bürkert
FLUID CONTROL SYSTEMS

Direct-acting 2/2-way or 3/2-way toggle valve

- Direct-acting media-separated valve up to DN 20
- Vibration-proof, block screwed solenoid system
- Energy-saving power reduction for all DC variants
- Increased safety due to electrical position feedback (optional)
- Robust, service-friendly manual override

Product variants described in the data sheet may differ from the product presentation and description.

Can be combined with

Type 1087
Timer,
form A according to
DIN EN 175301-803

Type 2518
Cable plug,
form A according to
DIN EN 175301-803

Type 1060
Electrical position feedback
for pneumatically operated
process valves

Type description

The 0131 valve is a direct-acting toggle valve. A variety of seal material combinations are available depending on the application. Thanks to the diaphragm separation between actuator and valve body, aggressive media such as acids and alkaline solutions can also be safely controlled. The assortment is rounded out with plastic housings made of PVC. The solenoids are moulded with a highly resistant chemical epoxy. “Kick and drop” electronics are moulded into all DC solenoid variants for reduced electrical power consumption. An optional electrical position feedback sensor reliably detects the switching position. Conformity for drinking water applications according to the German regulations (drinking water regulation) is available. Furthermore, variants of type 0131 are available that conform with DIN EN 45545:2016 (standard parts 2 and 5) – fire protection in railway vehicles.

DTS 1000010907 EN Version: R Status: RL (released | freigegeben | valide) printed: 13.02.2026

© Christian Bürkert GmbH & Co. KG, Subject to alteration

valvesgo.com

Table of contents

1. General technical data 3

1.1. Standard variant 3
1.2. Variant for railway application 4

2. Circuit functions 5

3. Approvals and conformities 5

3.1. General notes 5
3.2. Conformity 5
3.3. Standards 5
3.4. North America (USA/Canada) 5
3.5. Drinking water 6
3.6. Others 6
Fire protection on railway vehicles 6

4. Materials 6

4.1. Bürkert resistApp 6
4.2. 3/2-way brass variant 6
4.3. 3/2-way plastic variant with union nut and connection fitting 7
4.4. 2/2-way brass variant 7
4.5. 2/2-way plastic variant with true union nut and connection fitting 8
4.6. 2/2-way brass variant for railway application 8

5. Dimensions 9

5.1. 3/2-way brass variant 9
5.2. 3/2-way plastic variant with union nut and connection fitting 10
5.3. 2/2-way brass variant for standard and railway application 11
5.4. 2/2-way plastic variant with true union nut and connection fitting 12

6. Product connections 13

6.1. Port connection 13
Pin assignment 13

7. Ordering information 14

7.1. Bürkert eShop 14
7.2. Bürkert product filter 14
7.3. Bürkert Product Enquiry Form 14
7.4. Ordering chart 15
3/2-way variant, seal material EPDM 15
3/2-way variant, seal material NBR 16
3/2-way variant, seal material FKM 17
2/2-way variant, seal material EPDM 18
2/2-way variant, seal material FKM 18
2/2-way brass variant for railway application 19
7.5. Ordering chart accessories 20
Cable plug Type 2518, form A according to DIN EN 175301 - 803 20
Timer Type 1087, form A according to DIN EN 175301 - 803 20
Electrical position feedback Type 1060 with var. Code LF06 21

DTS 1000010907 EN Version: R Status: RL (released | freigegeben | valide) printed: 13.02.2026

valvesgo.com

1. General technical data

1.1. Standard variant

Product properties	
Dimensions	Further information can be found in chapter "5. Dimensions" on page 9.
Material	
Seal	NBR, EPDM, FKM
Body	PVC, brass
Coil	Epoxy
Valve inner parts	Further information can be found in chapter "4. Materials" on page 6.
Orifice	DN 10...DN 20
Circuit function	A, B, C, D, E, F Further information can be found in chapter "2. Circuit functions" on page 5.
Thermal insulation class of solenoid coil	Epoxy coil class H
Performance data	
Duty cycle	100 % continuous operation
Switching frequency	60/min with AC Max. 6/min with UC
Switching time [1.)]	Opening: 10...20 ms Closing: 40...60 ms
Electrical data	
Operating voltage [2.)]	24 V UC, 230 V UC, 24 V 50 Hz, 230 V 50 Hz (other voltages on request)
Power consumption	
Inrush	AC: 100...120 VA UC: 100 W
Hold	AC: 48 VA/16 W UC: 9 W
Voltage tolerance	± 10 %
Medium data	
Operating medium	Aggressive and non-aggressive liquids, neutral gases, aggressive gases according to their diffusion properties
Medium temperature (Body + Seal)	
With PVC/EPDM	- 10 °C...+ 50 °C
With PVC/FKM	- 10 °C...+ 50 °C
With Brass/EPDM	- 30 °C...+ 130 °C [2.)]
With Brass/FKM	- 10 °C...+ 130 °C [2.)]
With Brass/NBR	- 10 °C...+ 90 °C
Viscosity	Max. 37 mm^2/s
Product connections	
Electrical connection	Plug contacts according to DIN EN 175301 - 803 form A for cable plug **Type 2518** ▸ Further information can be found in chapter "Cable plug Type 2518, form A according to DIN EN 175301 - 803" on page 20.
Approvals and conformities	
Degree of protection	IP65 with cable plug
Environment and installation	
Installation position	Any, preferably actuator face up
Ambient temperature	Max. + 50 °C

1.) Measurement at + 20 °C, 6 bar at the valve inlet and free outlet, opening: pressure build-up 0...90 %, closing: pressure reduction 100...10 %
2.) Max. medium temperature for variants with high-performance electronics (encoding .../UC) is + 90 °C.

DTS 1000010907 EN Version: R Status: RL (released | freigegeben | valide) printed: 13.02.2026

valvesgo.com

1.2. Variant for railway application

Product properties	
Dimensions	Further information can be found in chapter "5. Dimensions" on page 9.
Material	
Seal	EPDM
Body	Brass
Coil	Epoxy
Orifice	DN 10...DN 20
Circuit function	A and B Further information can be found in chapter "2. Circuit functions" on page 5.
Thermal insulation class of solenoid coil	Epoxy coil class H
Performance data	
Duty cycle	100 % continuous operation
Switching frequency	Max. 6/min
Switching time [1.)]	Open: 10...20 ms Close: 40...60 ms
Electrical data	
Operating voltage [2.)]	24 V UC, 110 V UC, 230 V UC, (36 V UC on request)
Power consumption	
Inrush	100 W
Hold	9 W (after 500 ms)
Voltage tolerance	± 30 %
Current consumption at 30 % increased operating voltage	31.2 V = 7.60 A 143.0 V = 1.80 A 299.0 V = 0.76 A
Medium data	
Operating medium	Neutral gases and liquids (e.g. compressed air, drinking water)
Medium temperature	- 30 °C...+ 80 °C
Viscosity	Max. 37 mm^2/s
Product connections	
Electrical connection	Plug contacts according to DIN EN 175301 - 803 form A for cable plug **Type 2518** ▸ Further information can be found in chapter "Cable plug Type 2518, form A according to DIN EN 175301 - 803" on page 20.
Approvals and conformities	
Degree of protection	IP65 with cable plug
North America (USA/Canada)	Further information can be found in chapter "3.4. North America (USA/Canada)" on page 5.
Drinking water	Further information can be found in chapter "3.5. Drinking water" on page 6.
Others	Further information can be found in chapter "3.6. Others" on page 6.
Environment and installation	
Installation position	As required, preferably with actuator upright
Max. system pressure in flow direction	8 bar (switching pressure max. 3 bar depending on orifice)
Ambient temperature	- 30 °C...+ 70 °C

1.) Measurement at + 20 °C, 6 bar at the valve outlet, opening: pressure build-up 0...90 %, closing: pressure reduction 100...10 %
2.) UC = Universal Current, AC and DC possible

DTS 1000010907 EN Version: R Status: RL (released | freigegeben | valide) printed: 13.02.2026

valvesgo.com

2. Circuit functions

Symbol	Description
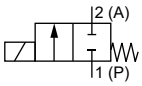	**Circuit function A (CF A)** 2/2-way solenoid valve Direct-acting Normally closed
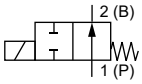	**Circuit function B (CF B)** 2/2-way solenoid valve Direct-acting Normally open
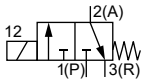	**Circuit function C (CF C)** 3/2-way solenoid valve Direct-acting Normally closed
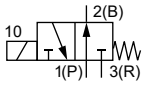	**Circuit function D (CF D)** 3/2-way solenoid valve Direct-acting Normally open
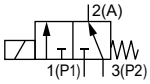	**Circuit function E (CF E)** 3/2-way mixing valve (solenoid valve)
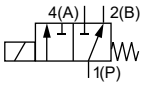	**Circuit function F (CF F)** 3/2-way distribution valve (solenoid valve) Direct-acting

3. Approvals and conformities

3.1. General notes

- The approvals and conformities listed below must be stated when making enquiries. This is the only way to ensure that the product complies with all required specifications.
- Not all available variants can be supplied with the below mentioned approvals or conformities.

3.2. Conformity

In accordance with the Declaration of Conformity, the product is compliant with the EU Directives.

3.3. Standards

The applied standards which are used to demonstrate compliance with the EU Directives are listed in the EU-Type Examination Certificate and/or the EU Declaration of Conformity.

3.4. North America (USA/Canada)

Approval	Description
c UL us	**Optional (valid for coils): UL Recognized for the USA and Canada** The coils are UL Recognized for the USA and Canada according to: • UL 429 (electrically operated valves) • CAN/CSA-C22.2 No. 139

DTS 1000010907 EN Version: R Status: RL (released | freigegeben | valide) printed: 13.02.2026

valvesgo.com

3.5. Drinking water

Conformity	Description
H_2O	**Suitable for use in drinking water applications** The materials comply with the assessment principles (UBA) for materials in contact with drinking water (Trinkwasserv). **Brass body:** PF36: Suitable for products with a maximum temperature of + 60 °C (warm water)

3.6. Others

Fire protection on railway vehicles

Approval	Description
DIN EN 45545	**Optional: Fire protection on railway vehicles in accordance with DIN EN 45545 applicable parts 2 and 5: requirements for fire behaviour of materials and components** The products comply with the fire protection requirements in accordance with applicable parts 2 and 5 of DIN EN 45545 for use in the interior of railway vehicles for operating classes 1 - 3 (OC1 - 3) in conjunction with hazard levels 1 - 2 (HL1 - 2) in accordance with the manufacturer's declaration.

4. Materials

4.1. Bürkert resistApp

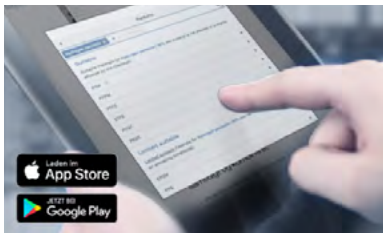

Bürkert resistApp – Chemical resistance chart

You want to ensure the reliability and durability of the materials in your individual application case? Verify your combination of media and materials on our website or in our resistApp.

Start chemical resistance check

4.2. 3/2-way brass variant

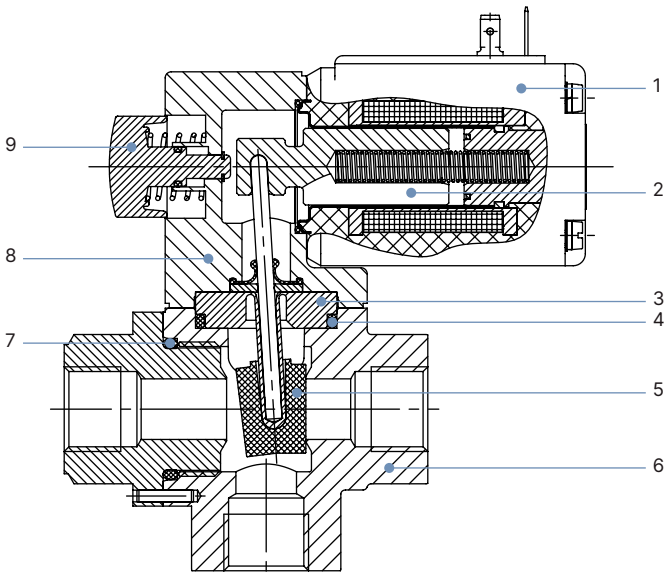

No.	Element	Material
1	Coil	Epoxy
2	Plunger	Stainless steel 1.4105
3	Toggle pin	PTFE
4	O-ring	NBR, FKM, EPDM
5	Closing body	NBR, FKM, EPDM
6	Housing	Brass
7	O-ring	NBR, FKM, EPDM
8	Lateral flange	PC
9	Manual override with locking function	

DTS 1000010907 EN Version: R Status: RL (released | freigegeben | valide) printed: 13.02.2026

valvesgo.com

4.3. 3/2-way plastic variant with union nut and connection fitting

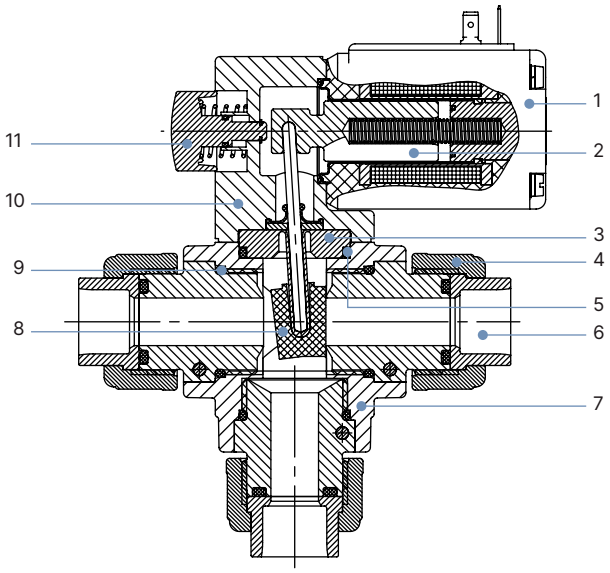

No.	Element	Material
1	Coil	Epoxy
2	Plunger	Stainless steel 1.4105
3	Toggle pin	PTFE
4	Union nut	PVC
5	O-ring	FKM, EPDM
6	Connection fitting	True union, threaded, weld end
7	Body	PVC
8	Closing body	FKM, EPDM
9	O-ring	FKM, EPDM
10	Lateral flange	PC
11	Manual override with locking function	

4.4. 2/2-way brass variant

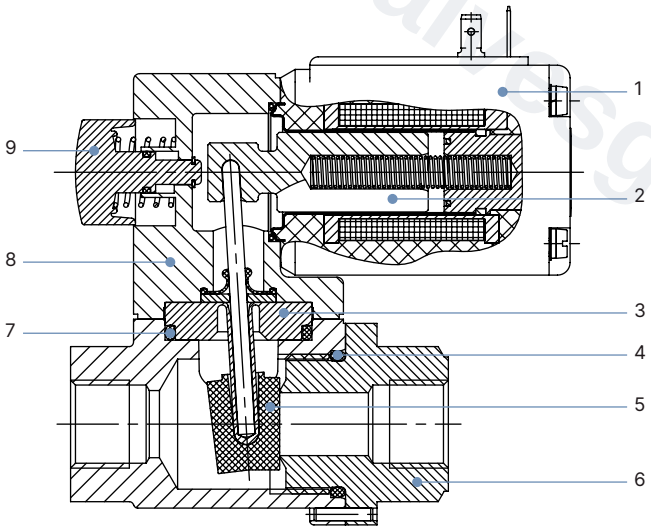

No.	Element	Material
1	Coil	Epoxy
2	Plunger	Stainless steel 1.4105
3	Toggle pin	PTFE
4	O-ring	NBR, FKM, EPDM
5	Closing body	NBR, FKM, EPDM
6	Body	Brass
7	O-ring	NBR, FKM, EPDM
8	Lateral flange	PC
9	Manual override with locking function	

DTS 1000010907 EN Version: R Status: RL (released | freigegeben | valide) printed: 13.02.2026

valvesgo.com

4.5. 2/2-way plastic variant with true union nut and connection fitting

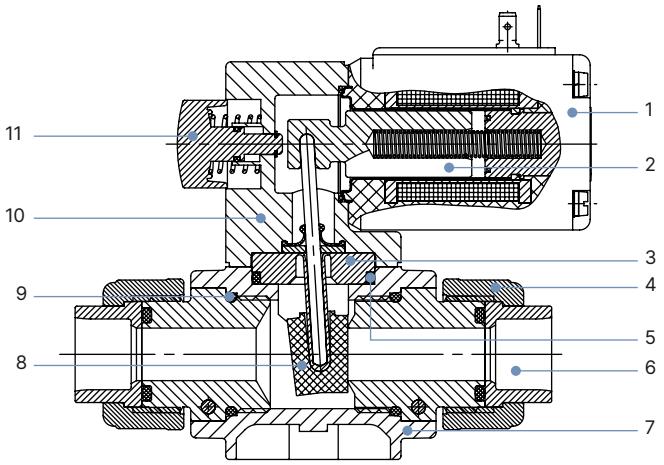

No.	Element	Material
1	Coil	Epoxy
2	Plunger	Stainless steel 1.4105
3	Toggle pin	PTFE
4	True union nut	PVC
5	O-ring	FKM, EPDM
6	Connection fitting	True union, threaded, weld end
7	Body	PVC
8	Closing body	FKM, EPDM
9	O-ring	FKM, EPDM
10	Lateral flange	PC
11	Manual overide with locking function	

4.6. 2/2-way brass variant for railway application

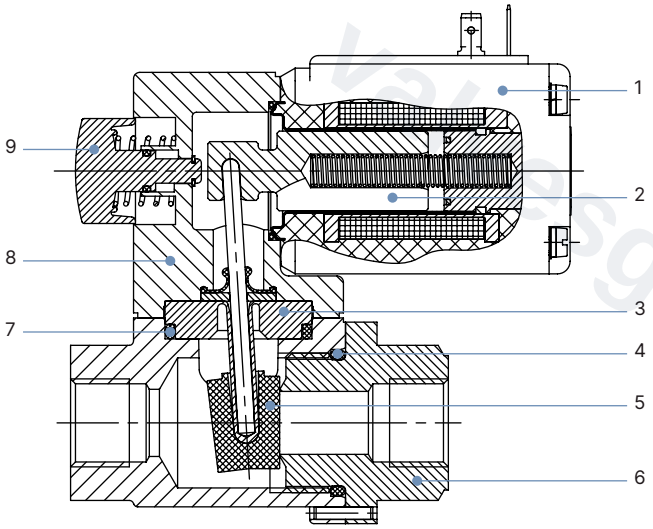

No.	Element	Material
1	Coil	Epoxy
2	Plunger	Stainless steel 1.4105
3	Toggle pin	PTFE [1.)]
4	O-ring	EPDM [2.)]
5	Closing body	EPDM [2.)]
6	Body	Brass
7	O-ring	EPDM [2.)]
8	Lateral flange	PC
9	Manual override with locking function	

1.) PTFE suitable for drinking water
2.) EPDM with KTW and W270 certificate

DTS 1000010907 EN Version: R Status: RL (released | freigegeben | valide) printed: 13.02.2026

valvesgo.com

5. Dimensions

5.1. 3/2-way brass variant

Note:
Dimensions in mm

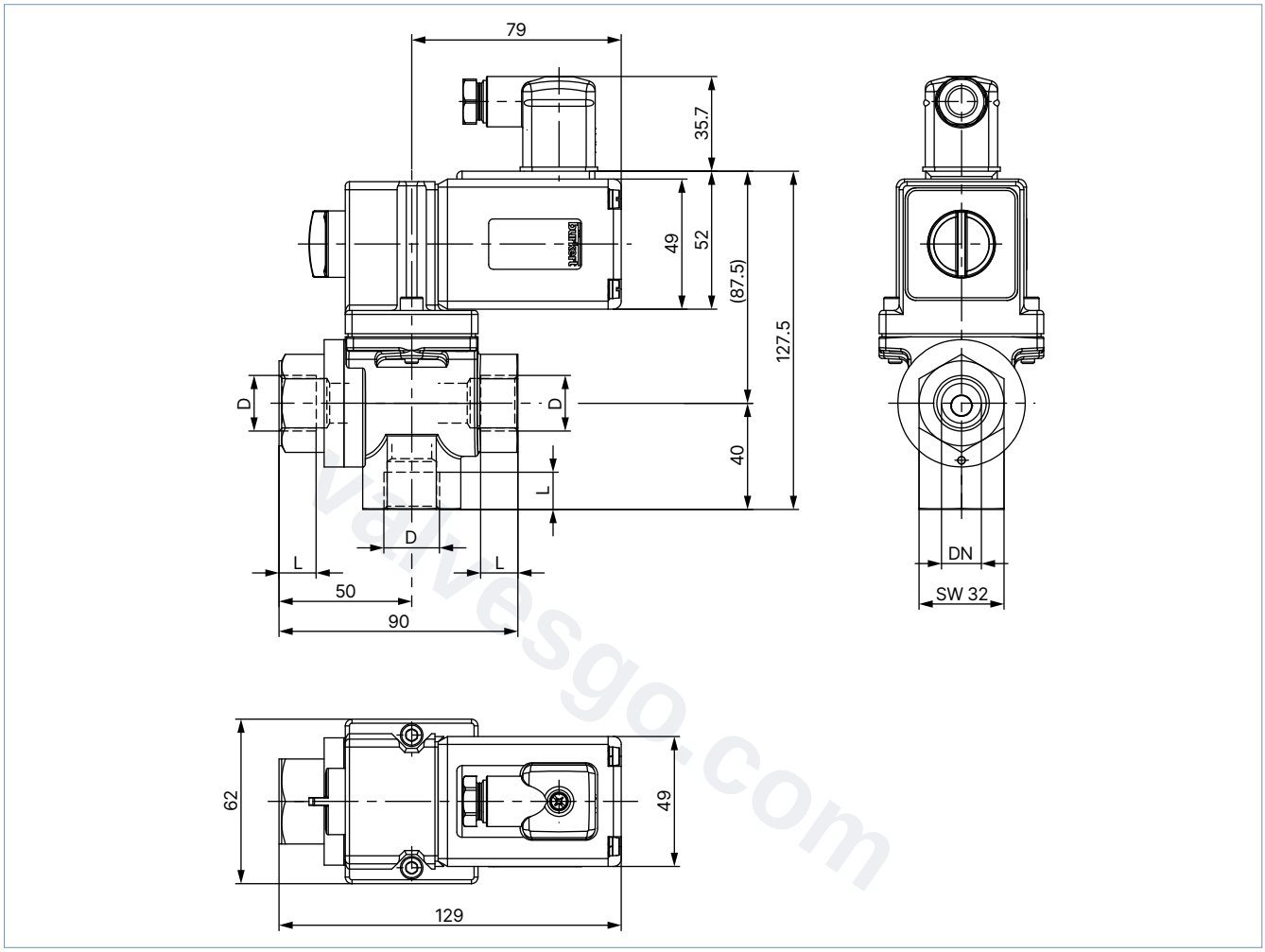

Material	DN	Connection	D	L
Brass	10	Threaded	G ⅜	12
Brass	15	Threaded	G ½	14
Brass	20	Threaded	G ¾	16

DTS 1000010907 EN Version: R Status: RL (released | freigegeben | valide) printed: 13.02.2026

valvesgo.com

5.2. 3/2-way plastic variant with union nut and connection fitting

Note:
Dimensions in mm

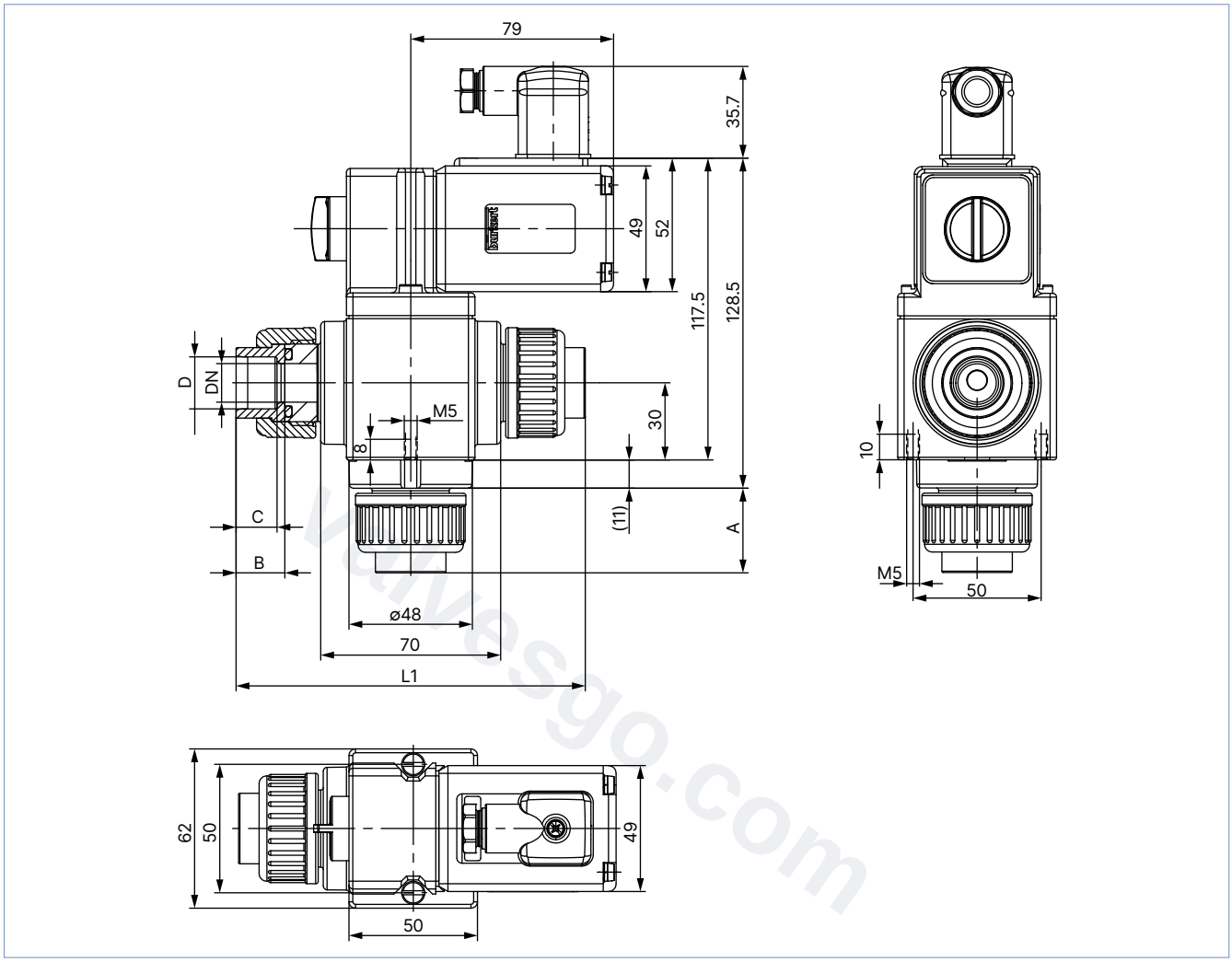

Material	DN	Connection	A	B	C	D	L 1
PVC	10	True union	30	17	14	Ø 16.2	130
		Threaded connection	30	17	12	G ⅜	130
		Threaded connection	30	17	12	NPT ⅜	130
	10 (with port for DN 15)	True union	32	19	16	Ø 20.2	134
		Threaded connection	32	19	13	G ½	134
		Threaded connection	32	19	14	NPT ½	134
	15	True union	33	19	16	Ø 20.2	136
		Threaded connection	33	19	13	G ½	136
		Threaded connection	33	19	14	NPT ½	136
	15 (with port for DN 20)	True union	36	22	19	Ø 25.2	142
		Threaded connection	36	22	15	G ¾	142
		Threaded connection	36	22	16	NPT ¾	142
	20	True union	37	22	19	Ø 25.2	144
		Threaded connection	37	22	15	G ¾	144
		Threaded connection	37	22	16	NPT ¾	144

DTS 1000010907 EN Version: R Status: RL (released | freigegeben | valide) printed: 13.02.2026

valvesgo.com

5.3. 2/2-way brass variant for standard and railway application

Note:
Dimensions in mm

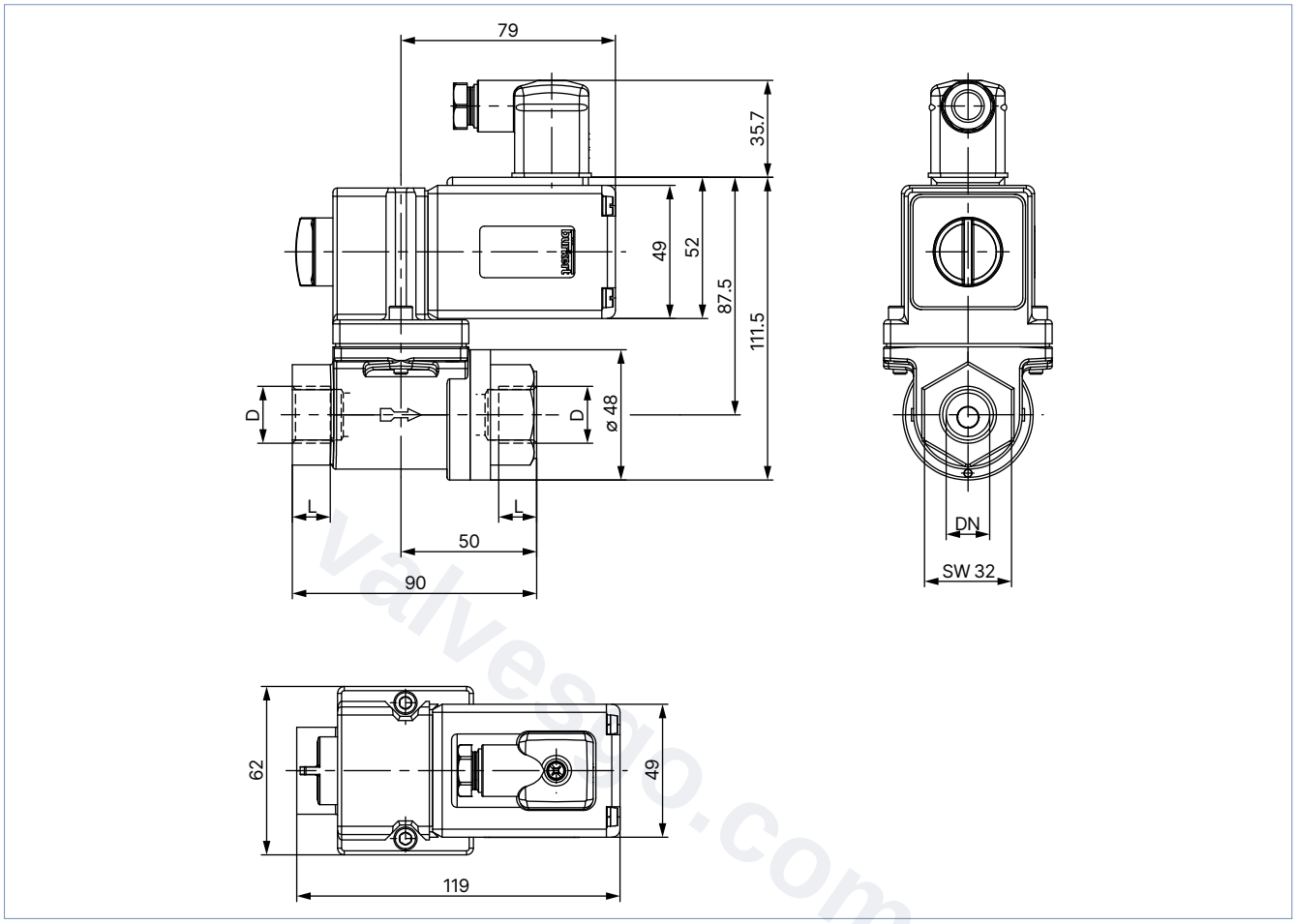

Material	DN	Connection	D	L
Brass	10	Threaded	G ⅜	12
Brass	15	Threaded	G ½	14
Brass	20	Threaded	G ¾	16

DTS 1000010907 EN Version: R Status: RL (released | freigegeben | valide) printed: 13.02.2026

valvesgo.com

5.4. 2/2-way plastic variant with true union nut and connection fitting

Note:
Dimensions in mm

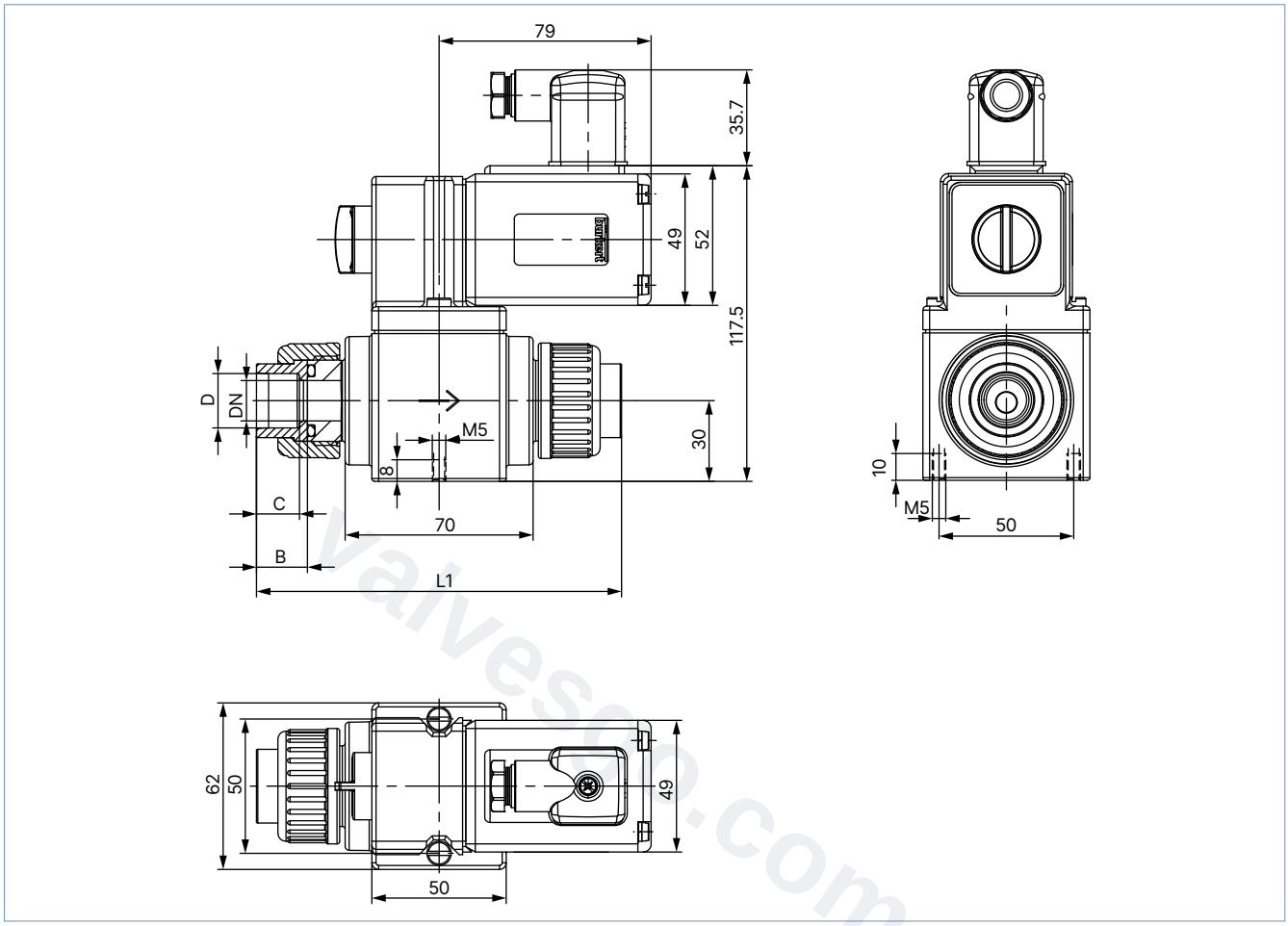

Material	DN	Connection	B	C	D	L 1	L 2
PVC	10	True union	17	14	Ø 16.2	130	99.5
		Threaded	17	12	G ⅜	130	99.5
		Threaded	17	12	NPT ⅜	130	99.5
PVC	10 (with port for DN 15)	True union	19	16	Ø 20.2	134	101.5
		Threaded	19	13	G ½	134	101.5
		Threaded	19	14	NPT ½	134	101.5
	15	True union	19	16	Ø 20.2	136	103.0
		Threaded	19	13	G ½	136	103.0
		Threaded	19	14	NPT ½	136	103.0
	15 (with port for DN 20)	True union	22	19	Ø 25.2	142	106.0
		Threaded	22	15	G ¾	142	106.0
		Threaded	22	16	NPT ¾	142	106.0
	20	True union	22	19	Ø 25.2	144	107.0
		Threaded	22	15	G ¾	144	107.0
		Threaded	22	16	NPT ¾	144	107.0

DTS 1000010907 EN Version: R Status: RL (released | freigegeben | valide) printed: 13.02.2026

valvesgo.com

6. Product connections

6.1. Port connection

Pin assignment

Note:
The pin assignment (marked No. 1, 2 and 3 in the drawing) depends on the circuit function. In the table, compare the respective pin assignment with the corresponding circuit function.

Circuit function	Connection 1	Connection 2	Connection 3	3/2-way plastic variant	3/2-way brass variant
C	R	P	A	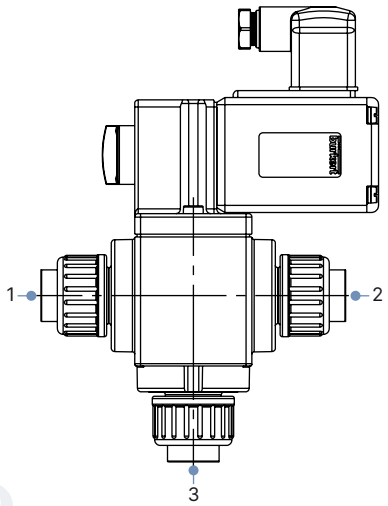	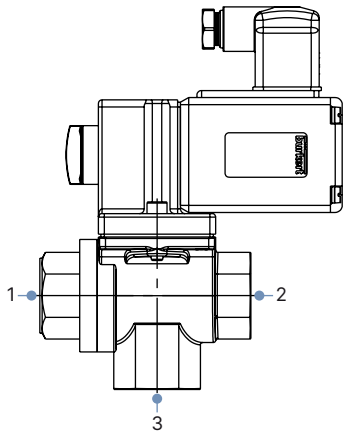
D	P	R	B		
E	P2	P1	A		
F	B	A	P		

DTS 1000010907 EN Version: R Status: RL (released | freigegeben | valide) printed: 13.02.2026

valvesgo.com

valvesgo.com

7. Ordering information

7.1. Bürkert eShop

Bürkert eShop – Easy ordering and quick delivery

You want to find your desired Bürkert product or spare part quickly and order directly? Our online shop is available for you 24/7. Sign up and enjoy all the benefits.

Order online now

7.2. Bürkert product filter

Bürkert product filter – Get quickly to the right product

You want to select products comfortably based on your technical requirements?
Use the Bürkert product filter and find suitable articles for your application quickly and easily.

Try out our product filter

7.3. Bürkert Product Enquiry Form

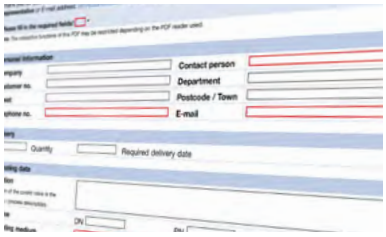

Bürkert Product Enquiry Form – Your enquiry quickly and compactly

Would you like to make a specific product enquiry based on your technical requirements? Use our Product Enquiry Form for this purpose. There you will find all the relevant information for your Bürkert contact. This will enable us to provide you with the best possible advice.

Fill out the form now

DTS 1000010907 EN Version: R Status: RL (released | freigegeben | valide) printed: 13.02.2026

valvesgo.com

7.4. Ordering chart

3/2-way variant, seal material EPDM

Note:
Further information on the circuit functions can be found in chapter "2. Circuit functions" on page 5.

Circuit function	Port connection	Orifice	K_v value water	Pressure range	Body material	Article no.			
						024 / AC/DC	230 / AC/DC	024/50	230/50
	[inch resp. mm]	[mm]	[m³/h]	[bar]		[V/Hz]	[V/Hz]	[V/Hz]	[V/Hz]
CF C 3/2-way solenoid valve Direct-acting Normally closed 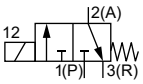	G ⅜	10	2.0	0...1	PVC	o. r.	o. r.	–	–
	G ½		2.0	0...1		o. r.	o. r.	–	–
	True union Ø 16		2.0	0...1		o. r.	o. r.	–	–
	True union Ø 20		2.0	0...1		o. r.	o. r.	–	–
	G ½	15	4.0	0...0.5		o. r.	o. r.	–	–
	True union Ø 20		4.0	0...0.5		o. r.	o. r.	–	–
	True union Ø 25		4.0	0...0.5		o. r.	o. r.	–	–
	G ¾	20	5.0	0...0.25		o. r.	o. r.	–	–
	True union Ø 25		5.0	0...0.25		o. r.	o. r.	–	–
CF D 3/2-way solenoid valve Direct-acting Normally open 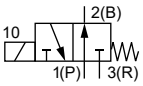	G ⅜	10	2.0	0...1		o. r.	o. r.	o. r.	o. r.
	G ½		2.0	0...1		o. r.	o. r.	o. r.	o. r.
	True union Ø 16		2.0	0...1		o. r.	o. r.	o. r.	o. r.
	True union Ø 20		2.0	0...1		o. r.	o. r.	o. r.	o. r.
	G ½	15	4.0	0...0.5		o. r.	o. r.	o. r.	o. r.
	True union Ø 20		4.0	0...0.5		o. r.	o. r.	o. r.	o. r.
	True union Ø 25		4.0	0...0.5		o. r.	o. r.	o. r.	o. r.
	G ¾	20	5.0	0...0.25		o. r.	o. r.	o. r.	o. r.
	True union Ø 25		5.0	0...0.25		o. r.	o. r.	o. r.	o. r.
CF F 3/2-way distribution valve (solenoid valve) Direct-acting 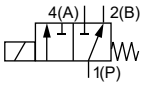	G ⅜	10	2.0	0...1		o. r.	o. r.	o. r.	o. r.
	G ½		2.0	0...1		o. r.	o. r.	076537	o. r.
	True union Ø 16		2.0	0...1		055770	o. r.	064266	052546
	True union Ø 20		2.0	0...1		o. r.	o. r.	o. r.	o. r.
	G ½	15	4.0	0...0.5		025876	o. r.	o. r.	o. r.
	True union Ø 20		4.0	0...0.5		049883	o. r.	058279	052071
	True union Ø 25		4.0	0...0.5		o. r.	o. r.	o. r.	o. r.
	G ¾	20	5.0	0...0.25		o. r.	o. r.	o. r.	o. r.
	True union Ø 25		5.0	0...0.25		067076	o. r.	040921	054564
CF C 3/2-way solenoid valve Direct-acting Normally closed 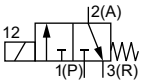	G ⅜	10	2.0	0...1	Brass	o. r.	o. r.	–	–
	G ½	15	4.0	0...0.5		046648	o. r.	–	–
	G ¾	20	5.0	0...0.25		o. r.	o. r.	–	–
CF D 3/2-way solenoid valve Direct-acting Normally open 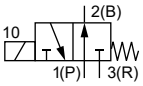	G ⅜	10	2.0	0...1		o. r.	o. r.	o. r.	o. r.
	G ½	15	4.0	0...0.5		o. r.	o. r.	o. r.	o. r.
	G ¾	20	5.0	0...0.25		o. r.	o. r.	o. r.	o. r.
CF F 3/2-way distribution valve (solenoid valve) Direct-acting 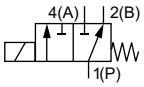	G ⅜	10	2.0	0...1	Brass	o. r.	o. r.	o. r.	o. r.
	G ½	15	4.0	0...0.5		o. r.	o. r.	o. r.	053634
	G ¾	20	5.0	0...0.25		o. r.	o. r.	o. r.	o. r.

o. r. = on request
– = not available

DTS 1000010907 EN Version: R Status: RL (released | freigegeben | valide) printed: 13.02.2026

valvesgo.com

3/2-way variant, seal material NBR

Note:
Further information on the circuit functions can be found in chapter "2. Circuit functions" on page 5.

Circuit function	Port connection	Orifice	K_v value water	Pressure range	Body material	Article no.			
						024 / AC/DC	230 / AC/DC	024/50	230/50
	[inch resp. mm]	[mm]	[m³/h]	[bar]		[V/Hz]	[V/Hz]	[V/Hz]	[V/Hz]
CF C 3/2-way solenoid valve Direct-acting Normally closed 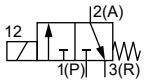	G ⅜	10	2.0	0...1	Brass	048997	059302	–	–
	G ½	15	4.0	0...0.5		062737	062481	–	–
	G ¾	20	5.0	0...0.25		o. r.	049470	–	–
CF D 3/2-way solenoid valve Direct-acting Normally open 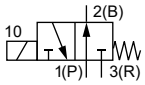	G ⅜	10	2.0	0...1		o. r.	o. r.	o. r.	o. r.
	G ½	15	4.0	0...0.5		021964	o. r.	o. r.	051556
	G ¾	20	5.0	0...0.25		o. r.	o. r.	o. r.	o. r.
CF F 3/2-way distribution valve (solenoid valve) Direct-acting 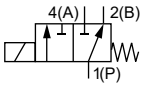	G ⅜	10	2.0	0...1		064025	o. r.	o. r.	062960
	G ½	15	4.0	0...0.5		o. r.	o. r.	045916	062124
	G ¾	20	5.0	0...0.25		140798	o. r.	062119	079567

o. r. = on request
– = not available

DTS 1000010907 EN Version: R Status: RL (released | freigegeben | valide) printed: 13.02.2026

valvesgo.com

valvesgo.com

3/2-way variant, seal material FKM

Note:
Further information on the circuit functions can be found in chapter "2. Circuit functions" on page 5.

Circuit function	Port connection	Orifice	K_v value water	Pressure range	Body material	Article no.			
						024 / AC/DC	230 / AC/DC	024/50	230/50
	[inch resp. mm]	[mm]	[m³/h]	[bar]		[V/Hz]	[V/Hz]	[V/Hz]	[V/Hz]
CF C 3/2-way solenoid valve Direct-acting Normally closed 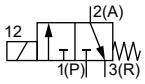	G ⅜	10	2.0	0...1	PVC	o. r.	o. r.	–	–
	G ½					o. r.	o. r.	–	–
	True union Ø 16					o. r.	o. r.	–	–
	True union Ø 20					o. r.	o. r.	–	–
	G ½	15	4.0	0...0.5		o. r.	o. r.	–	–
	True union Ø 20					o. r.	o. r.	–	–
	True union Ø 25					o. r.	o. r.	–	–
	G ¾	20	5.0	0...0.25		o. r.	o. r.	–	–
	True union Ø 25					o. r.	o. r.	–	–
CF D 3/2-way solenoid valve Direct-acting Normally open 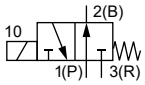	G ⅜	10	2.0	0...1		o. r.	o. r.	o. r.	o. r.
	G ½					o. r.	o. r.	o. r.	o. r.
	True union Ø 16					o. r.	o. r.	o. r.	o. r.
	True union Ø 20					o. r.	o. r.	o. r.	172866
	G ½	15	4.0	0...0.5		o. r.	o. r.	o. r.	o. r.
	True union Ø 20					o. r.	o. r.	o. r.	o. r.
	True union Ø 25		4.0	0...0.5		o. r.	o. r.	o. r.	o. r.
	G ¾	20	5.0	0...0.25		o. r.	o. r.	o. r.	o. r.
	True union Ø 25					o. r.	o. r.	o. r.	o. r.
CF F 3/2-way distribution valve (solenoid valve) Direct-acting 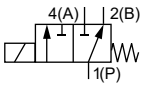	G ⅜	10	2.0	0...1		065194	o. r.	o. r.	052183
	G ½					o. r.	o. r.	o. r.	o. r.
	True union Ø 16					058362	o. r.	o. r.	052619
	True union Ø 20					o. r.	o. r.	o. r.	o. r.
	G ½	15	4.0	0...0.5		o. r.	o. r.	o. r.	o. r.
	True union Ø 20					058710	o. r.	o. r.	050904
	True union Ø 25					o. r.	020687	o. r.	042470
	G ¾	20	5.0	0...0.25		o. r.	o. r.	o. r.	o. r.
	True union Ø 25					058363	o. r.	068352	066280
CF C 3/2-way solenoid valve Direct-acting Normally closed 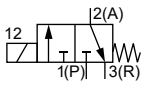	G ⅜	10	2.0	0...1	Brass	o. r.	o. r.	–	–
	G ½	15	4.0	0...0.5		o. r.	o. r.	–	–
	G ¾	20	5.0	0...0.25		o. r.	o. r.	–	–
CF D 3/2-way solenoid valve Direct-acting Normally open 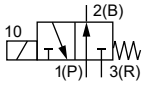	G ⅜	10	2.0	0...1		o. r.	o. r.	o. r.	o. r.
	G ½	15	4.0	0...0.5		o. r.	o. r.	o. r.	o. r.
	G ¾	20	5.0	0...0.25		o. r.	o. r.	o. r.	o. r.
CF F 3/2-way distribution valve (solenoid valve) Direct-acting 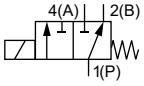	G ⅜	10	2.0	0...1		o. r.	o. r.	o. r.	o. r.
	G ½	15	4.0	0...0.5		053050	069814	o. r.	058915
	G ¾	20	5.0	0...0.25		o. r.	o. r.	o. r.	o. r.

o. r. = on request
– = not available

DTS 1000010907 EN Version: R Status: RL (released | freigegeben | valide) printed: 13.02.2026

valvesgo.com

2/2-way variant, seal material EPDM

Note:
Further information on the circuit functions can be found in chapter "2. Circuit functions" on page 5.

Circuit function	Port connection	Orifice	K_V value water	Pressure range	Body material	Article no.			
						024 / AC/DC	230 / AC/DC	024/50	230/50
	[inch resp. mm]	[mm]	[m³/h]	[bar]		[V/Hz]	[V/Hz]	[V/Hz]	[V/Hz]
CF A 2/2-way solenoid valve Direct-acting Normally closed 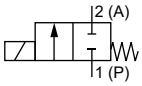	G ⅜	10	2.0	0...3	Brass	o. r.	o. r.	o. r.	o. r.
	G ½	15	4.5	0...1		o. r.	o. r.	o. r.	056281
	G ¾	20	6.0	0...0.5		o. r.	o. r.	o. r.	o. r.
CF B 2/2-way solenoid valve Direct-acting Normally open 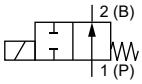	G ⅜	10	2.0	0...2		o. r.	o. r.	o. r.	o. r.
	G ½	15	4.5	0...1		049793	o. r.	o. r.	o. r.
	G ¾	20	6.0	0...0.5		280187	289458	o. r.	o. r.

o. r. = on request

2/2-way variant, seal material FKM

Note:
Further information on the circuit functions can be found in chapter "2. Circuit functions" on page 5.

Circuit function	Port connection	Orifice	K_V value water	Pressure range	Body material	Article no.			
						024 / AC/DC	230 / AC/DC	024/50	230/50
	[inch resp. mm]	[mm]	[m³/h]	[bar]		[V/Hz]	[V/Hz]	[V/Hz]	[V/Hz]
CF A 2/2-way solenoid valve Direct-acting Normally closed 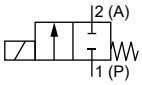	G ⅜	10	2.0	0...3	PVC	o. r.	o. r.	o. r.	o. r.
	G ½		2.0	0...3		086273	o. r.	o. r.	o. r.
	True union Ø 16		2.0	0...3		047915	o. r.	052953	050443
	True union Ø 20		2.0	0...3		056060	o. r.	055817	056789
	G ½	15	4.5	0...1		047398	o. r.	o. r.	056663
	True union Ø 20		4.5	0...1		053882	o. r.	051641	050787
	True union Ø 25		4.5	0...1		o. r.	o. r.	o. r.	058369
	G ¾	20	6.0	0...0.5		o. r.	o. r.	o. r.	056794
	True union Ø 25		6.0	0...0.5		056495	o. r.	050551	051351
CF B 2/2-way solenoid valve Direct-acting Normally open 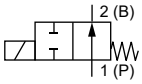	G ⅜	10	2.0	0...2		o. r.	o. r.	–	–
	G ½		2.0	0...2		o. r.	o. r.	–	–
	True union Ø 16		2.0	0...2		058361	053221	–	–
	True union Ø 20		2.0	0...2		o. r.	o. r.	–	–
	G ½	15	4.5	0...1		o. r.	o. r.	–	–
	True union Ø 20		4.5	0...1		047503	045439	–	–
	True union Ø 25		4.5	0...1		o. r.	o. r.	–	–
	G ¾	20	6.0	0...0.5		o. r.	o. r.	–	–
	True union Ø 25		6.0	0...0.5		051969	o. r.	–	–

DTS 1000010907 EN Version: R Status: RL (released | freigegeben | valide) printed: 13.02.2026

valvesgo.com

Circuit function	Port connection	Orifice	K_v value water	Pressure range	Body material	Article no.			
						024 / AC/DC	230 / AC/DC	024/50	230/50
	[inch resp. mm]	[mm]	[m³/h]	[bar]		[V/Hz]	[V/Hz]	[V/Hz]	[V/Hz]
CF A 2/2-way solenoid valve Direct-acting Normally closed 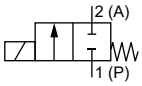	G ⅜	10	2.0	0...3	Brass	054053	o. r.	048664	044502
	G ½	15	4.5	0...1		025537	o. r.	o. r.	040549
	G ¾	20	6.0	0...0.5		069752	o. r.	o. r.	048622
CF B 2/2-way solenoid valve Direct-acting Normally open 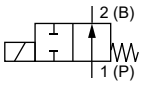	G ⅜	10	2.0	0...2		o. r.	o. r.	o. r.	o. r.
	G ½	15	4.5	0...1		059360	046643	o. r.	o. r.
	G ¾	20	6.0	0...0.5		o. r.	o. r.	o. r.	o. r.

o. r. = on request
– = not available

2/2-way brass variant for railway application

Note:
Further information on the circuit functions can be found in chapter "2. Circuit functions" on page 5.

Circuit function	Port connection	Orifice	K_v value water	Pressure range	Body material	Article no.			
						024 / AC/DC	036 / AC/DC	110 / AC/DC	230 / AC/DC
	[inch resp. mm]	[mm]	[m³/h]	[bar]		[V/Hz]	[V/Hz]	[V/Hz]	[V/Hz]
CF A 2/2-way solenoid valve Direct-acting Normally closed 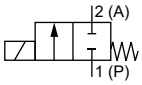	G ⅜	10	2.0	0...3	Brass	246791	o. r.	246792	246793
	G ½	15	4.5	0...1		246789	o. r.	242884	246790
	G ¾	20	6.0	0...0.5		239361	o. r.	239348	246787
CF B 2/2-way solenoid valve Direct-acting Normally open 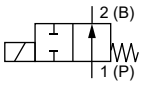	G ⅜	10	2.0	0...2		340223	o. r.	o. r.	o. r.
	G ½	15	4.5	0...1		o. r.	o. r.	o. r.	o. r.
	G ¾	20	6.0	0...0.5		o. r.	o. r.	o. r.	o. r.

o. r. = on request

DTS 1000010907 EN Version: R Status: RL (released | freigegeben | valide) printed: 13.02.2026

valvesgo.com

7.5. Ordering chart accessories

Cable plug Type 2518, form A according to DIN EN 175301 - 803

Note:

- Dimensions in mm
- For further variants see data sheet **Type 2518** ▶.

Cable plug	Dimensions	Variant	Voltage	Article no.
	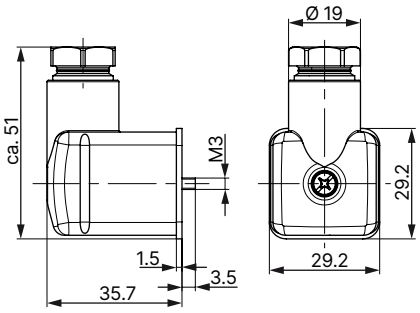	Without wiring (AC/DC)	0...250 V AC/DC	314802
		With LED (AC/DC)	12...24 V AC/DC	314812
		With LED and varistor (AC/DC)	12...24 V AC/DC	314820
		With rectifier, LED and varistor	12...24 V AC/DC	314816
		Without wiring (AC/DC) with silicone seal for higher ambient temperature, e.g. steam variant (NA07)	0...250 V AC/DC	361687

Timer Type 1087, form A according to DIN EN 175301 - 803

Note:
Refer to data sheet **Type 1087** ▶ for more information about the timer.

Timer	Approval	Product code	Voltage range	Article no.
Analogue variant	–	1087-A-BCH-UC - 28	10...30 V AC/DC	348828
	–	1087-A-BDK-UC - 28	24...240 V AC/DC	348829
	cURus	1087-A-BCH-UC- 28*PU01	10...30 V AC/DC	348906
	cURus	1087-A-BDK-UC- 28*PU01	24...240 V AC/DC	348907
Digital variant	–	1087-A-BFW-UC - 29	10...48 V AC/DC	348830
	–	1087-A-BDX-UC - 29	110...240 V AC/DC	348831
	cURus	1087-A-BFW-UC- 29*PU01	10...48 V AC/DC	348908
	cURus	1087-A-BDX-UC- 29*PU01	110...240 V AC/DC	348909

DTS 1000010907 EN Version: R Status: RL (released | freigegeben | valide) printed: 13.02.2026

valvesgo.com

Electrical position feedback Type 1060 with var. Code LF06

Note:

- Possible for standard and railway application
- Refer to data sheet **Type 1060** ▶ for more information about the position feedback.
- **The position feedback is mounted on the coil and cannot be ordered separately.**
- Please contact your Bürkert representative if you are interested in a valve Type 0131 with position feedback.
- Contact your Bürkert partner for a valve Type 0131 with position feedback indicator.

Position feedback	Voltages [1.)] with feedback
	24 V/UC
	24 V/50 Hz
	230 V/UC
	230 V/50 Hz

1.) Other voltages are available on request.

valvesgo.com

DTS 1000010907 EN Version: R Status: RL (released | freigegeben | valide) printed: 13.02.2026

valvesgo.com