bürkert
FLUID CONTROL SYSTEMS

MAN 1000338245 EN Version: G Status: RL (released | freigegeben) printed: 22.07.2026

Type 0131

2/2- or 3/2-way solenoid valve

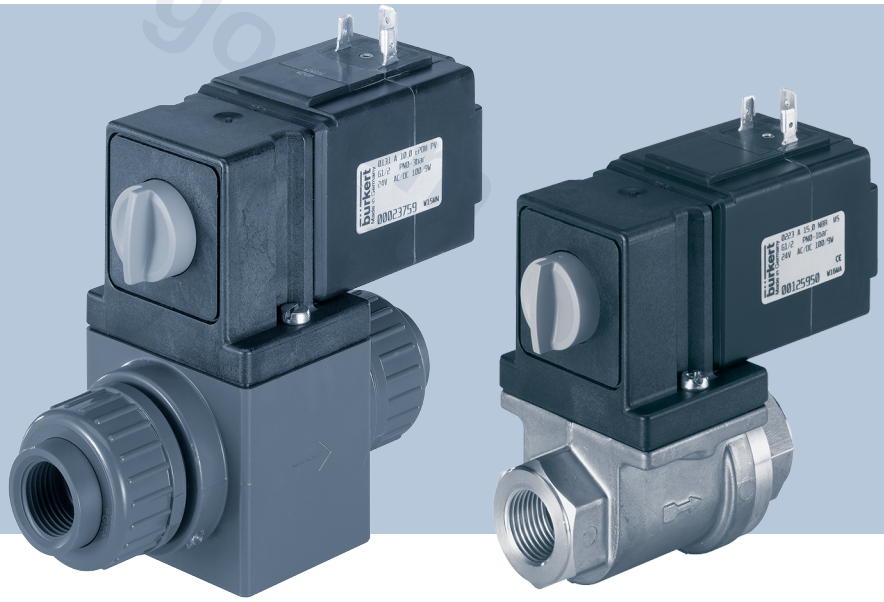

Operating Instructions

valvesgo.com

MAN 1000338245 EN Version: G Status: RL (released | freigegeben) printed: 22.07.2026

valvesgo.com

We reserve the right to make technical changes without notice.
© Bürkert Werke GmbH & Co. KG 2014-2026
Technical documentation 2607/09_GBen_00893158_951577867_18014399461527819 / Original DE

Table of contents

1	**About this document**	**4**
1.1	Symbols	4
1.2	Terms and abbreviations	5
1.3	Manufacturer	5
2	**Safety**	**6**
2.1	Intended use	6
2.2	Basic safety instructions	6
3	**Technical data**	**8**
3.1	Operating conditions	8
3.2	Usage conditions	11
3.3	Standards and directives	12
3.4	Type label	13
4	**Installation**	**14**
4.1	Safety instructions	14
4.2	Preparatory work	14
4.3	Variants approved for drinking water (only with variable code PF36+NG72)	15
4.4	Installation	16
4.5	Manual override	17
4.6	Electrical connection of cable plug	17
5	**Maintenance, troubleshooting**	**19**
5.1	Safety instructions	19
5.2	Troubleshooting	19
6	**Spare parts**	**20**
6.1	Ordering spare parts	20
7	**Logistics**	**21**
7.1	Transport and storage	21
7.2	Return	21
7.3	Disposal	21

MAN 1000338245 EN Version: G Status: RL (released | freigegeben) printed: 22.07.2026

valvesgo.com

valvesgo.com

1 About this document

The document is an important part of the product and guides the user to safe installation and operation. The information and instructions in this document are binding for the use of the product.

- Before using the product for the first time, read and observe the whole safety chapter.
- Before starting any work on the product, read and observe the respective sections of the document.
- Keep the document available for reference and give it to the next user.
- Contact the Bürkert sales office for any questions.

Further information concerning the product at Products.

- Enter the article number from the type label in the search bar.

The illustrations in these instructions may vary depending on the product variant.

1.1 Symbols

DANGER!

Warns of a danger that leads to death or serious injuries.

WARNING!

Warns of a danger that can lead to death or serious injuries.

CAUTION!

Warns of a danger that can lead to minor injuries.

NOTICE!

Warns of property damage on the product or the installation.

Indicates important additional information, tips and recommendations.

Refers to information in this document or in other documents.

- Indicates a step to be carried out.

✓ Indicates a result.

Menu Indicates a software user-interface text.

MAN 1000338245 EN Version: G Status: RL (released | freigegeben) printed: 22.07.2026

valvesgo.com

1.2 Terms and abbreviations

The terms and abbreviations are used in this document to refer to following definitions.

Product	Solenoid valve type 0131

1.3 Manufacturer

Bürkert Fluid Control Systems

Christian-Bürkert-Str. 13–17

74653 Ingelfingen

GERMANY

The contact addresses are available at Contact.

Need more information or additional products?

- Explore the full range of products on our eShop.

valvesgo.com

MAN 1000338245 EN Version: G Status: RL (released | freigegeben) printed: 22.07.2026

valvesgo.com

2 Safety

2.1 Intended use

Unauthorised use of the Type 0131 solenoid valve may be dangerous to people, nearby equipment and the environment.

- The device is designed for controlling, shutting off and dosing non-aggressive media; PVC variants are also suitable for aggressive media.
- With a properly connected and assembled cable plug, e.g. Bürkert Type 2518, the device complies with degree of protection IP65 in accordance with DIN EN 60529/ IEC 60529.
- When using the device, observe the authorised data, and the operating and usage conditions specified in the contract documents and in the operating instructions.
- Prerequisites for safe and trouble-free operation are correct transport, correct storage and installation as well as careful operation and maintenance.
- Only use the device as intended.
- For use in drinking water applications, observe the additional requirements relating to the connected piping systems and materials.

2.2 Basic safety instructions

These safety instructions do not take into account any incidents or events that may occur during installation, operation or maintenance.

Risk of injury from high pressure

- Before loosening lines and valves, turn off the pressure and vent the lines.

Danger due to electrical voltage

- Before working on the device or the system, switch off the power supply and secure against reactivation.
- Observe any applicable accident prevention and safety regulations for electrical devices.

Risk of burns/fire due to hot device surface if device operated continuously

- Keep the device away from highly flammable substances and media and do not touch with bare hands.

Risk of injury from malfunctioning valves with alternating current (AC)

A seized core will cause the coil to overheat, which leads to functional failure.

- Monitor the working process for proper function.

Risk of short-circuit/escape of medium due to leaking fittings.

- Make sure valve seals are properly seated.
- Screw valve and connection cables together carefully.

MAN 1000338245 EN Version: G Status: RL (released | freigegeben) printed: 22.07.2026

valvesgo.com

General hazardous situations

To prevent injuries, observe the following:

- Do not make any internal or external modifications. Secure the system/device against unintentional activation.
- Installation and maintenance tasks must always be performed by authorised technicians, using the appropriate tools.
- The process must be restarted in a defined or controlled manner after an interruption in the power supply or pneumatic supply.
- Do not subject the body/housing to mechanical stress.
- After interruption to the power supply, ensure that the process is restarted in a controlled manner.
- Comply with the generally accepted engineering standards.

MAN 1000338245 EN Version: G Status: RL (released | freigegeben) printed: 22.07.2026

valvesgo.com

valvesgo.com

3 Technical data

3.1 Operating conditions

The following values are indicated on the type label:

- Voltage (tolerance ± 10%) / current type
- Coil power (active power in W – at operating temperature)
- Pressure range
- Body material: PVC (PV) or brass (MS)
- Seal material: FKM, EPDM, NBR

Storage temperature	–10 °C...+50 °C (PVC) –30 °C...+80 °C (brass)

Circuit functions

A	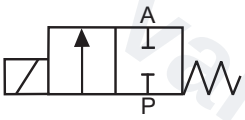	2/2-way valve, normally closed
B	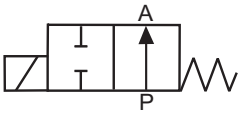	2/2-way valve, normally open
C	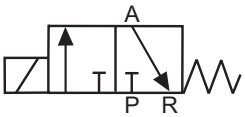	3/2-way valve, normally closed, outlet A relieved
D	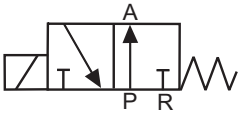	3/2-way valve, outlet A pressurised in rest position
E	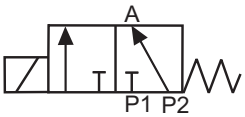	3/2-way valve; in rest position, pressure port P2 is connected to output A. P1 is closed
F	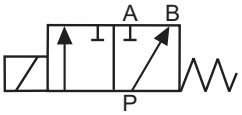	3/2-way valve, pressure port P connected to outlet B in rest position

MAN 1000338245 EN Version: G Status: RL (released | freigegeben) printed: 22.07.2026

valvesgo.com

valvesgo.com

	Kick and Drop electronics	No electronics 50 Hz, 60 Hz
Ambient temperature (see image below)	Max. + 70 °C	max. +55 °C
Operating mode (in accordance with DIN VDE 0580)	Continuous operation Intermittent operation (for determining the permissible operating parameters, see the images below)	Continuous operation Intermittent operation
Temperature protection switch	The device has a resettable temperature protection switch that switches off the device in the event of impermissible heating during intermittent operation. Only switch back on after cooling down and a new switch request.	without

Tab. 1: Electrical operating conditions

Intermittent operation for model with Kick and Drop electronics

Characteristic values (acc. to DIN VDE 0580)

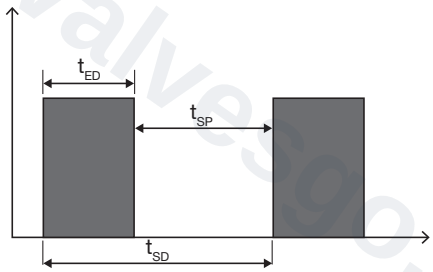

$$t_{SD}[s] = \frac{60}{SH\left[\frac{1}{min}\right]}$$

$$t_{ED}[s] = \frac{ED[\%]}{100} \times t_{SD}[s]$$

$$t_{SP}[s] = t_{SD}[s] - t_{ED}[s]$$

Fig. 1: Characteristic values for intermittent operation for model with Kick and Drop electronics

t_{SD}	Cycle time	Duty cycle	Relative duty cycle
t_{ED}	Duty cycle	SH	Switching frequency
t_{SP}	Currentless break		

MAN 1000338245 EN Version: G Status: RL (released | freigegeben) printed: 22.07.2026

valvesgo.com

Permissible operating parameters

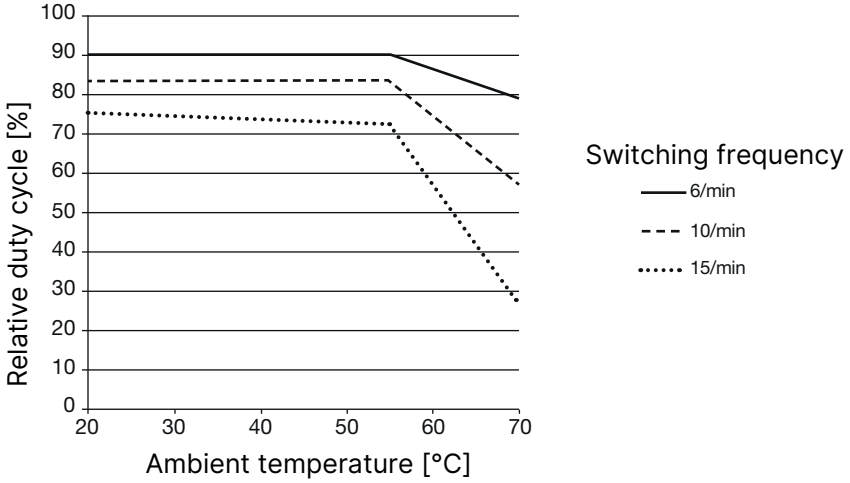

Fig. 2: Relative duty cycle dependent upon switching frequency and ambient temperature

MAN 1000338245 EN Version: G Status: RL (released | freigegeben) printed: 22.07.2026

valvesgo.com

3.2 Usage conditions

Ambient temperature	max. +50 °C
Degree of protection	IP65 in accordance with DIN EN 60529/IEC 60529 with cable plug, e.g. Bürkert Type 2518
Operating duration	Unless otherwise specified on the type label, the solenoid actuator is suitable for continuous operation
Service life	High switching frequency and high pressure will reduce overall service life

Important note for functional safety during continuous operation! During long periods of inactivity, it is recommended to operate the system at least 1-2 times per day.

High pressure surges can occur with liquids that have a high differential pressure and high flow velocity.

Permitted temperatures

Permissible medium temperature depending on body material and seal material:

Seal material	Permitted temperatures
FKM	–10...+50 °C
EPDM	–10...+50 °C

Tab. 2: PVC variant

Seal material	Variant with kick-and-drop electronics [1]	Variant without electronics 50 Hz, 60 Hz1)[1]
NBR	–10...+90 °C	–10...+90 °C
FKM	–10...+90 °C	–10...+130 °C
EPDM	–30...+90 °C	–30...+130 °C

Tab. 3: Brass variant

Viscosity: 37 mm^2/s

Permitted media

Permissible media depending on body material and seal material:

Seal material	Permitted media
FKM	Oxidising acids and substances, saline solutions
EPDM	Alkalis, alkaline washing and bleaching lyes

Tab. 4: PVC variant

[1] See information on the type label

MAN 1000338245 EN Version: G Status: RL (released | freigegeben) printed: 22.07.2026

valvesgo.com

Seal material	Permitted media
NBR	Non-aggressive liquids, technical vacuum
FKM	Peroxide solutions, hot oils without additives, diesel and heating oil without additives, washing lye, technical vacuum
EPDM	Oil- and grease-free liquids, cold and hot water, technical vacuum

Tab. 5: Brass variant

Flow velocity

Permissible flow velocities depending on the nominal diameter:

Ensure that flow velocity does not exceed the permissible value for the given differential pressure.

Nominal diameter	Flow velocity
10.0	2.0 m/s
15.0	2.5 m/s
20.0	3.0 m/s

3.3 Standards and directives

This product complies with the legal requirements applicable at the time of placing on the market and was developed and tested in accordance with the relevant European directives/regulations and harmonised standards. Conformity is documented and verified by supporting evidence where required. The EU declarations of conformity can be found on our website under the respective type country.burkert.com

Drinking Water Directive

The raw materials used for the media-contacting components correspond to the UBA-listed materials in the Drinking Water Directive KTW and W270. The raw materials with the largest surfaces in contact with media are FDA-compatible. The device was developed pursuant to DIN EN ISO 7494-2:2015.

Key conditions for drinking water approval:

Compliance with the drinking water directive for this product depends on the correct installation of the customer's system. The drinking water approval becomes valid only when the product is operated exclusively in conjunction with piping systems and materials approved for drinking water applications. Failure to comply with these requirements invalidates the drinking water approval.

➔ The mandatory installation specifications and technical requirements (including those relating to the internal surface of the pipes) are described in detail in chapterVariants approved for drinking water (only with variable code PF36+NG72) [▸ 15].

MAN 1000338245 EN Version: G Status: RL (released | freigegeben) printed: 22.07.2026

valvesgo.com

3.4 Type label

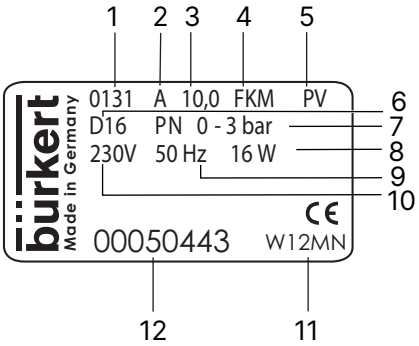

Fig. 3: Type label

1	Type	2	Circuit function
3	Orifice	4	Sealing material
5	Body material	6	Connection type
7	PN	8	Power
9	Frequency	10	Voltage
11	Manufacture code	12	Article number

MAN 1000338245 EN Version: G Status: RL (released | freigegeben) printed: 22.07.2026

valvesgo.com

4 Installation

4.1 Safety instructions

DANGER!

Risk of injury from high pressure in the system

- Before loosening lines or valves, switch off the pressure and vent the lines.

DANGER!

Risk of injury from electric shock

- Before working on the device or the system, switch off the power supply and secure against reactivation.
- Observe any applicable accident prevention and safety regulations for electrical devices.

WARNING!

Risk of injury due to improper installation

- Installation must always be performed by authorised technicians and with the appropriate tools.

WARNING!

Risk of injury due to unintentional activation of the system and uncontrolled restart.

- Secure the system against unintentional activation.
- Ensure a controlled restart after installation.

4.2 Preparatory work

Installation position: any, preferably with actuator on top.

- Clean pipelines of any contamination.
- Install a dirt trap upstream of the valve inlet (≤ 500 µm).

MAN 1000338245 EN Version: G Status: RL (released | freigegeben) printed: 22.07.2026

valvesgo.com

valvesgo.com

4.3 Variants approved for drinking water (only with variable code PF36+NG72)

The hygienic suitability of the angle-seat valve for use in drinking water applications is ensured only if all of the following system requirements are met.

Use outside these conditions invalidates the drinking water approval.

Bürkert accepts no liability for damage or impairment resulting from use in unsuitable systems.

Requirements for drinking water approval

To ensure that the drinking water approval for the valve remains valid, the following requirements must be met:

- **Use in drinking water systems:** For use in drinking water applications, the entire surrounding system that comes into contact with drinking water must be suitable and approved for drinking water.
- **Material compatibility:** The adjoining pipe systems and all other installation components used, such as seals and fittings, must be made of materials approved for contact with drinking water.
- **Specification of the internal pipe surface:** The directly connected pipes must have at least the media-contacting internal pipe surface specified in the table.

Port connection/nominal diameter (DN)	Pipe (inches)	Media-contacting pipe surface	Required pipe length (internal diameter corresponding to the nominal diameter)
GM83/DN10	3/8"	6500 mm^2	207 mm
GM84/DN15	1/2"	10,000 mm^2	213 mm
GM85/DN20	3/4"	11,000 mm^2	175 mm

MAN 1000338245 EN Version: G Status: RL (released | freigegeben) printed: 22.07.2026

valvesgo.com

valvesgo.com

4.4 Installation

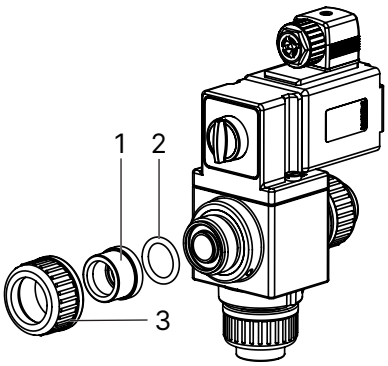

1	Insert	2	Insert the O-ring
3	Tighten the union nut evenly by hand only		

NOTICE!

Breaking hazard

- Do not use the coil as a lever arm.

- Body with welded socket: use PVDF.
- Body with PVC adhesive sleeves: Use Tangit special adhesive.

The valve body must not be installed under tension.
Seal material must not get into the device.

- Pay attention to flow direction:
  The arrow or letters on the body indicate the flow direction: from P → A (NC) or from P → B (NO).

MAN 1000338245 EN Version: G Status: RL (released | freigegeben) printed: 22.07.2026

valvesgo.com

valvesgo.com

4.5 Manual override

CAUTION!

Escaping medium due to loss of O-rings

Loss of O-rings leads to valve leakage. Medium may escape.

When manual override is locked, the valve can no longer be electrically actuated.

- To override the valve manually, press the manual override and turn it 90° clockwise until it stops.

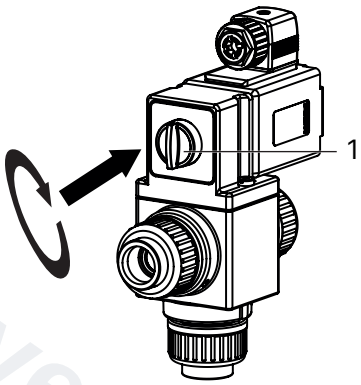

1 Manual override

4.6 Electrical connection of cable plug

WARNING!

Risk of injury from electric shock

- Before working on the device or the system, switch off the power supply and secure against reactivation.
- Observe any applicable accident prevention and safety regulations for electrical devices.

WARNING!

If there is no protective conductor function between the coil and the body, there is a risk of electric shock.

- Always connect the protective conductor and check electrical continuity.

Observe the voltage and current type according to the type label.

- Screw cable plug tight (for approved types see data sheet), ensuring a maximum torque of 1 Nm.
- Check that the valve seal is correctly seated.
- Connect the protective conductor and check electrical continuity.

MAN 1000338245 EN Version: G Status: RL (released | freigegeben) printed: 22.07.2026

valvesgo.com

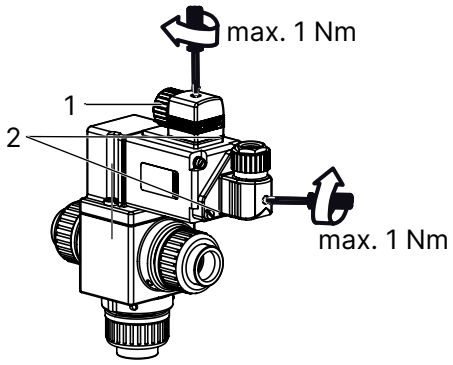

1	Approved cable plug, e.g. Type 2518 or other suitable cable plug in accordance with DIN EN 175301-803 Form A	2	Seal

MAN 1000338245 EN Version: G Status: RL (released | freigegeben) printed: 22.07.2026

valvesgo.com

valvesgo.com

5 Maintenance, troubleshooting

5.1 Safety instructions

WARNING!

Risk of injury due to improper maintenance work

- Maintenance may be carried out by authorized technicians only and with the appropriate tools.

WARNING!

Risk of injury from unintentional activation of the system and uncontrolled restart

- Secure the system against unintentional activation.
- Ensure a controlled restart after maintenance is completed.

5.2 Troubleshooting

If faults occur, check whether:

- the device is installed according to regulations,
- the electrical and fluid connections have been properly set up,
- the device is not damaged,
- all screws have been tightened,
- voltage and pressure have been applied,
- and the pipelines are clean.

Fault	Possible cause
Valve does not actuate	Short circuit or coil interrupted
	Operating pressure outside the permitted pressure range
	Manual override locked
Valve does not close	Interior of the valve soiled
	Manual override locked

MAN 1000338245 EN Version: G Status: RL (released | freigegeben) printed: 22.07.2026

valvesgo.com

6 Spare parts

6.1 Ordering spare parts

CAUTION!

Risk of injury and/or damage to property due to incorrect parts

Incorrect accessories and unsuitable spare parts may cause injuries and damage the device and the surrounding area.

- Use only original accessories and original spare parts from Bürkert.

- Order the spare parts kits, specifying the items (item 1: coil set, item 2: actuator set, item 3: wearing part set) and the order number of the device.

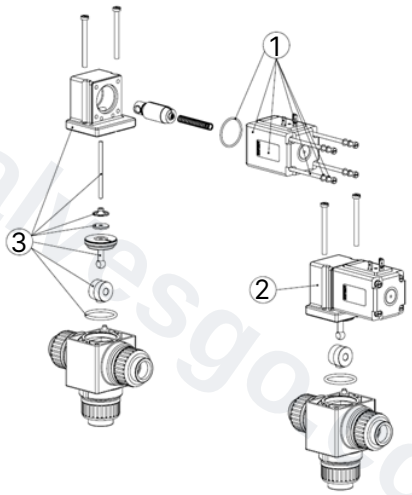

Fig. 4: Overview of spare parts sets

1	Coil set	2	Actuator set
3	Wearing part set		

MAN 1000338245 EN Version: G Status: RL (released | freigegeben) printed: 22.07.2026

valvesgo.com

7 Logistics

7.1 Transport and storage

- Protect the device against moisture and dirt in the original packaging during transportation and storage.
- Avoid UV radiation and direct sunlight.
- Protect connections, if present, from damage with protective caps.
- Observe the permitted storage temperature.

7.2 Return

No work or tests will be carried out on the device until a valid Contamination Declaration has been received.

- To return a used device to Bürkert, contact the Bürkert sales office. A return number is required.

7.3 Disposal

Environmentally friendly disposal

- Follow national regulations regarding disposal and the environment.
- Collect electrical and electronic devices separately and dispose of them as special waste.

Further information at country.burkert.com

MAN 1000338245 EN Version: G Status: RL (released | freigegeben) printed: 22.07.2026

valvesgo.com