Direct-acting 3/2-way plunger valve

- Direct-acting and compact small valve up to DN 1.6
- Slipped over coil system
- Banjo fitting for direct mounting on pneumatic valves
- Simple and fast push-in, flange or manifold mounting
- Explosion-proof variants

Product variants described in the data sheet may differ from the product presentation and description.

Type description

The 7012 valve is a direct-acting plunger valve. The stopper and the core guide tube are welded together to increase pressure resistance and leak-tightness. Various housing and seal material combinations are available depending on the actual application. A Bürkert-specific flange variant (SFB) enables the space-saving arrangement of valves on a multiple manifold. The range is supplemented by explosion-proof variants. Push-in fittings can be selected for a flexible hose connection. A banjo fitting with banjo bolt is the ideal solution for easy direct mounting on a pneumatic actuator.er Optional manual override enables quick start-up and optimal maintenance. In combination with a plug to industry standard shape B or DIN EN 17301 - 803 shape C, the valves satisfy degree of protection IP65.

DTS 1000446518 EN Version: D Status: RL (released | freigegeben | valide) printed: 07.10.2026

© Christian Bürkert GmbH & Co. KG, Subject to alteration

valvesgo.com

Table of contents

1. General technical data 4

1.1. Standard and banjo variant 4
1.2. ATEX/IECEx cable variant 5

2. Circuit functions 5

3. Approvals and conformities 6

3.1. General notes 6
3.2. Conformity 6
3.3. Standards 6
3.4. Explosion protection 6
3.5. North America (USA/Canada) 6
3.6. Foods and beverages/Hygiene 6

4. Materials 7

4.1. Bürkert resistApp 7
4.2. Material specifications 7
Standard variant 7
Banjo variant 8

5. Dimensions 9

5.1. Standard variant 9
Threaded variant 9
Flange variant 10
Flange pattern 11
5.2. Coil variants 11
Variants according to industry standard form B 11
Further electrical connections 12
5.3. Banjo variant 12
With 76 mm banjo bolt 12
With 60 mm banjo bolt 13
With enclosed push-in hose connector, rotatable 13
5.4. Single manifold 14
5.5. Multiple manifold 15
Manifolds for valves with 20 mm coil (SG2) 15
Manifolds for valves with 24.5 mm coil (SG3) 16

6. Product connections 17

6.1. Port connection 17
Pin assignment 17

7. Performance specifications 18

7.1. Power consumption 18
Standard variant, coil size 24.5 mm [0.96 in] 18
Standard variant, coil size 20 mm [0.79 in] 18

DTS 1000446518 EN Version: D Status: RL (released | freigegeben | valide) printed: 07.10.2026

valvesgo.com

valvesgo.com

8. Ordering information 19

8.1. Bürkert eShop ... 19
8.2. Bürkert product filter ... 19
8.3. Bürkert Product Enquiry Form ... 19
8.4. Ordering chart ... 20
Standard variant according to industry standard form B, coil size 24.5 mm [0.96 in], coil UL Recognized (cURus) ... 20
Standard variant according to industry standard form B, coil size 20 mm [0.79 in], coil UL Recognized (cURus) ... 22
Banjo variant, coil UL Recognized (cURus) ... 24
Additional options ... 26
8.5. Ordering chart accessories ... 26
Single manifold ... 26
Multiple manifold ... 26
Accessories for manifolds ... 26
Accessories for G ⅛ threaded connections ... 27
Cable plug Type 2516, form C according to DIN EN 175301 - 803 ... 27
Cable plug Type 2507, form B according to industry standard ... 28

DTS 1000446518 EN Version: D Status: RL (released | freigegeben | valide) printed: 07.10.2026

valvesgo.com

valvesgo.com

1. General technical data

1.1. Standard and banjo variant

Product properties	
Dimensions	Further information can be found in chapter "5. Dimensions" on page 9.
Material	
Seal	FKM, EPDM
Body	Brass, polyamide (PA), polyphenylene sulphide (PPS), stainless steel 1.4305/303
Manual override	Optional, standard for Type 7012 banjo variant
Weight	
Standard variant 24.5 mm solenoid coil	5 ¼ oz (with NPT ⅛)
Standard variant 20 mm solenoid coil	4 ¼ oz (with NPT ⅛)
Banjo variant	4 ¾ oz
Orifice	DN 1.2...DN 2.0
Circuit function	C and D Further information can be found in chapter "2. Circuit functions" on page 5.
Thermal insulation class of solenoid coil	Epoxy coil class H
Performance data	
Duty cycle	
Single valve	100 % resp. 50 % continuous operation
For block mounting on multiple manifold	With 4 W/5 W solenoid coil 100 % ED (at max. + 131 °F)
Switching time [1.)]	
Standard variant	Orifice 1.2...1.6 mm: opening 8...12 ms, closing 8...12 ms
Banjo variant	Orifice 1.2 mm: opening 7...12 ms, closing 7...12 ms
Electrical data	
Operating voltage	24 V DC, 24 V 50 Hz, 24 V 60 Hz, 110 V 50 Hz, 120 V 60 Hz, 230 V 50 Hz, 240 V 60 Hz
Power consumption	Further information can be found in chapter "7. Performance specifications" on page 18.
Voltage tolerance	± 10 %
Medium data	
Operating medium	Neutral gases and liquids (e.g. compressed air, water, hydraulic oil, technical vacuum)
Medium temperature	
Standard variant	+ 14 °F...+ 212 °F
Banjo variant	+ 14 °F...+ 140 °F
Viscosity	Max. 21 cSt
Product connections	
Electrical connection	• Plug contacts according to DIN EN 175301 - 80 form C for cable plug **Type 2516** ▸. Further information can be found in chapter "Cable plug Type 2516, form C according to DIN EN 175301 - 803" on page 27. • Plug contacts according to industry standard form B for cable plug **Type 2507** ▸. Further information can be found in chapter "Cable plug Type 2507, form B according to industry standard" on page 28. • Flat pin terminal as protection class III device • Flying leads connection on request for coil size 20 mm
Port connection	
Standard variant	M5, G ⅛, NPT ⅛, Flange
Banjo variant	G ⅛, G ¼, NPT ⅛, NPT ¼ and hose connector Ø 6 mm
Approvals and conformities	
Degree of protection	IP65 with cable plug
North America (USA/Canada)	Further information can be found in chapter "3.5. North America (USA/Canada)" on page 6.
Foods and beverages/Hygiene	Further information can be found in chapter "3.6. Foods and beverages/Hygiene" on page 6.
Environment and installation	
Installation position	As required, preferably with actuator upright
Ambient temperature	
Standard variant	Max. + 131 °F resp. + 167 °F (depending on power level)
Banjo variant	+ 14 °F...+ 131 °F resp. + 167 °F (depending on power level)

1.) Measurement at + 68 °F, 87 psi at the valve outlet acc. to DIN ISO 12238:2001, opening: pressure build-up 0...10 %, closing: pressure reduction 100...90 %

DTS 1000446518 EN Version: D Status: RL (released | freigegeben | valide) printed: 07.10.2026

valvesgo.com

1.2. ATEX/IECEx cable variant

Product properties	
Material	
Seal	FKM, EPDM
Body	Brass, stainless steel 1.4305/303
Circuit function	A and B Further information can be found in chapter "2. Circuit functions" on page 5.
Available coil size	SG3 (24.5 mm width)
Performance data	
Operating pressure	Up to 34 bar (depending on orifice and coil power)
Medium data	
Operating medium	Neutral gases and liquids (e.g. compressed air, water, hydraulic oil, technical vacuum)
Medium temperature [1.)]	
FKM	- 10 °C...+ 100 °C
EPDM	- 30 °C...+ 100 °C
Product connections	
Electrical connection	ATEX/IECEx cable variant with 3 m moulded-in cable
Port connection	
Thread	G ⅛, NPT ⅛, RC⅛, M5, UNF 10 - 32
Flange	Flange "FK01"
Approvals and conformities	
Degree of protection	IP65 with cable plug and ATEX/IECEx cable variant
Explosion protection	Further information can be found in chapter "3.4. Explosion protection" on page 6.
Environment and installation	
Ambient temperature [1.)]	
FKM	- 10 °C...+ 55 °C (max. + 60 °C on request)
EPDM	- 30 °C...+ 55 °C (max. + 60 °C on request)

1.) The minimum temperature depends on the seal material.

2. Circuit functions

Symbol	Description
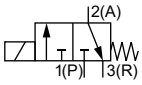	**Circuit function C (CF C)** 3/2-way solenoid valve Direct-acting Normally closed
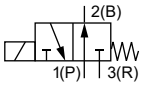	**Circuit function D (CF D)** 3/2-way solenoid valve Direct-acting Normally open

DTS 1000446518 EN Version: D Status: RL (released | freigegeben | valide) printed: 07.10.2026

valvesgo.com

valvesgo.com

3. Approvals and conformities

3.1. General notes

- The approvals and conformities listed below must be stated when making enquiries. This is the only way to ensure that the product complies with all required specifications.
- Not all available variants can be supplied with the below mentioned approvals or conformities.

3.2. Conformity

In accordance with the Declaration of Conformity, the product is compliant with the EU Directives.

3.3. Standards

The applied standards which are used to demonstrate compliance with the EU Directives are listed in the EU-Type Examination Certificate and/or the EU Declaration of Conformity.

3.4. Explosion protection

Approval	Description
	Optional: Explosion protection (valid for coils with fixed cable outlet) **ATEX:** EPS 21 ATEX 1 128 X II 2G Ex mb IIC T4 Gb II 2D Ex mb IIIC T130 °C Db **IECEx:** IECEx EPS 21.0045X Ex mb IIC T4 Gb Ex mb IIIC T130 °C Db The fixed cable is halogen-free according to IEC 60754 - 1

3.5. North America (USA/Canada)

Approval	Description
	Valid for coils: UL Recognized for the USA and Canada The coils are UL Recognized for the USA and Canada according to: • UL 429 (electrically operated valves) • CAN/CSA-C22.2 No. 139

3.6. Foods and beverages/Hygiene

Conformity	Description
FDA	**FDA – Code of Federal Regulations (valid for the variable code PL02, PL03)** All wetted materials are compliant with the Code of Federal Regulations published by the FDA (Food and Drug Administration, USA) according to the manufacturer's declaration.
USP	**United States Pharmacopeial Convention (USP) (valid for the variable code PL04)** All wetted materials are biocompatible according to the manufacturer's declaration.
	EC Regulation 1935/2004 of the European Parliament and of the Council (valid for the variable code PL01, PL02) All wetted materials are compliant with EC Regulation 1935/2004/EC according to the manufacturer's declaration.

DTS 1000446518 EN Version: D Status: RL (released | freigegeben | valide) printed: 07.10.2026

valvesgo.com

4. Materials

4.1. Bürkert resistApp

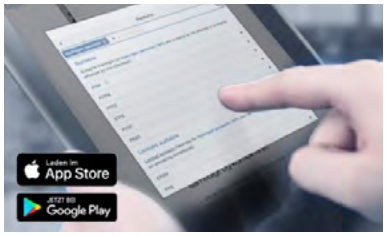

Bürkert resistApp – Chemical resistance chart

You want to ensure the reliability and durability of the materials in your individual application case? Verify your combination of media and materials on our website or in our resistApp.

Start chemical resistance check

4.2. Material specifications

Standard variant

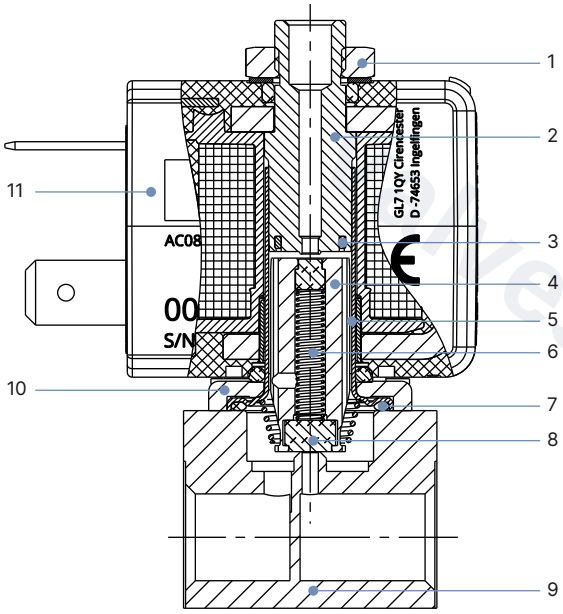

No.	Element	Material
1	Nut	DIN 176 Surface finish thick film passivated KOSA0101
2	Stopper	Stainless steel 1.4113/434
3	Shading ring	Copper (silver optional)
4	Core	Stainless steel 1.4113/434
5	Core guide tube	Stainless steel 1.4303/305L
6	Spring	Stainless steel 1.4310/301
7	O-ring	FKM/EPDM
8	Seal	FKM/EPDM
9	Valve body	Brass, stainless steel 1.4305/303 PA (polyamide)
10	Flange	• Surface finish thick film passivated KOSA0101 (brass variant) • Nickel-plated surface (stainless steel variant)
11	Coil	Epoxy

DTS 1000446518 EN Version: D Status: RL (released | freigegeben | valide) printed: 07.10.2026

valvesgo.com

Banjo variant

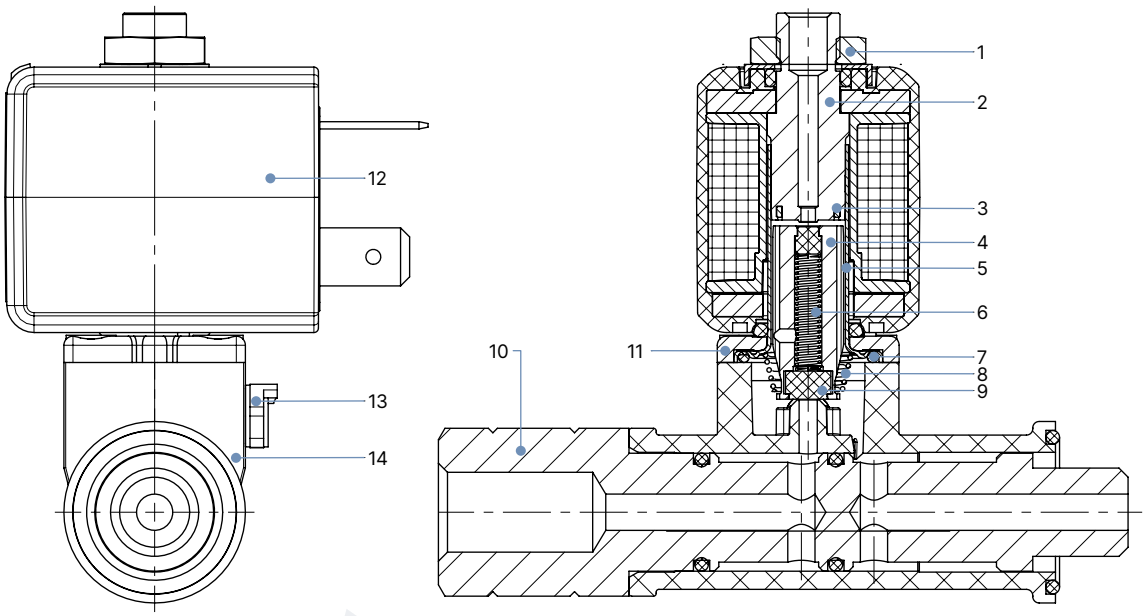

No.	Element	Material
1	Nut	DIN 176 Surface finish thick film passivated KOSA0101
2	Stopper	Stainless steel 1.4113
3	Shading ring	Copper (silver optional)
4	Core	Stainless steel 1.4113
5	Core guide tube	Stainless steel 1.4303 ST
6	Spring	Stainless steel 1.4310
7	O-ring	FKM
8	Spring	Stainless steel 1.4310
9	Seal	FKM
10	Banjo bolt	Nickel-plated brass
11	Flange	• Surface finish thick film passivated KOSA0101 (brass variant) • Nickel-plated surface (stainless steel variant)
12	Coil	Epoxy
13	Manual override	Durethan
14	Body	PPS (polyphenylene sulphide)

DTS 1000446518 EN Version: D Status: RL (released | freigegeben | valide) printed: 07.10.2026

valvesgo.com

valvesgo.com

5. Dimensions

5.1. Standard variant

Threaded variant

Note:

- Dimensions in mm [inch]
- Variants according to industry standard form B

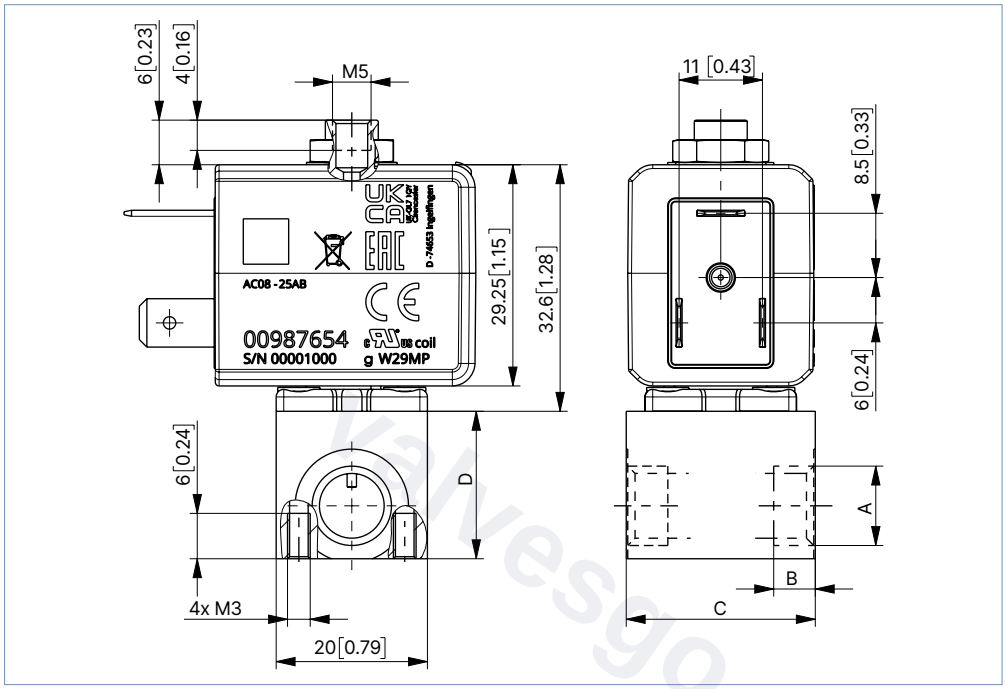

Port connection	A	B		C		D	
		[mm]	[in]	[mm]	[in]	[mm]	[in]
Thread	M5	5	0.19	20	0.78	14	0.55
	G ⅛	8	0.31	25	0.98	19.5	0.74
	NPT ⅛	7	0.31	25	0.98	19.5	0.74

DTS 1000446518 EN Version: D Status: RL (released | freigegeben | valide) printed: 07.10.2026

valvesgo.com

Flange variant

Note:

- Dimensions in mm [inch]
- Variants according to industry standard form B

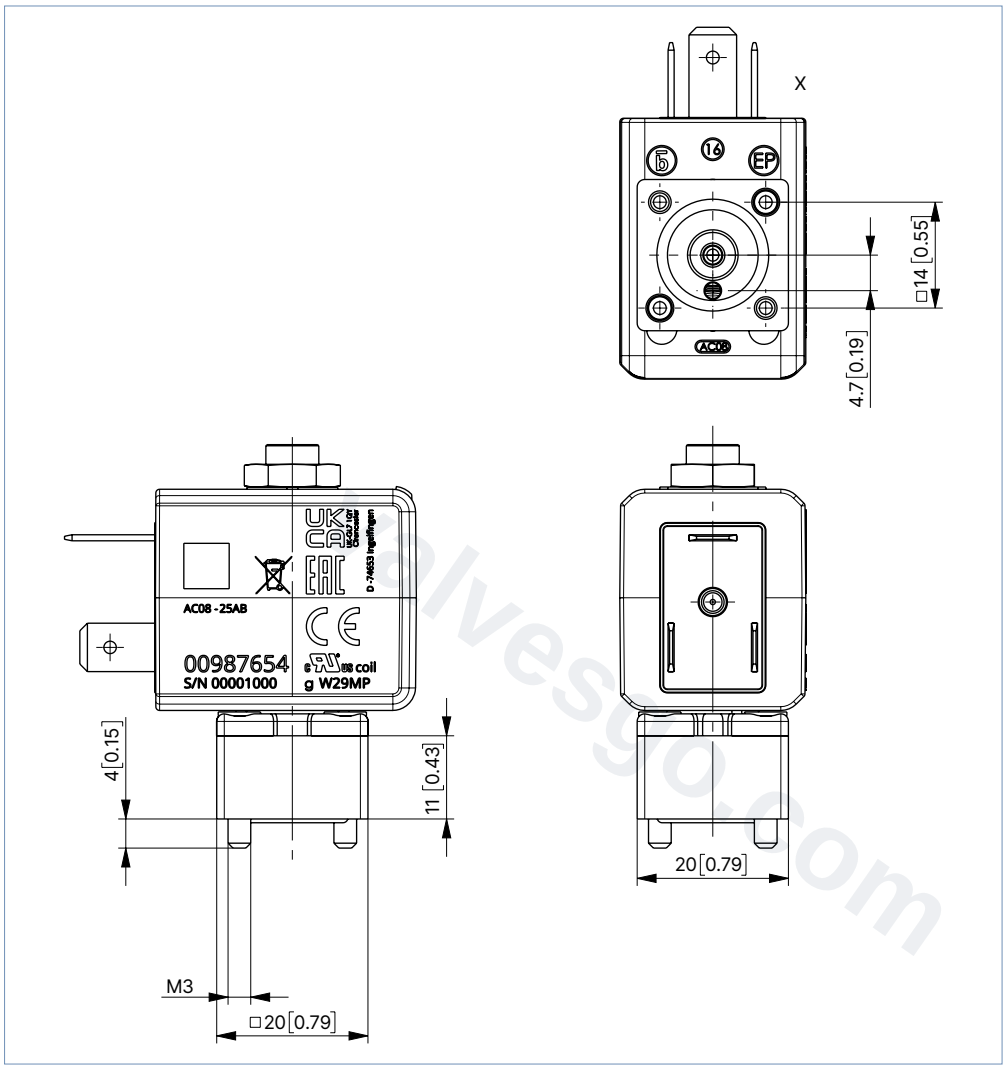

DTS 1000446518 EN Version: D Status: RL (released | freigegeben | valide) printed: 07.10.2026

valvesgo.com

DTS 1000446518 EN Version: D Status: RL (released | freigegeben | valide) printed: 07.10.2026

Flange pattern

Note:

- Dimensions in mm [inch]
- On the connection side, the geometries are to be realised as shown in the following drawing.
- Flange variant (FK01) according to FST 1000225877

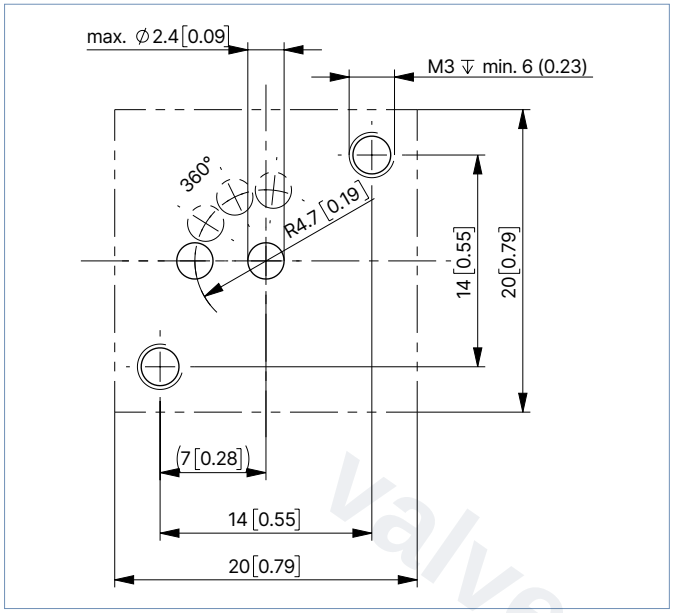

5.2. Coil variants

Variants according to industry standard form B

Note:
Dimensions in mm [inch]

Coil size 2 (20 mm [0.79 in])	Coil size 3 (24.5 mm [0.96 in])
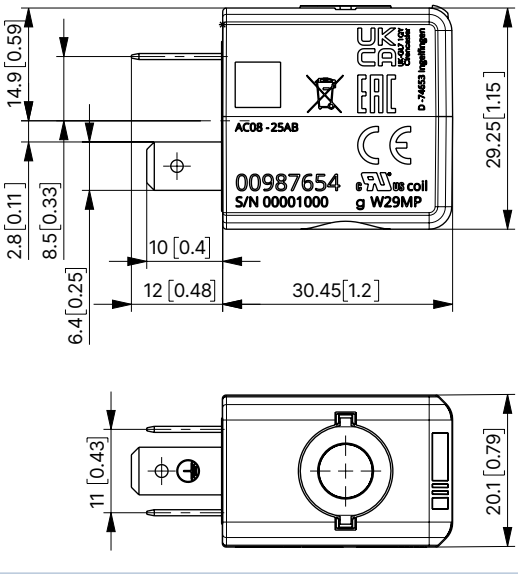	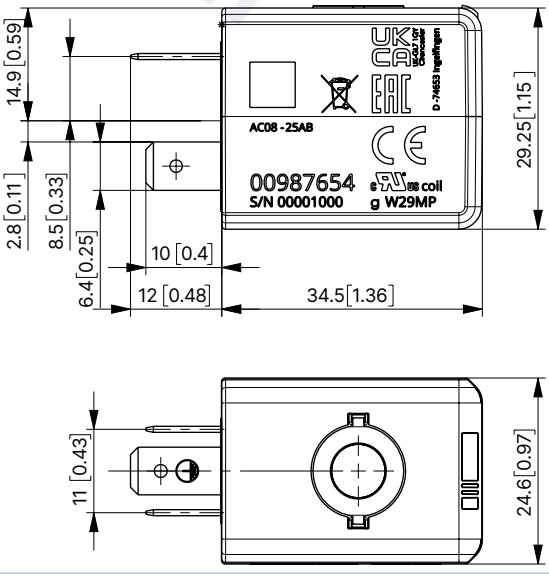

valvesgo.com

Further electrical connections

Note:

- Dimensions in mm [inch]
- Specifications apply to coil sizes 20 mm [0.79 in] and 24.5 mm [0.96 in]

Variant flat pin terminal as protection class III device	Variant according to DIN EN 175301 - 803 form C
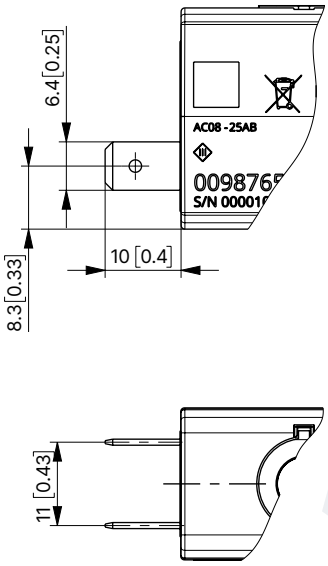	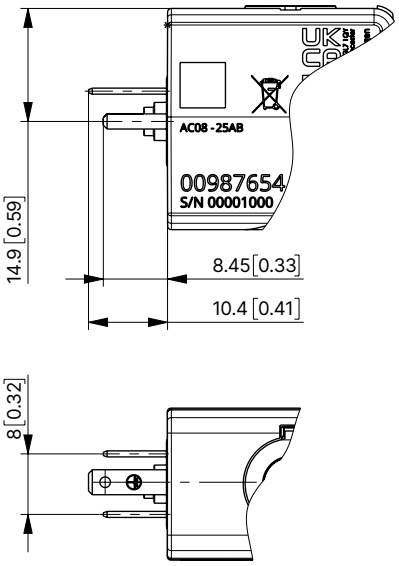

5.3. Banjo variant

With 76 mm banjo bolt

Note:

- Dimensions in mm [inch]
- Coil size 24.5 mm [0.96 in]
- Available orifices: 1.2 mm, 1.6 mm and 2.0 mm

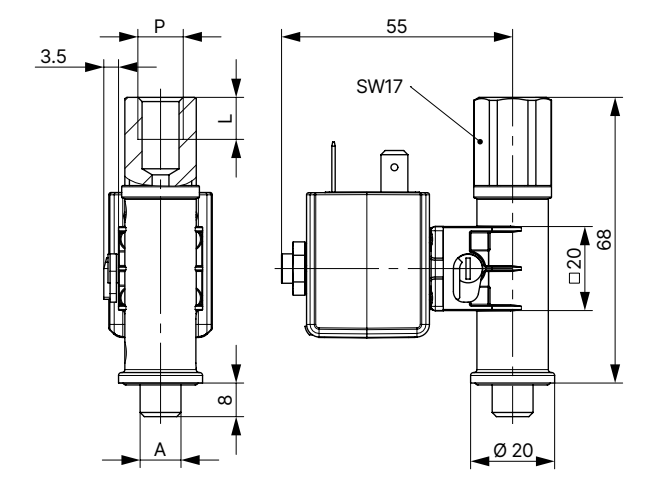

Port connection	P	A	L	
	[inch]	[inch]	[mm]	[inch]
BJ02	G ¼	G ¼	12	0.47
BJ03	NPT ¼	G ⅛	12.9	0.51
BJ04	NPT ¼	G ¼	12.9	0.51
BJ05	G ¼	G ⅛	12	0.47
BJ07	NPT ⅛	G ⅛	8.9	0.35

DTS 1000446518 EN Version: D Status: RL (released | freigegeben | valide) printed: 07.10.2026

valvesgo.com

With 60 mm banjo bolt

Note:

- Dimensions in mm [inch]
- Coil size 24.5 mm [0.96 in]
- Available orifices: 1.2 mm, 1.6 mm and 2.0 mm

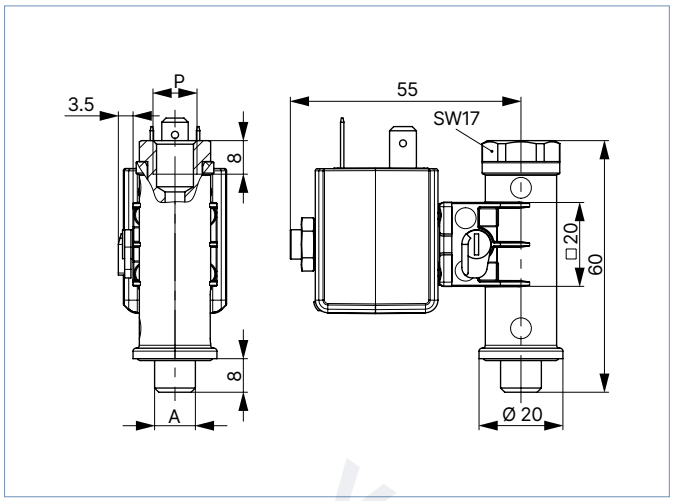

Port connection	P	A	L	
	[inch]	[inch]	[mm]	[inch]
BJ01	G ⅛	G ⅛	8	0.31
BJ06	G ⅛	G ¼	8	0.31

With enclosed push-in hose connector, rotatable

Note:

- Dimensions in mm
- Only available for banjo variants with 60 mm banjo bolt and port connection BJ01 and BJ06
- Minimum order quantity 50 pieces

Elbow screw fitting, rotatable with O-ring, made of nickel-plated brass, supplied loose (variable code: LB26)	Elbow screw fitting, rotatable with O-ring, made of POM, supplied loose (variable code: LB27)
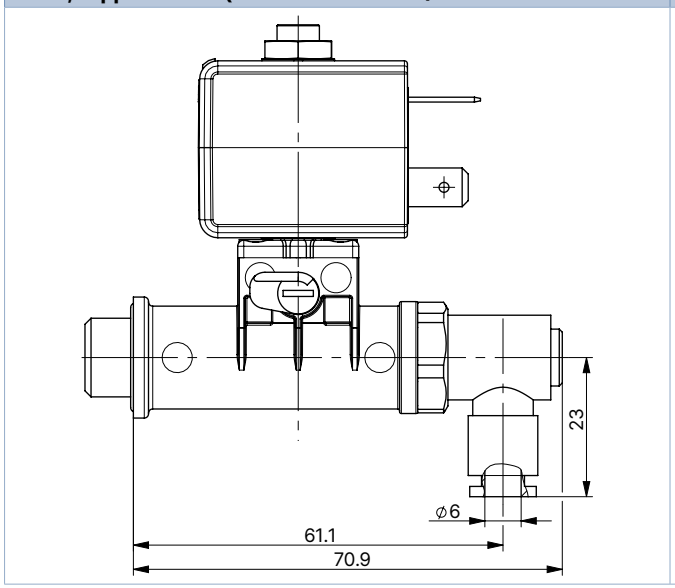	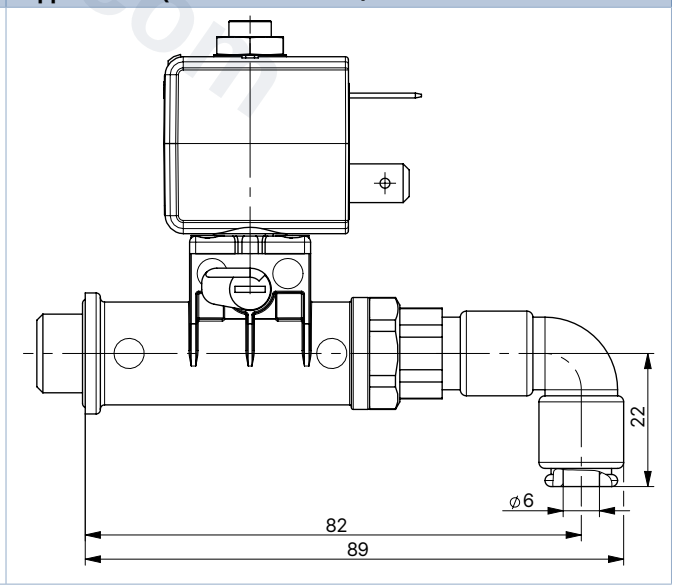

DTS 1000446518 EN Version: D Status: RL (released | freigegeben | valide) printed: 07.10.2026

valvesgo.com

5.4. Single manifold

Note:

- Dimensions in mm [inch]
- Can only be combined with valves with coil size 20 mm [0.79 in]

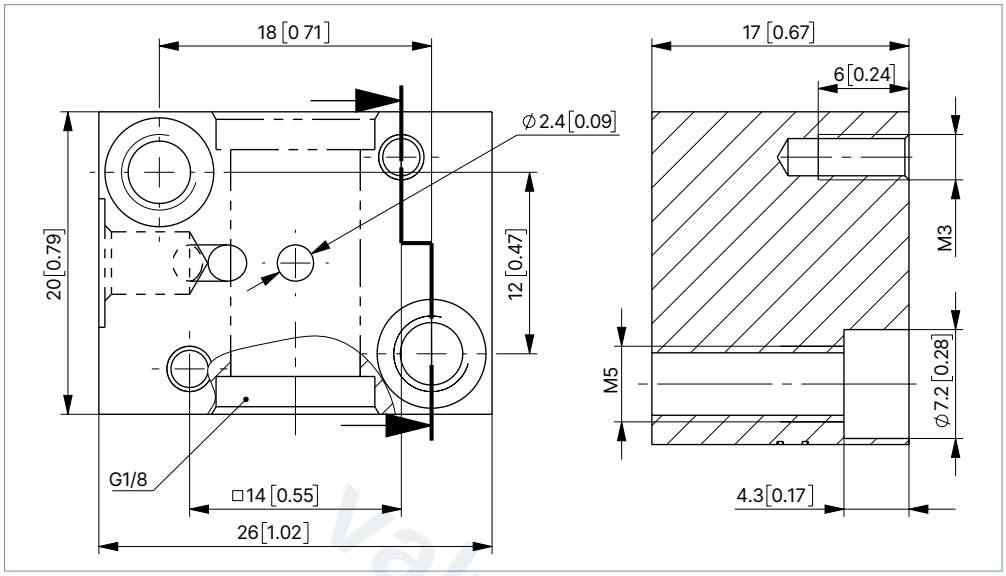

Quantity of valve slots	A		B		C		Article no.
	[mm]	[in]	[mm]	[in]	[mm]	[in]	
1	20	0.78	12	0.47	–	–	005312

DTS 1000446518 EN Version: D Status: RL (released | freigegeben | valide) printed: 07.10.2026

valvesgo.com

valvesgo.com

5.5. Multiple manifold

Manifolds for valves with 20 mm coil (SG2)

Note:

- Dimensions in mm [inch]
- Can only be combined with Type 7012 valves with coil size 20 mm [0.79 in]

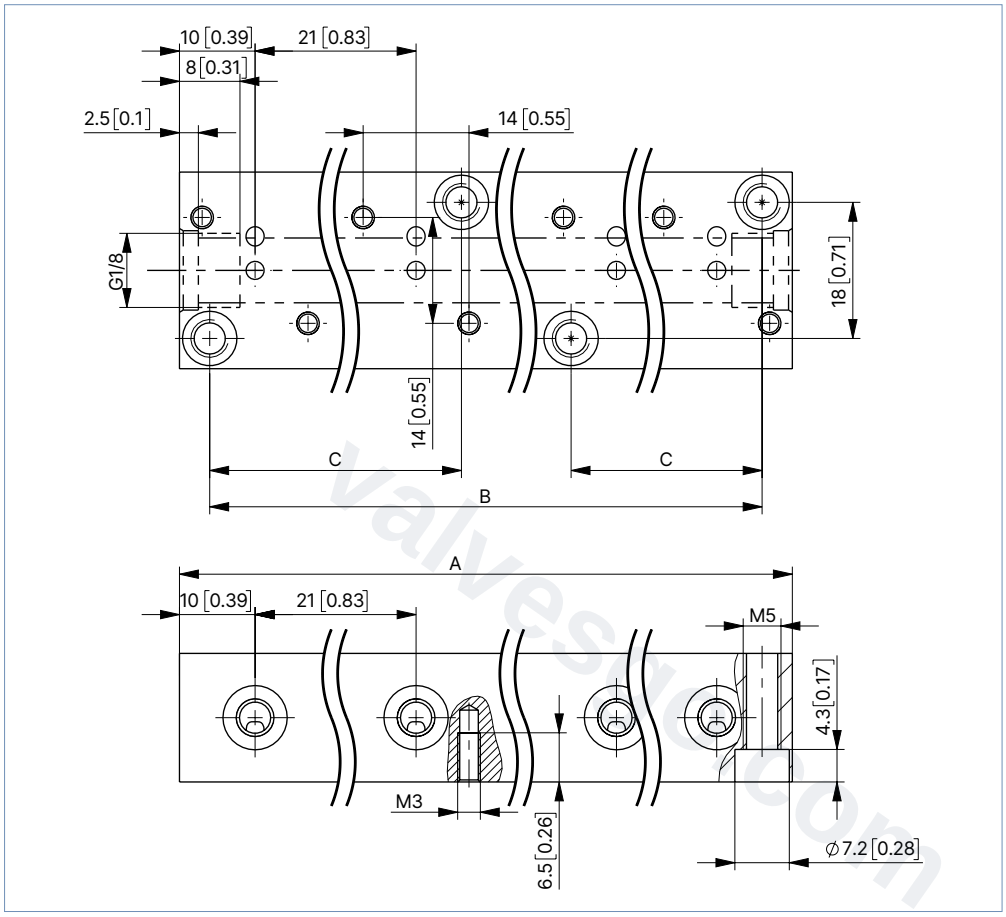

Quantity of valve slots	A		B		C		Article no.
	[mm]	[in]	[mm]	[in]	[mm]	[in]	
2	41	1.61	33	1.29	–	–	005355
3	62	2.44	54	2.12	–	–	005313
4	83	3.26	75	2.95	–	–	005314
5	104	4.09	96	3.77	–	–	005315
6	125	4.92	117	4.6	–	–	005316
7	146	5.74	138	5.43	–	–	005893
8	167	6.57	159	6.25	54	2.12	005166
9	188	7.4	180	7.08	54	2.12	005241
10	209	8.22	201	7.91	75	2.95	005819
11	230	9.05	222	8.74	75	2.95	005242
12	251	9.88	243	9.56	96	3.77	005222

DTS 1000446518 EN Version: D Status: RL (released | freigegeben | valide) printed: 07.10.2026

valvesgo.com

Manifolds for valves with 24.5 mm coil (SG3)

Note:

- Dimensions in mm
- Can be combined with Type 7012 valves with coil size 24.5 mm [0.965 in] or with valves with function B

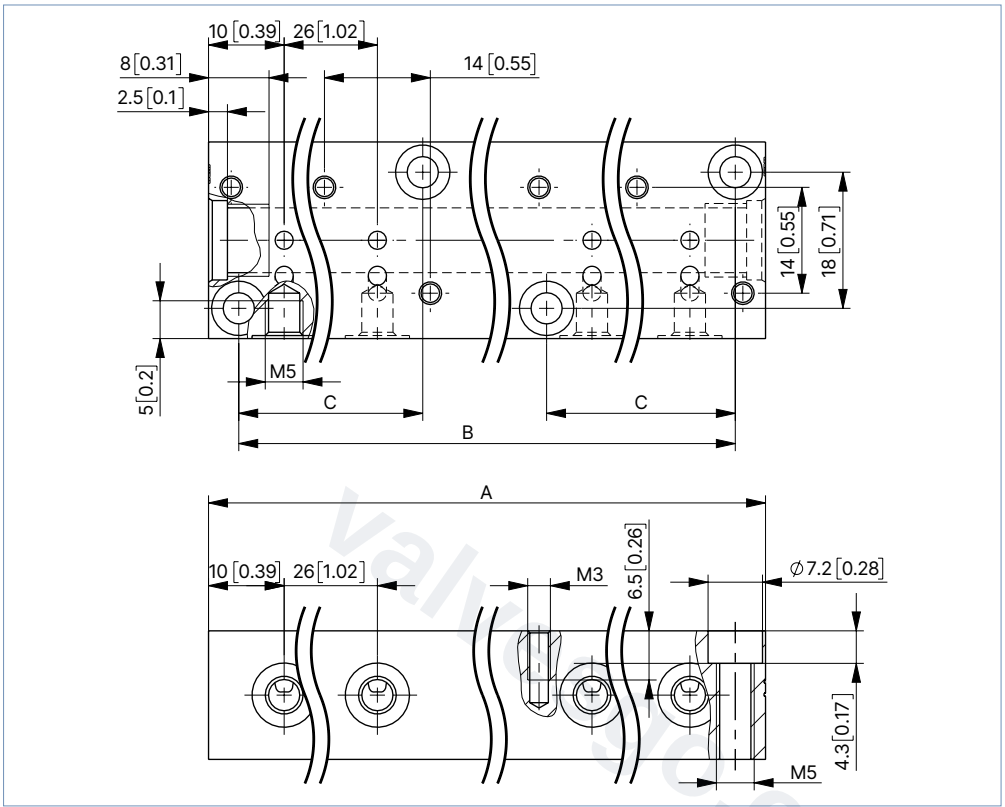

Quantity of valve slots	A		B		C		Article no.
	[mm]	[in]	[mm]	[in]	[mm]	[in]	
2	46	1.81	38	1.49	–	–	60021427
3	72	2.83	64	2.51	–	–	60021342
4	98	3.85	90	3.54	–	–	60021429
5	124	4.88	116	4.56	–	–	60021428
6	150	5.9	142	5.59	–	–	60021442
7	176	6.92	168	6.61	–	–	20060327
8	202	7.95	194	7.63	64	2.51	20060338
9	228	8.97	220	8.66	64	2.51	20060341
10	254	10	246	9.67	90	3.54	20015744
11	280	11.02	272	10.7	90	3.54	20060374
12	306	12.04	298	11.73	116	4.56	20060376

DTS 1000446518 EN Version: D Status: RL (released | freigegeben | valide) printed: 07.10.2026

valvesgo.com

6. Product connections

6.1. Port connection

Pin assignment

For the positions marked with *, ** or *** in the drawing, the connections are marked with the letters shown in the table above, depending on the circuit function. Unused connections in circuit functions A or B will be closed off with a blanking plug or cap nut.

Circuit function	Connection Type			Threaded variant	Flange variant
	*	**	***		
A	P	to lock	A	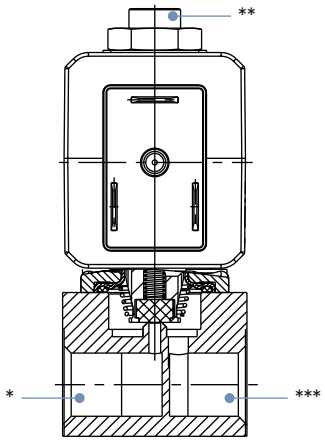	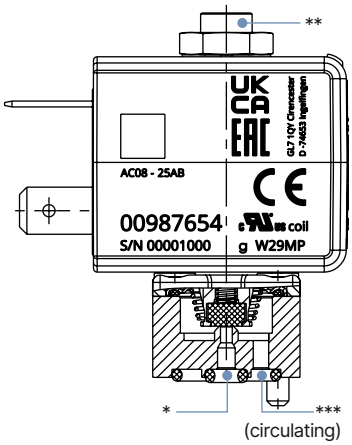
B	to lock	B	P		
C	P	R	A		
D	R	P	B		
T	P	R	A		

DTS 1000446518 EN Version: D Status: RL (released | freigegeben | valide) printed: 07.10.2026

valvesgo.com

valvesgo.com

7. Performance specifications

7.1. Power consumption

Standard variant, coil size 24.5 mm [0.96 in]

Coil	Orifice	Electrical power					Switching times 1.)	
		Inrush AC	Hold AC		DC		Opening	Closing
	[mm]	[VA]	[VA]	[W]	Cold [W]	Warm [W]	[ms]	[ms]
24 V / DC / 7 W	1.2	–	–	–	7	5.5	8...12	8...12
	1.6							
	2.0							
24 V / DC / 5.5 W	1.2	–	–	–	5.5	4.5		
	1.6							
	2.0							
24 V / 50 Hz / 4 W	1.2	12	6.5	4	–	–		
	1.6							
	2.0							
230 V / 50 Hz / 4 W	1.2	12	6.5	4	–	–		
	1.6							
	2.0							

1.) Measurement at + 68 °F, 87 psi 2.) at the valve outlet acc. to DIN ISO 12238:2001, opening: pressure build-up 0...10 %, closing: pressure reduction 100...90 %
2.) Pressure data: overpressure to atmospheric pressure and air as a medium

Standard variant, coil size 20 mm [0.79 in]

Coil	Orifice	Electrical power					Switching times 1.)	
		Inrush AC	Hold AC		DC		Opening	Closing
	[mm]	[VA]	[VA]	[W]	Cold [W]	Warm [W]	[ms]	[ms]
24 V / DC / 6.5 W	1.2	–	–	–	6.5	5	8...12	8...12
	1.6							
	2.0							
24 V / 50 Hz / 6 W	1.2	11	7	6	–	–		
	1.6							
	2.0							
230 V / 50 Hz / 6 W	1.2	11	7	6	–	–		
	1.6							
	2.0							
24 V / DC / 5 W	1.2	–	–	–	5	4		
	1.6							
	2.0							
24 V / 50 Hz / 4 W	1.2	9	5	4	–	–		
	1.6							
	2.0							
230 V / 50 Hz / 4 W	1.2	9	5	4	–	–		
	1.6							
	2.0							

1.) Measurement at + 68 °F, 87 psi 2.) at the valve outlet acc. to DIN ISO 12238:2001, opening: pressure build-up 0...10 %, closing: pressure reduction 100...90 %
2.) Pressure data: overpressure to atmospheric pressure and air as a medium

DTS 1000446518 EN Version: D Status: RL (released | freigegeben | valide) printed: 07.10.2026

valvesgo.com

valvesgo.com

8. Ordering information

8.1. Bürkert eShop

Bürkert eShop – Easy ordering and quick delivery

You want to find your desired Bürkert product or spare part quickly and order directly? Our online shop is available for you 24/7. Sign up and enjoy all the benefits.

Order online now

8.2. Bürkert product filter

Bürkert product filter – Get quickly to the right product

You want to select products comfortably based on your technical requirements?
Use the Bürkert product filter and find suitable articles for your application quickly and easily.

Try out our product filter

8.3. Bürkert Product Enquiry Form

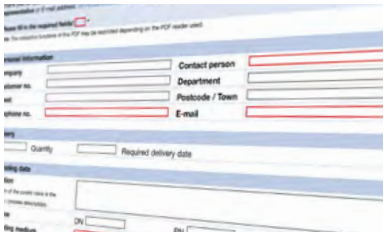

Bürkert Product Enquiry Form – Your enquiry quickly and compactly

Would you like to make a specific product enquiry based on your technical requirements? Use our Product Enquiry Form for this purpose. There you will find all the relevant information for your Bürkert contact. This will enable us to provide you with the best possible advice.

Fill out the form now

DTS 1000446518 EN Version: D Status: RL (released | freigegeben | valide) printed: 07.10.2026

valvesgo.com

8.4. Ordering chart

Standard variant according to industry standard form B, coil size 24.5 mm [0.96 in], coil UL Recognized (cURus)

Note:
All valves are delivered without a cable plug.

Circuit function	Port connection	Orifice	C_v value water [1.]	Voltage/ Frequency/ Power	Maximum duty cycle	Pressure range [2.] (MAWP [3.])		Article no.	
						Ambient temperature +167 °F	Ambient temperature +131 °F	Brass body	Stainless steel body
						Air + water	Air + water	FKM seal	
		[mm]	[gal/min]	[V/Hz/W]		[psi]	[psi]		
CF C 3/2-way solenoid valve Direct-acting Normally closed 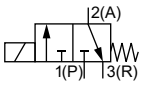	NPT ⅛	1.2	0.05	24 / DC / 7	100 % ED	–	0...189	o. r.	o. r.
				24 / DC / 5.5		0...167	0...167	o. r.	o. r.
				24 / 60 / 4		0...189	0...189	o. r.	o. r.
				120 / 60 / 4		0...189	0...189	o. r.	o. r.
				240 / 60 / 4		0...189	0...189	o. r.	o. r.
		1.6	0.07	24 / DC / 7	100 % ED	–	0...109	o. r.	o. r.
				24 / DC / 5.5		0...87	0...87	o. r.	o. r.
				24 / 60 / 4		0...109	0...109	o. r.	o. r.
				120 / 60 / 4		0...109	0...109	o. r.	o. r.
				240 / 60 / 4		0...109	0...109	o. r.	o. r.
		2.0 [4.]	0.13	24 / DC / 7	100 % ED	–	0...102	o. r.	o. r.
				24 / DC / 5.5		0...73	0...73	o. r.	o. r.
				24 / 60 / 4		0...87	0...87	o. r.	o. r.
				120 / 60 / 4		0...87	0...87	o. r.	o. r.
				240 / 60 / 4		0...87	0...87	o. r.	o. r.
	Manifold (FK01)	1.2	0.05	24 / DC / 7	100 % ED	–	0...189	379906	380132
				24 / DC / 5.5		0...167	0...167	390269	390271
				24 / 60 / 4		0...189	0...189	o. r.	o. r.
				120 / 60 / 4		0...189	0...189	o. r.	o. r.
				240 / 60 / 4		0...189	0...189	o. r.	o. r.
		1.6	0.07	24 / DC / 7	100 % ED	–	0...109	379915	380137
				24 / DC / 5.5		0...87	0...87	390275	390273
				24 / 60 / 4		0...109	0...109	o. r.	o. r.
				120 / 60 / 4		0...109	0...109	o. r.	o. r.
				240 / 60 / 4		0...109	0...109	o. r.	o. r.
		2.0 [4.]	0.13	24 / DC / 7	100 % ED	–	0...102	o. r.	o. r.
				24 / DC / 5.5		0...73	0...73	o. r.	o. r.
				24 / 60 / 4		0...87	0...87	o. r.	o. r.
				120 / 60 / 4		0...87	0...87	o. r.	o. r.
				240 / 60 / 4		0...87	0...87	o. r.	o. r.
CF D 3/2-way solenoid valve Direct-acting Normally open 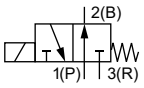	NPT ⅛	1.2	0.05	24 / DC / 5.5	100 % ED	0...145	0...145	o. r.	o. r.
				24 / 60 / 4		0...145	0...145	o. r.	o. r.
				120 / 60 / 4		0...145	0...145	o. r.	o. r.
				240 / 60 / 4		0...145	0...145	o. r.	o. r.
		1.6	0.07	24 / DC / 5.5	100 % ED	0...87	0...87	o. r.	o. r.
				24 / 60 / 4		0...87	0...87	o. r.	o. r.
				120 / 60 / 4		0...87	0...87	o. r.	o. r.
				240 / 60 / 4		0...87	0...87	o. r.	o. r.
		2.0 [4.]	0.13	24 / DC / 5.5	100 % ED	0...116	0...116	o. r.	o. r.
				24 / 60 / 4		0...102	0...102	o. r. [5.]	o. r. [5.]
				120 / 60 / 4		0...102	0...102	o. r. [5.]	o. r. [5.]
				240 / 60 / 4		0...102	0...102	o. r. [5.]	o. r. [5.]

DTS 1000446518 EN Version: D Status: RL (released | freigegeben | valide) printed: 07.10.2026

valvesgo.com

Circuit function	Port connection	Orifice	C_v value water [1.]	Voltage/ Frequency/ Power	Maximum duty cycle	Pressure range [2.] (MAWP [3.])		Article no.	
						Ambient temperature + 167 °F	Ambient temperature + 131 °F	Brass body	Stainless steel body
						Air + water	Air + water	FKM seal	
		[mm]	[gal/min]	[V/Hz/W]		[psi]	[psi]		
CF D 3/2-way solenoid valve Direct-acting Normally open 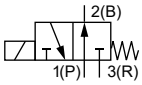	Manifold (FK01)	1.2	0.05	24 / DC / 5.5	100 % ED	0...145	0...145	390450	390452
				24 / 60 / 4		0...145	0...145	o. r.	o. r.
				120 / 60 / 4		0...145	0...145	o. r.	o. r.
				240 / 60 / 4		0...145	0...145	o. r.	o. r.
		1.6	0.07	24 / DC / 5.5	100 % ED	0...87	0...87	390462	390464
				24 / 60 / 4		0...87	0...87	o. r.	o. r.
				120 / 60 / 4		0...87	0...87	o. r.	o. r.
				240 / 60 / 4		0...87	0...87	o. r.	o. r.
		2.0 [4.]	0.13	24 / DC / 5.5	100 % ED	0...116	0...116	o. r.	o. r.
				24 / 60 / 4		0...102	0...102	o. r. [5.]	o. r. [5.]
				120 / 60 / 4		0...102	0...102	o. r. [5.]	o. r. [5.]
				240 / 60 / 4		0...102	0...102	o. r. [5.]	o. r. [5.]

o. r. = on request
1.) Measurement at + 68 °F, 14.5 [2.] bar at the valve inlet and free outlet
2.) Pressure data: overpressure to atmospheric pressure and air as a medium
3.) Maximum allowable working pressure
4.) Limited swelling compensation
5.) Can also be feasible with coil size 2

DTS 1000446518 EN Version: D Status: RL (released | freigegeben | valide) printed: 07.10.2026

valvesgo.com

valvesgo.com

Standard variant according to industry standard form B, coil size 20 mm [0.79 in], coil UL Recognized (cURus)

Note:
All valves are delivered without a cable plug.

Circuit function	Port connection	Orifice	C_v value water [1.]	Voltage/ Frequency/ Power	Maximum duty cycle	Pressure range [2.] (MAWP [3.])		Article no.	
						Ambient temperature +167 °F	Ambient temperature +131 °F	Brass body	Stainless steel body
						Air + water	Air + water	FKM seal	
		[mm]	[gal/min]	[V/Hz/W]		[psi]	[psi]		
CF C 3/2-way solenoid valve Direct-acting Normally closed 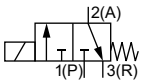	NPT ⅛	1.2	0.05	24 / DC / 6.5	100 % ED	–	0...160	o. r.	o. r.
				24 / 60 / 6		–	0...189	o. r.	o. r.
				120 / 60 / 6		–	0...189	o. r.	o. r.
				240 / 60 / 6		–	0...189	o. r.	o. r.
				24 / DC / 5		0...145	0...145	o. r.	o. r.
				24 / 60 / 4		0...160	0...160	o. r.	o. r.
				120 / 60 / 4		0...160	0...160	o. r.	o. r.
				240 / 60 / 4		0...160	0...160	o. r.	o. r.
		1.6	0.07	24 / DC / 6.5	100 % ED	–	0...87	o. r.	o. r.
				24 / 60 / 6		–	0...109	o. r.	o. r.
				120 / 60 / 6		–	0...109	o. r.	o. r.
				240 / 60 / 6		–	0...109	o. r.	o. r.
				24 / DC / 5		0...80	0...80	o. r.	o. r.
				24 / 60 / 4		0...87	0...87	o. r.	o. r.
				120 / 60 / 4		0...87	0...87	o. r.	o. r.
				240 / 60 / 4		0...87	0...87	o. r.	o. r.
		2.0 [4.]	0.13	24 / DC / 6.5	100 % ED	–	0...73	o. r.	o. r.
				24 / 60 / 6		–	0...87	o. r.	o. r.
				120 / 60 / 6		–	0...87	o. r.	o. r.
				240 / 60 / 6		–	0...87	o. r.	o. r.
				24 / DC / 5		0...58	0...58	o. r.	o. r.
				24 / 60 / 4		0...80	0...80	o. r.	o. r.
				120 / 60 / 4		0...80	0...80	o. r.	o. r.
				240 / 60 / 4		0...80	0...80	o. r.	o. r.
	Manifold (FK01)	1.2	0.05	24 / DC / 6.5	100 % ED	–	0...160	o. r.	o. r.
				24 / 60 / 6		–	0...189	o. r.	o. r.
				120 / 60 / 6		–	0...189	o. r.	o. r.
				240 / 60 / 6		–	0...189	o. r.	o. r.
				24 / DC / 5		0...145	0...145	o. r.	o. r.
				24 / 60 / 4		0...160	0...160	o. r.	o. r.
				120 / 60 / 4		0...160	0...160	o. r.	o. r.
				240 / 60 / 4		0...160	0...160	o. r.	o. r.
		1.6	0.07	24 / DC / 6.5	100 % ED	–	0...87	o. r.	o. r.
				24 / 60 / 6		–	0...109	o. r.	o. r.
				120 / 60 / 6		–	0...109	o. r.	o. r.
				240 / 60 / 6		–	0...109	o. r.	o. r.
				24 / DC / 5		0...80	0...80	o. r.	o. r.
				24 / 60 / 4		0...87	0...87	o. r.	o. r.
				120 / 60 / 4		0...87	0...87	o. r.	o. r.
				240 / 60 / 4		0...87	0...87	o. r.	o. r.
		2.0 [4.]	0.13	24 / DC / 6.5	100 % ED	–	0...73	o. r.	o. r.
				24 / 60 / 6		–	0...87	o. r.	o. r.
				120 / 60 / 6		–	0...87	o. r.	o. r.
				240 / 60 / 6		–	0...87	o. r.	o. r.
				24 / DC / 5		0...58	0...58	o. r.	o. r.
				24 / 60 / 4		0...80	0...80	o. r.	o. r.
				120 / 60 / 4		0...80	0...80	o. r.	o. r.
				240 / 60 / 4		0...80	0...80	o. r.	o. r.

DTS 1000446518 EN Version: D Status: RL (released | freigegeben | valide) printed: 07.10.2026

valvesgo.com

Circuit function	Port connection	Orifice	C_v value water 1.)	Voltage/ Frequency/ Power	Maximum duty cycle	Pressure range 2.) (MAWP 3.))		Article no.	
						Ambient temperature + 167 °F	Ambient temperature + 131 °F	Brass body	Stainless steel body
						Air + water	Air + water	FKM seal	
		[mm]	[gal/min]	[V/Hz/W]		[psi]	[psi]		
CF D 3/2-way solenoid valve Direct-acting Normally open 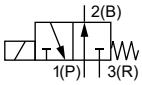	NPT ⅛	1.2	0.05	24 / DC / 5	100 % ED	0...145	0...145	o. r.	o. r.
				24 / 60 / 4		0...145	0...145	o. r.	o. r.
				120 / 60 / 4		0...145	0...145	o. r.	o. r.
				240 / 60 / 4		0...145	0...145	o. r.	o. r.
		1.6	0.07	24 / DC / 5	100 % ED	0...87	0...87	o. r.	o. r.
				24 / 60 / 4		0...87	0...87	o. r.	o. r.
				120 / 60 / 4		0...87	0...87	o. r.	o. r.
				240 / 60 / 4		0...87	0...87	o. r.	o. r.
		2.0 4.)	0.13	24 / DC / 6.5	100 % ED	–	0...116	o. r.	o. r.
				24 / DC / 5		0...87	0...87	o. r.	o. r.
				24 / 60 / 4		0...102	0...102	o. r.	o. r.
				120 / 60 / 4		0...102	0...102	o. r.	o. r.
				240 / 60 / 4		0...102	0...102	o. r.	o. r.
	Manifold (FK01)	1.2	0.05	24 / DC / 5	100 % ED	0...87	0...87	o. r.	o. r.
				24 / DC / 5.5		0...6	0...6	o. r.	o. r.
				24 / 60 / 4		0...87	0...87	o. r.	o. r.
				120 / 60 / 4		0...87	0...87	o. r.	o. r.
				240 / 60 / 4		0...87	0...87	o. r.	o. r.
		1.6	0.07	24 / DC / 5	100 % ED	0...87	0...87	o. r.	o. r.
				24 / 60 / 4		0...87	0...87	o. r.	o. r.
				120 / 60 / 4		0...87	0...87	o. r.	o. r.
				240 / 60 / 4		0...87	0...87	o. r.	o. r.
		2.0 4.)	0.13	24 / DC / 6.5	100 % ED	–	0...116	o. r.	o. r.
				24 / DC / 5		0...87	0...87	o. r.	o. r.
				24 / 60 / 4		0...102	0...102	o. r.	o. r.
				120 / 60 / 4		0...102	0...102	o. r.	o. r.
				240 / 60 / 4		0...102	0...102	o. r.	o. r.

o. r. = on request
1.) Measurement at + 68 °F, 14.5 2.) bar at the valve inlet and free outlet
2.) Pressure data: overpressure to atmospheric pressure and air as a medium
3.) Maximum allowable working pressure
4.) Limited swelling compensation

DTS 1000446518 EN Version: D Status: RL (released | freigegeben | valide) printed: 07.10.2026

valvesgo.com

DTS 1000446518 EN Version: D Status: RL (released | freigegeben | valide) printed: 07.10.2026

Banjo variant, coil UL Recognized (cURus)

Note:

- All valves are delivered without a cable plug.
- Coil size 24.5 mm [0.96 in]
- Orifices 1.6 mm and 2.0 mm on request.

Circuit function	Port connection	Orifice	Q_{Nn} value air [1.]	Voltage/Frequency/ Power	Maximum duty cycle	Medium pressure [2.] (MAWP [3.]) Ambient temperature max. + 131 °F resp. + 167 °F [4.] Air	Article no. FKM seal
		[mm]	[gal/min]	[V/Hz/W]		[psi]	
CF C 3/2-way solenoid valve Direct-acting Normally closed 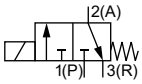	BJ01 P: G ⅛ A: G ⅛	1.2	9.2	24 / DC / 7	100 % ED	0...189	20077509
				24 / DC / 5.5		0...167	20087634
				24 / 50 / 4		0...189	20077511
				230 / 50 / 4		0...189	20070709
		1.6	12.7	24 / DC / 7	100 % ED	0...109	o. r.
				24 / DC / 5.5		0...87	o. r.
				24 / 50 / 4		0...109	o. r.
				230 / 50 / 4		0...109	o. r.
		2.0	19.8	24 / DC / 7	100 % ED	0...102	o. r.
				24 / DC / 5.5		0...80	o. r.
				24 / 50 / 4		0...87	o. r.
				230 / 50 / 4		0...87	o. r.
	BJ02 P: G ¼ A: G ¼	1.2	9.2	24 / DC / 7	100 % ED	0...189	20077512
				24 / DC / 5.5		0...167	20077514
				24 / 50 / 4		0...189	20077516
				230 / 50 / 4		0...189	20077519
		1.6	12.7	24 / DC / 7	100 % ED	0...109	o. r.
				24 / DC / 5.5		0...87	o. r.
				24 / 50 / 4		0...109	o. r.
				230 / 50 / 4		0...109	o. r.
		2.0	19.8	24 / DC / 7	100 % ED	0...102	o. r.
				24 / DC / 5.5		0...80	o. r.
				24 / 50 / 4		0...87	o. r.
				230 / 50 / 4		0...87	o. r.
	BJ03 P: NPT ¼ A: G ⅛	1.2	9.2	24 / DC / 7	100 % ED	0...189	20077523
				24 / DC / 5.5		0...167	20077564
				24 / 50 / 4		0...189	20077570
				230 / 50 / 4		0...189	20077574
		1.6	12.7	24 / DC / 7	100 % ED	0...109	o. r.
				24 / DC / 5.5		0...87	o. r.
				24 / 50 / 4		0...109	o. r.
				230 / 50 / 4		0...109	o. r.
		2.0	19.8	24 / DC / 7	100 % ED	0...102	o. r.
				24 / DC / 5.5		0...80	o. r.
				24 / 50 / 4		0...87	o. r.
				230 / 50 / 4		0...87	o. r.
	BJ04 P: NPT ⅛ A: G ¼	1,2	35	24 / DC / 7	100 % ED	0...13	20092001
				24 / DC / 5,5		0...11,5	20082092
				24 / 50 / 4		0...13	20137198
				230 / 50 / 4		0...13	20096957
		1,6	48	24 / DC / 7	100 % ED	0...7,5	o. r.
				24 / DC / 5,5		0...6	o. r.
				24 / 50 / 4		0...7,5	o. r.
				230 / 50 / 4		0...7,5	o. r.
		2,0	75	24 / DC / 7	100 % ED	0...7	o. r.
				24 / DC / 5,5		0...5,5	o. r.
				24 / 50 / 4		0...6	o. r.
				230 / 50 / 4		0...6	o. r.

valvesgo.com

Circuit function	Port connection	Orifice	Q_{Nn} value air 1.)	Voltage/Frequency/ Power	Maximum duty cycle	Medium pressure 2.) (MAWP 3.)) Ambient temperature max. + 131 °F resp. + 167 °F 4.) Air	Article no. FKM seal
		[mm]	[gal/min]	[V/Hz/W]		[psi]	
CF C 3/2-way solenoid valve Direct-acting Normally closed 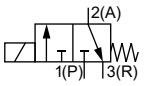	BJ05 P: G ¼ A: G ⅛	1.2	9.2	24 / DC / 7	100 % ED	0...189	20077596
				24 / DC / 5.5		0...167	20077598
				24 / 50 / 4		0...189	20077604
				230 / 50 / 4		0...189	20077609
		1.6	12.7	24 / DC / 7	100 % ED	0...109	o. r.
				24 / DC / 5.5		0...87	o. r.
				24 / 50 / 4		0...109	o. r.
				230 / 50 / 4		0...109	o. r.
		2.0	19.8	24 / DC / 7	100 % ED	0...102	o. r.
				24 / DC / 5.5		0...80	o. r.
				24 / 50 / 4		0...87	o. r.
				230 / 50 / 4		0...87	o. r.
	BJ06 P: G ⅛ A: G ¼	1.2	35	24 / DC / 7	100 % ED	0...13	20098864
				24 / DC / 5.5		0...11.5	20087550
				24 / 50 / 4		0...13	20098869
				230 / 50 / 4		0...13	20098870
		1.6	48	24 / DC / 7	100 % ED	0...7.5	o. r.
				24 / DC / 5.5		0...6	o. r.
				24 / 50 / 4		0...7.5	o. r.
				230 / 50 / 4		0...7.5	o. r.
		2.0	75	24 / DC / 7	100 % ED	0...7	o. r.
				24 / DC / 5.5		0...5.5	o. r.
				24 / 50 / 4		0...6	o. r.
				230 / 50 / 4		0...6	o. r.
	BJ07 P: NPT ⅛ A: G ⅛	1.2	9.2	24 / DC / 7	100 % ED	0...189	20077610
				24 / DC / 5.5		0...167	20077615
				24 / 50 / 4		0...189	20077618
				230 / 50 / 4		0...189	20077626
		1.6	12.7	24 / DC / 7	100 % ED	0...109	o. r.
				24 / DC / 5.5		0...87	o. r.
				24 / 50 / 4		0...109	o. r.
				230 / 50 / 4		0...109	o. r.
		2.0	19.8	24 / DC / 7	100 % ED	0...102	o. r.
				24 / DC / 5.5		0...80	o. r.
				24 / 50 / 4		0...87	o. r.
				230 / 50 / 4		0...87	o. r.

o. r. = on request
1.) For P1: 6 bar [87 psi] absolute and P2: 5 bar [73 psi] absolute
2.) Pressure data: overpressure to atmospheric pressure and air as a medium
3.) Maximum allowable working pressure
4.) Depending on the performance level

DTS 1000446518 EN Version: D Status: RL (released | freigegeben | valide) printed: 07.10.2026

valvesgo.com

valvesgo.com

Additional options

Note:
Available on request

Option	Variable Code	Description
Oxygen variants	NL02	Suitable for applications with oxygen (non-metal materials that are in contact with the medium are tested and approved according to BAM)
Increased purity requirements e.g. oil, grease and silicone-free	NL50/NL05	Wetted parts are specially cleaned and packaged in accordance with the valves
Increased tightness requirements	PC05	Leakage rate *less than 10^{-4} mbar l/sec
	PC08	Leakage rate *less than 10^{-5} mbar l/sec
	PC06	Leakage rate *less than 10^{-6} mbar l/sec
Vacuum variant	on request	–

8.5. Ordering chart accessories

Single manifold

Note:
Further ordering information can be found in chapter "5.4. Single manifold" on page 14.

Multiple manifold

Note:
Further ordering information can be found in chapter "5.5. Multiple manifold" on page 15.

Accessories for manifolds

Accessory	Features	Article no.
Threaded plug	With seal ring, G ⅛	005041
Cover plate	For unoccupied valve position	005100

DTS 1000446518 EN Version: D Status: RL (released | freigegeben | valide) printed: 07.10.2026

valvesgo.com

valvesgo.com

Accessories for G ⅛ threaded connections

Accessories	Material	Connection diameter [mm]	F [mm]	L [mm]	L [inch]	L1 [mm]	L1 [inch]	Article no.
Straight push-in connector with O-ring								
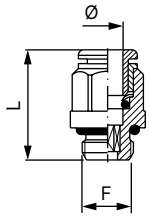	Nickel-plated brass	4	G ⅛	18.0	0.71	–	–	780001
		6	G ⅛	21.6	0.85	–	–	780003
		8	G ⅛	25.4	1	–	–	780005
Elbow screw fitting, rotatable with O-ring								
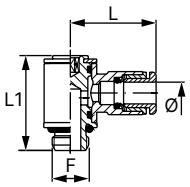	Nickel-plated brass	4	G ⅛	21.3	0.84	24.9	0.98	780081
		6	G ⅛	23.0	0.91	24.9	0.98	780082
		8	G ⅛	24.8	0.98	24.9	0.98	780086
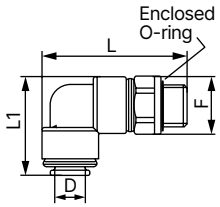	POM	4	G ⅛	35.5	1.4	24.0	0.94	782344
		6	G ⅛	39.5	1.56	27.0	1.06	782345
		8	G ⅛	41.5	1.63	30.0	1.18	782346

Cable plug Type 2516, form C according to DIN EN 175301 - 803

Note:

- Dimensions in mm
- Delivery of cable plug includes a flat seal and a fastening screw.
- For further variants see data sheet **Type 2516** ▸.

Cable plug	Dimensions	Variant	Voltage	Article no.
	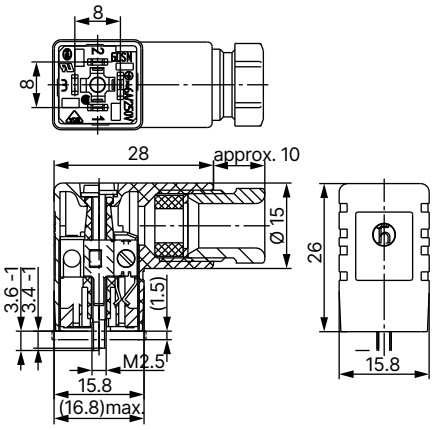	Without wiring	0...250 V AC/DC	303141
		With LED	12...24 V AC/DC	303145
		With LED and varistor	12...24 V AC/DC	303148
		With rectifier, LED and varistor	12...24 V AC/DC	303142

DTS 1000446518 EN Version: D Status: RL (released | freigegeben | valide) printed: 07.10.2026

valvesgo.com

Cable plug Type 2507, form B according to industry standard

Note:

- Dimensions in mm
- Delivery of cable plug includes a flat seal and a fastening screw.
- Refer to data sheet **Type 2507** ▸ for more information about the cable plug.

Cable plug	Dimensions	Variant	Voltage	Article no.
	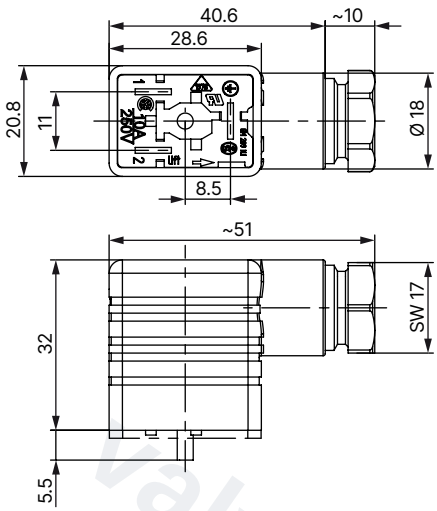	Without wiring (standard)	2...250 V AC/DC	423845
		With LED	24 V AC/DC	423849
		With LED and free-wheeling diode	12...24 V AC/DC	423851
		With rectifier, LED and varistor	2...250 V AC/DC	423854
			12...24 V AC/DC	423853

DTS 1000446518 EN Version: D Status: RL (released | freigegeben | valide) printed: 07.10.2026

valvesgo.com

valvesgo.com