bürkert
FLUID CONTROL SYSTEMS

T-diaphragm valve with pneumatic actuator in stainless steel (Type ELEMENT) for decentralised automation

- Valve body and diaphragm are available in various materials and variants
- Wetted surfaces from Ra ≤ 0.38 µm...≤ 1.6 µm (optionally electropolished)
- Available in all common connection sizes and variants

Product variants described in the data sheet may differ from the product presentation and description.

Can be combined with

Type 2034
Multifunction block solutions

Type 8691
Control head for decentralised automation of ELEMENT process valves

Type 8692
Digital electropneumatic positioner for integrated mounting on process control valves

Type 8695
Control head for decentralised automation of ELEMENT process valves

Type 8696
Digital electropneumatic positioner for integrated mounting on process control valves

Type 8098
FLOWave SAW flowmeter

Type description

The externally controlled diaphragm valve Type 2104 consists of a pneumatically operated piston actuator, a diaphragm and a T-valve body. The proven and robust actuator with stainless steel housing ensures use in hygienic or aggressive ambient conditions. The flow-efficient valve bodies with little dead space enable high flow rates and a wide range of possible uses. The valve body and the diaphragm are available in all common materials and variants. The actuator has a compact, autoclavable design with a large stainless steel housing and gap-free seals. The integration of automation units Type ELEMENT is possible in all configuration levels (can be retrofitted); a fieldbus interface can also be integrated. An explosion-proof ATEX/IECEx device variant is available.

It is a compact, smooth-surfaced and highly integrated system consisting of a valve and an automation unit with integrated pilot air ducts (no intake of ambient air). The add-on body is optionally available in plastic or stainless steel (can be rotated 360°). The valve offers the degrees of protection IP65/67 and NEMA Type 4X and displays high chemical resistance.

DTS 1000450600 EN Version: - Status: RL (released | freigegeben | valide) printed: 07.10.2026

© Christian Bürkert GmbH & Co. KG, Subject to alteration

Visit product website

valvesgo.com

Table of contents

1. General technical data 3

2. Control functions 4

3. Approvals and conformities 5

3.1. General notes 5
3.2. Conformity 5
3.3. Standards 5
3.4. Explosion protection 5
3.5. Foods and beverages/Hygiene 5
3.6. Others 6

4. Materials 7

4.1. Bürkert resistApp 7
4.2. Material specifications 7
4.3. Example of available diaphragm materials 8

5. Dimensions 9

5.1. Actuator 9
ELEMENT actuator 9
5.2. T-Body with welded connection 10
5.3. T-Body with clamp connection 15

6. Performance specifications 16

6.1. Medium pressure 16

7. Product accessories 17

8. Networking and combination with other Bürkert products 21

8.1. Possible combinations 21
For ELEMENT valve system Type 8802-TB with TopControl 21
For ELEMENT valve system Type 8802-TB with SideControl Remote 22
For ELEMENT valve system Type 8801-TB with control head or pneumatic control unit/position feedback 23

9. Ordering information 24

9.1. Bürkert eShop 24
9.2. Bürkert product filter 24
9.3. Bürkert Product Enquiry Form 24

DTS 1000450600 EN Version: - Status: RL (released | freigegeben | valide) printed: 07.10.2026

valvesgo.com

valvesgo.com

1. General technical data

Product properties	
Dimensions	Further information can be found in chapter "5. Dimensions" on page 9.
Material [1.)]	
Block body (VH) [1.)]	Stainless steel block material 1.4435 according to DIN EN 10088 and 316L according to ASTM A479 / A479M
Block body (VI) [1.)]	Stainless steel block material 1.4435 according to DIN EN 10088 and 316L according to ASME BPE (Table MM- 2.1.1, Ed. 2024) BN2 available on request
Diaphragm	EPDM (AD) [1.)], PTFE/EPDM (EA) [1.)], Advanced PTFE/EPDM (EU) [1.)], laminate of GYLON® and EPDM (ER) [1.)]
Actuator	DN 08...65, PPS DN 65...100, stainless steel 1.4308
Actuator casing	DN 08...65, stainless steel 1.4561 (316Ti) DN 65...100, stainless steel 1.4308
Diaphragm size	8...100
Standard surface quality [2.)]	
Block body (VH/VI) [1.)]	Internally electrically polished: Ra ≤ 0.38 µm (NO17) [1.)] (ASME BPE SF4 / DIN HE4) (externally Ra ≤ 1.6 µm) Internally mechanically polished: Ra ≤ 0.5 µm (NO14) [1.)] (ASME BPE SF1) (externally Ra ≤ 1.6 µm)
Performance data	
Maximum pilot pressure (SF A)	10 bar 7 bar for actuator size 130, 225 See "6.1. Medium pressure" on page 16
Pilot air port	Push-in connector for outer diameter, Ø 6 mm or ¼" (standard), thread G ⅛"
Medium data	
Operating medium	Neutral gases and liquids, highly purified, sterile, aggressive or abrasive mediums (see **resistance chart** ▶)
Medium temperature	
EPDM (AD) [1.)]	- 10 °C...+ 143 °C (steam sterilisation [4.)] max. + 150 °C for 60 min)
PTFE/EPDM (EA) [1.)]	- 10 °C...+ 130 °C (steam sterilisation [4.)] max. + 140 °C for 60 min)
Advanced PTFE/EPDM (EU) [1.)]	- 5 °C...+ 143 °C (steam sterilisation [4.)] max. + 150 °C for 60 min)
Laminate of GYLON® and EPDM (ER) [1.)]	- 5 °C...+ 130 °C (steam sterilisation [4.)] max. + 140 °C for 60 min)
Control medium	Neutral gases, air
Product connections	
Port connection [2.)]	
Nominal diameter	DN 06...DN 100 (⅛"...4")
Stainless steel body [2.)]	
Welded connection [2.)]	DIN EN ISO 1127 / ISO 4200 / DIN 11866 series B DIN 11850 - 2 / DIN 11866 series A / DIN EN 10357 series A ASME BPE / DIN 11866 series C
Clamp connection [2.)]	DIN 32676 series A (DIN pipe) DIN 32676 series B (ISO pipe) ASME BPE
Environment and installation	
Installation position	See **operating manual Type 2104** ▶
Ambient temperature	- 10 °C...+ 60 °C [3.)], autoclavable

1.) This information is part of the product key (see "9.3. Bürkert Product Enquiry Form" on page 24).
2.) Other variants are available on request.
3.) For standard variant, variants with higher temperatures possible
4.) Extending the sterilisation time is permitted, but may affect the service life and maintenance intervals.

DTS 1000450600 EN Version: - Status: RL (released | freigegeben | valide) printed: 07.10.2026

valvesgo.com

2. Control functions

Symbol	Description
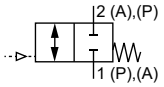	**Control function A (CF A)** Pneumatically operated T-valve Normally closed by spring force
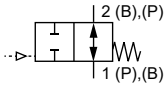	**Control function B (CF B)** Pneumatically operated T-valve Normally opened by spring force
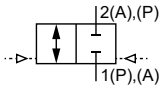	**Control function I (CF I)** Pneumatically operated T-valve on either side Switching position dependent on external control
3-position actuator	
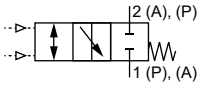	**Control function A (CF A)** Pneumatically operated 2/3-way position valve Bidirectional Normally closed by spring force

DTS 1000450600 EN Version: - Status: RL (released | freigegeben | valide) printed: 07.10.2026

valvesgo.com

valvesgo.com

3. Approvals and conformities

3.1. General notes

- The approvals and conformities listed below must be stated when making enquiries. This is the only way to ensure that the product complies with all required specifications.
- Not all available variants can be supplied with the below mentioned approvals or conformities.

3.2. Conformity

In accordance with the Declaration of Conformity, the product is compliant with the EU Directives.

3.3. Standards

The applied standards which are used to demonstrate compliance with the EU Directives are listed in the EU-Type Examination Certificate and/or the EU Declaration of Conformity.

3.4. Explosion protection

Approval	Description
	Optional: Explosion protection (valid for the variable code PX51) As a category 2 device suitable for zone 1/21 and zone 2/22. **ATEX:** EPS 18 ATEX 2 008 X II 2G Ex h IIC T4...T2 Gb II 2D Ex h IIIC T135 °C...T300 °C Db **IECEx:** IECEx EPS 18.0007X Ex h IIC T4...T2 Gb Ex h IIIC T135 °C...T300 °C Db

Temperature class	T2	T3	T4
Maximum surface temperature	+ 300 °C	+ 200 °C	+ 135 °C
Ambient temperature	- 40 °C...+ 130 °C	- 40 °C...+ 130 °C	- 40 °C...+ 100 °C
Maximum medium temperature	+ 285 °C	+ 185 °C	+ 125 °C

Note: The ambient and medium temperature range may be limited by non-ex-relevant specifications. Observe the Operating Instructions.

3.5. Foods and beverages/Hygiene

Conformity	Description
	3-A Sanitary Standards Inc. (valid for the variable code PE05) The products comply with 3-A Sanitary Standards Inc (3-A SSI) as per certificate.
FDA	**FDA – Code of Federal Regulations** The diaphragms made of EPDM (AD), PTFE/EPDM (EA), Advanced PTFE/EPDM (EU) and laminate of GYLON® and EPDM (ER) comply with the Code of Federal Regulations published by the FDA (Food and Drug Administration, USA).
USP	**United States Pharmacopeial Convention (USP)** The diaphragms made of EPDM (AD), PTFE/EPDM (EA), Advanced PTFE/EPDM (EU) and laminate of GYLON® and EPDM (ER) are tested according to USP Class VI.
	EC Regulation 1935/2004 of the European Parliament and of the Council The diaphragms made of EPDM (AD), PTFE/EPDM (EA), Advanced PTFE/EPDM (EU) and laminate of GYLON® and EPDM (ER) are suitable for use with food and beverages (according to EC Regulation 1935/2004/EC).

DTS 1000450600 EN Version: - Status: RL (released | freigegeben | valide) printed: 07.10.2026

valvesgo.com

3.6. Others

Conformity	Description
TA Luft	Technical instruction on air quality control (valid for the variable code PM01)

DTS 1000450600 EN Version: - Status: RL (released | freigegeben | valide) printed: 07.10.2026

valvesgo.com

valvesgo.com

4. Materials

4.1. Bürkert resistApp

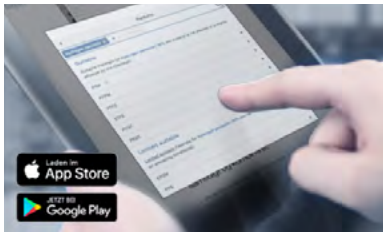

Bürkert resistApp – Chemical resistance chart

You want to ensure the reliability and durability of the materials in your individual application case? Verify your combination of media and materials on our website or in our resistApp.

Start chemical resistance check

4.2. Material specifications

Note:
The exemplary representation may differ from the actual product.

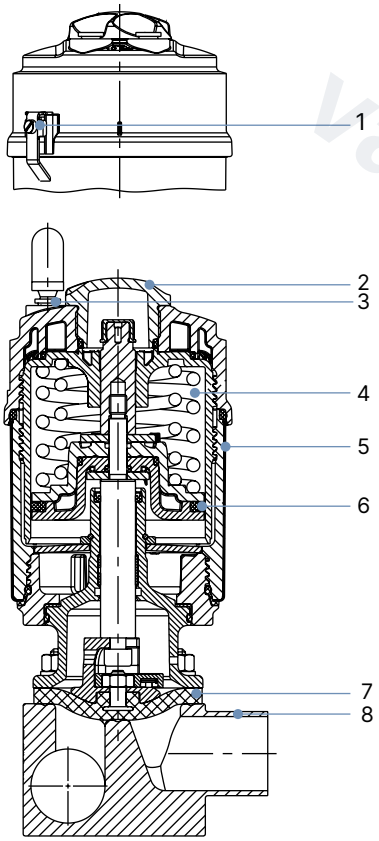

No.	Element	Material
1	Ground terminal	Stainless steel 1.4301/1.4305 (only for ATEX/IECEx variant)
2	Transparent cap	Polysulfone PSU
3	Pilot air ports	Push-in connector PP (standard), Thread G ⅛" stainless steel 1.4305
4	Actuator	Polyphenylene sulphide PPS
5	Cover	Stainless steel 1.4561 (316Ti)
6	Piston seal	FKM
7	Diaphragm	EPDM (AD), PTFE/EPDM (EA), advanced PTFE/EPDM (EU), laminate of GYLON® and EPDM (ER)
8	Valve body	See "1. General technical data" on page 3.

DTS 1000450600 EN Version: - Status: RL (released | freigegeben | valide) printed: 07.10.2026

valvesgo.com

valvesgo.com

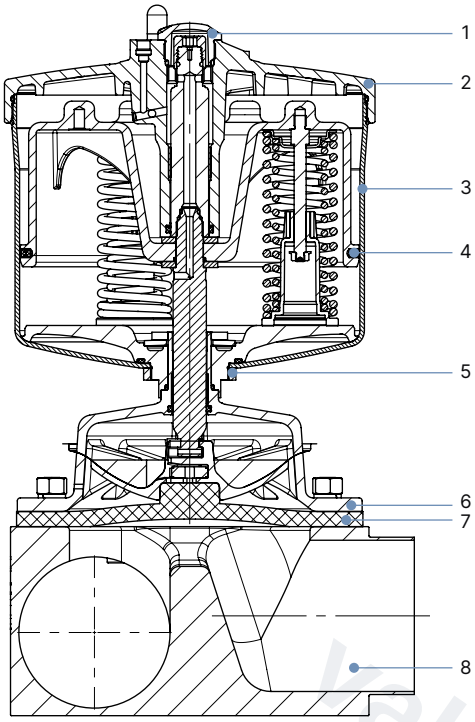

No.	Element	Material
1	Transparent cover	Polysulfon PSU
2	Drive cover	Stainless steel 1.4308
3	Barrel liner	Stainless steel 1.4404
4	Piston seal	FKM
5	Nut	Stainless steel 1.4301
6	Diaphragm base	Stainless steel CF3M
7	Diaphragm	EPDM (AD), PTFE/EPDM (EA), Advanced PTFE/EPDM (EU), laminate of GYLON® and EPDM (ER)
8	Valve body	See "1. General technical data" on page 3.

4.3. Example of available diaphragm materials

The diaphragms have been developed to meet the unique challenges of hygienic and sterile requirements. Bürkert offers diaphragms with precise material composition and high accuracy. Bürkert diaphragms are available in a wide range of materials which have been tested and proven in applications in the food and beverage, biotechnology, pharmaceutical and cosmetics industries. The diaphragms are tested during development and production to ensure reliability under difficult process conditions.

- EPDM (AD)
- PTFE/EPDM (EA)
- Advanced PTFE/EPDM (EU)
- Laminate of GYLON® and EPDM (ER)

Further information can be found in our flyer "Diaphragm competence for hygienic applications" on our **website** ▶.

DTS 1000450600 EN Version: - Status: RL (released | freigegeben | valide) printed: 07.10.2026

valvesgo.com

5. Dimensions

5.1. Actuator

ELEMENT actuator

Note:
Dimensions in mm, unless otherwise stated

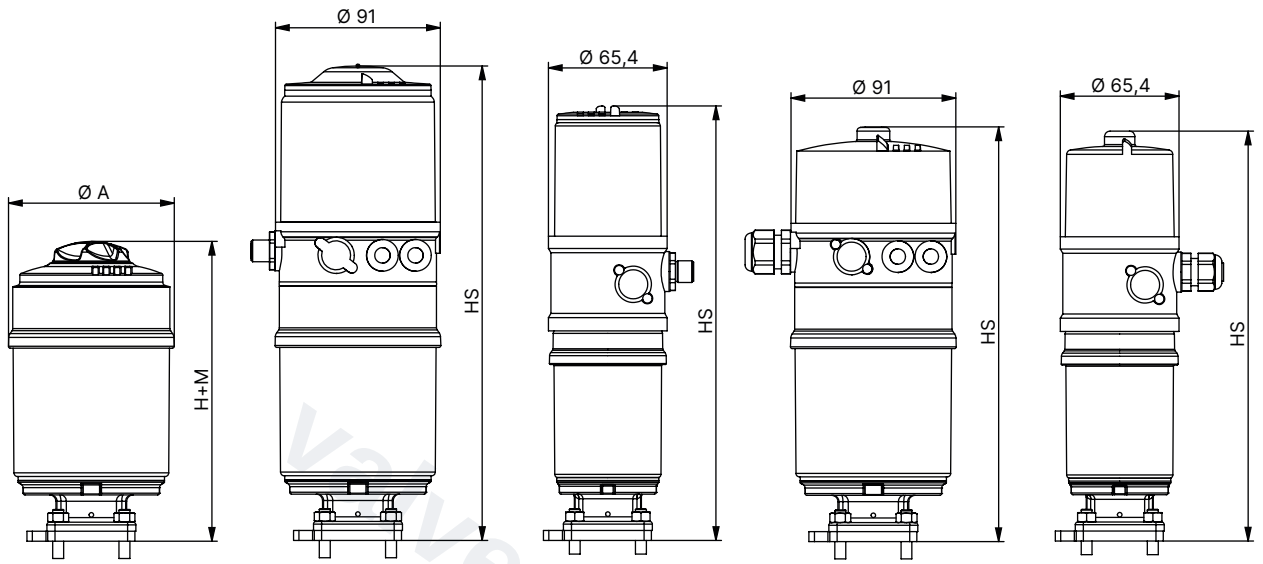

2104 with 360° rotatable interface, stainless steel

2104 with control head 8691

2104 with control head 8695

2104 with pneumatic control unit 8690

2104 with pneumatic control unit 8697

Diaphragm size	Actuator size Ø	Ø A	HS with		H+M (MT86)
			8691 / 8695	8690 / 8697	
8	50 (D)	65	232	219	138
15	50 (D)	65	240	226	146
	70 (M)	92	262	229	166
20	70 (M)	92	262	229	166
25	70 (M)	92	268	235	172
	90 (N)	120	301	269	205
32	90 (N)	120	313	280	217
40	90 (N)	120	317	285	221
	130 (P)	160	370	337	274
50	130 (P)	160	379	346	282
65	130 (P)	160	383	350	287
65	225 (L)	245	427	395	330
80	225 (L)	245	433	401	336
100	225 (L)	245	429	397	332

DTS 1000450600 EN Version: - Status: RL (released | freigegeben | valide) printed: 07.10.2026

valvesgo.com

5.2. T-Body with welded connection

Note:
Dimensions in mm, unless otherwise stated

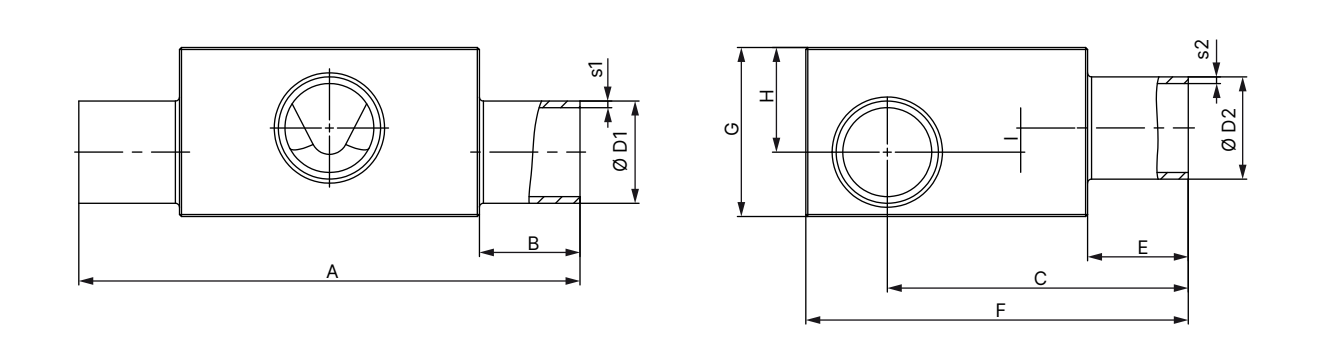

Diaphragm size	Port 1 – Port 2 DN	Ø D1	s1	Ø D2	s2	A	B	C	E	F	G	H	I	Product key [1.)] (Port 1 – Port 2)
DIN EN ISO 1127 / ISO 4200 / DIN 11866 series B														
8	8...8	13.5	1.6	13.5	1.6	78.0	20.0	47.2	20.0	60.0	24.0	15.0	5.0	SA40-SA40
	10...8	17.2		13.5		78.0		49.0		60.0	29.0	18.0	8.0	SA41-SA40
	10...10	17.2		17.2		78.0		49.0		60.0	29.0	18.0	8.0	SA41-SA41
	15...8	21.3		13.5		78.0		51.1		64.0	34.0	21.0	11.0	SA42-SA40
	15...10	21.3		17.2		78.0		51.1		64.0	34.0	21.0	11.0	SA42-SA41
	20...8	26.9		13.5		88.0	25.0	53.9		70.0	38.0	23.0	13.0	SA43-SA40
	20...10	26.9		17.2		88.0		53.9		70.0	38.0	23.0	13.0	SA43-SA41
	25...8	33.7	2.0	13.5		88.0		53.9		76.0	45.0	26.0	16.0	SA44-SA40
	25...10	33.7		17.2		88.0		53.9		76.0	45.0	26.0	16.0	SA44-SA41
	32...8	42.4		13.5		88.0		60.5		84.0	52.0	29.0	19.0	SA45-SA40
	32...10	42.4		17.2		88.0		61.2		84.0	52.0	29.0	19.0	SA45-SA41
	40...8	48.3		13.5		88.0		64.2		90.0	57.0	31.0	21.0	SA46-SA40
	40...10	48.3		17.2		88.0		64.2		90.0	57.0	31.0	20.0	SA46-SA41
	50...8	60.3		13.5		98.0	30.0	70.2		102.0	66.0	34.0	24.0	SA47-SA40
	50...10	60.3		17.2		98.0		70.2		102.0	66.0	34.0	24.0	SA47-SA41
	65...8	76.1		13.5		98.0		78.1		118.0	80.0	40.0	30.0	SA48-SA40
	80...8	88.9	2.3	13.5		98.0		84.2		131.0	92.0	46.0	36.0	SA49-SA40
	80...10	88.9		17.2		98.0		84.2		131.0	92.0	46.0	35.0	SA49-SA41

DTS 1000450600 EN Version: - Status: RL (released | freigegeben | valide) printed: 07.10.2026

valvesgo.com

Diaphragm size	Port 1 – Port 2 DN	Ø D1	s1	Ø D2	s2	A	B	C	E	F	G	H	I	Product key [1.)] (Port 1 – Port 2)
15	8...8	13.5	1.6	13.5	1.6	93.0	20.0	52.1	20.0	70.0	27.0	17.0	4.5	SA40-SA40
	10...8	17.2		13.5		93.0		53.9		70.0	31.0	18.0	4.5	SA41-SA40
	10...10	17.2		17.2		93.0		54.9		70.0	28.0	16.0	2.5	SA41-SA41
	15...8	21.3		13.5		93.0		57.0		71.0	34.5	21.0	7.5	SA42-SA40
	15...15	21.3		21.3		93.0		56.0		71.0	35.0	21.0	6.5	SA42-SA42
	20...8	26.9		13.5		103.0	25.0	59.8		76.0	41.0	25.0	11.5	SA43-SA40
	20...10	26.9		17.2		103.0		59.8		78.0	42.0	25.0	11.5	SA43-SA41
	20...15	26.9		21.3		103.0		59.8		78.0	42.0	25.0	11.5	SA43-SA42
	25...10	33.7	2.0	17.2		103.0		63.0		83.0	48.0	28.0	14.5	SA44-SA41
	25...15	33.7		21.3		103.0		62.8		83.0	47.0	28.0	14.5	SA44-SA42
	32...8	42.4		13.5		103.0		67.1		91.0	56.0	32.0	18.5	SA45-SA40
	32...10	42.4		17.2		103.0		67.1		91.0	56.0	32.0	18.5	SA45-SA41
	32...15	42.4		21.3		103.0		67.1		91.0	56.0	32.0	18.5	SA45-SA42
	40...8	48.3		13.5		103.0		70.1		97.0	63.0	35.0	21.5	SA46-SA40
	40...10	48.3		17.2		103.0		70.1		97.0	63.0	35.0	21.5	SA46-SA41
	40...15	48.3		21.3		103.0		70.1		97.0	63.0	35.0	21.5	SA46-SA42
	50...8	60.3		13.5		113.0	30.0	76.1		109.0	72.0	38.0	24.5	SA47-SA40
	50...10	60.3		17.2		113.0		76.1		109.0	72.0	38.0	24.5	SA47-SA41
	50...15	60.3		21.3		113.0		76.1		109.0	72.0	38.0	24.5	SA47-SA42
	65...8	76.1		13.5		113.0		84.0		125.0	85.0	44.0	30.5	SA48-SA40
	65...15	76.1		21.3		113.0		84.0		125.0	85.0	44.0	30.5	SA48-SA42
	80...8	88.9	2.3	13.5		113.0		90.1		140.0	99.0	52.0	38.5	SA49-SA40
	80...10	88.9		17.2		113.0		90.1		137.0	94.0	47.0	33.5	SA49-SA41
	80...15	88.9		21.3		113.0		90.1		137.0	94.0	47.0	33.5	SA49-SA42
	100...15	114.3		21.3		113.0		102.8		163.0	120.0	60.0	46.5	SA39-SA42
20	20...20	26.9	1.6	26.9	1.6	114.0	25.0	70.3	25.0	87.0	40.0	24.0	6.0	SA43-SA43
	25...20	33.7	2.0	26.9		114.0		73.3		94.0	48.0	28.0	10.0	SA44-SA43
	32...20	42.4		26.9		114.0		78.6		102.0	57.0	33.0	15.0	SA45-SA43
	40...20	48.3		26.9		114.0		80.6		108.0	63.0	35.0	17.0	SA46-SA43
	50...20	60.3		26.9		124.0	30.0	87.0		120.8	72.0	39.0	21.0	SA47-SA43
	65...20	76.1		26.9		124.0		94.5		136.0	86.0	45.0	27.0	SA48-SA43
	80...20	88.9	2.3	26.9		124.0		100.6		148.0	94.0	47.0	29.0	SA49-SA43
	100...20	114.3		26.9		124.0		113.3		173.0	120.0	60.0	42.0	SA39-SA43
25	25...25	33.7	2.0	33.7	2.0	124.5	25.0	78.6		98.0	53.0	33.0	13.0	SA44-SA44
	32...25	42.4		33.7		124.5		82.9		107.0	62.0	38.0	18.0	SA45-SA44
	40...25	48.3		33.7		124.5		85.9		114.0	69.0	41.0	21.0	SA46-SA44
	50...25	60.3		33.7		134.5	30.0	81.9		125.0	78.0	45.0	25.0	SA47-SA44
	65...25	76.1		33.7		134.5		99.8		142.0	94.0	52.0	32.0	SA48-SA44
	80...25	88.9	2.3	33.7		134.5		105.9		153.0	101.0	54.0	34.0	SA49-SA44
	150...25	168.3	2.6	33.7		134.5		145.3		232.0	174.0	87.0	67.0	SA69-SA44
40	32...32	42.4	2.0	42.4		152.0	25.0	98.0		122.0	62.0	38.0	9.4	SA45-SA45
	40...32	48.3		42.4		152.0		100.0		128.0	68.0	41.0	12.4	SA46-SA45
	40...40	48.3		48.3		152.0		100.0		128.0	68.0	41.0	12.4	SA46-SA46
	50...32	60.3		42.4		162.0	30.0	106.0		140.0	82.0	48.0	19.4	SA47-SA45
	50...40	60.3		48.3		162.0		106.0		140.0	82.0	48.0	19.4	SA47-SA46
	65...40	76.1		48.3		162.0		113.9		155.0	97.0	55.0	26.4	SA48-SA46
	80...32	88.9	2.3	42.4		162.0		120.0		168.0	108.0	60.0	31.4	SA49-SA45
	80...40	88.9		48.3		162.0		120.0		168.0	108.0	60.0	31.4	SA49-SA46
	100...32	114.3		42.4		162.0		132.7		193.0	129.0	68.0	39.4	SA39-SA45
	100...40	114.3		48.3		162.0		132.7		193.0	129.0	68.0	39.4	SA39-SA46

DTS 1000450600 EN Version: - Status: RL (released | freigegeben | valide) printed: 07.10.2026

valvesgo.com

Diaphragm size	Port 1 – Port 2 DN	Ø D1	s1	Ø D2	s2	A	B	C	E	F	G	H	I	Product key [1.)] (Port 1 – Port 2)
50	50...50	60.3	2.0	60.3	2.0	188.0	30.0	120.2	30.0	154.0	82.0	48.0	12.5	SA47-SA47
	65...50	76.1		60.3		188.0		128.1		170.0	100.0	56.0	20.5	SA48-SA47
	80...50	88.9	2.3	60.3		188.0		134.2		183.0	110.0	61.0	25.5	SA49-SA47
	100...50	114.3		60.3		188.0		146.9		208.0	131.0	70.0	34.5	SA39-SA47
	150...50	168.3	2.6	60.3		188.0		173.6		261.0	176.0	88.0	52.5	SA69-SA47
65	65...65	76.1	2.0	76.1		210		144.4		186.0	97.0	55.0	12.9	SA48-SA48
	80...65	88.9	2.3	76.1		210		148.7		197.0	111.0	63.0	20.5	SA49-SA48
	100...65	114.3		76.1		210		161.4		222.0	135.0	74.0	31.5	SA39-SA48
80	80...80	88.9		88.9	2.3	255		163.1		212.0	119.0	71.0	20.0	SA49-SA49
	100...80	114.3		88.9		255		177.8		239.0	144.0	83.0	32.0	SA39-SA49
100	100	114.3		114.3		290		209.1		270.0	133.0	72.0	8.5	SA39-SA39
DIN 11850 - 2 / DIN 11866 series A / DIN EN 10357 series A														
8	10...10	13.0	1.5	13.0	1.5	78.0	20.0	47.0	20.0	60.0	24.0	15.0	5.0	SD40-SD40
	20...10	23.0		13.0		88.0	25.0	52.0		66.0	36.0	22.0	12.0	SD43-SD40
15	15...15	19.0		19.0		93.0	20.0	55.9		70.0	33.0	20.0	6.5	SD42-SD42
	20...15	23.0		19.0		103.0		57.9		72.0	37.0	22.5	9.0	SD43-SD42
	25...15	29.0		19.0		103.0	25.0	60.9		78.0	43.0	26.0	12.5	SD44-SD42
	32...15	35.0		19.0		103.0		63.9		84.0	49.0	29.0	15.5	SD45-SD42
	40...15	41.0		19.0		103.0		66.9		91.0	56.0	31.0	17.5	SD46-SD42
	50...15	53.0		19.0		113.0	30.0	72.9		102.0	65.0	36.0	22.5	SD47-SD42
20	20...20	23.0		23.0		114.0	25.0	68.7	25.0	85.0	36.0	21.0	–	SD43-SD43
	32...20	35.0		23.0		114.0		74.4		95.0	50.0	29.0	11.0	SD45-SD43
	40...20	41.0		23.0		114.0		77.4		101.0	56.0	32.0	14.0	SD46-SD43
25	25...25	29.0		29.0		124.5	25.0	76.7		98.0	48.0	30.0	10.0	SD44-SD44
	40...25	41.0		29.0		124.5		82.7		106.0	61.0	38.0	18.0	SD46-SD44
	50...25	53.0		29.0		134.5	30.0	88.7		120.0	73.0	44.0	24.0	SD47-SD44
40	32...32	35.0		35.0		152.0	25.0	95.0		119.0	52.0	32.0	9.0	SD45-SD45
	40...40	41.0		41.0		152.0		97.3		121.0	62.0	37.0	8.4	SD46-SD46
	50...40	53.0		41.0		162.0	30.0	102.8		133.0	75.0	45.0	16.4	SD47-SD46
50	50...50	53.0		53.0		188.0		117.0	30.0	147.0	74.0	44.0	8.5	SD47-SD47
65	65...65	70.0	2.0	70.0	2.0	210.0		142.0		179.0	89.0	52.0	14.0	SD48-SD48
	80...65	85.0		70.0		210.0		149.5		194.0	104.0	59.5	21.5	SD49-SD48
	100...65	104.0		70.0		210.0		–		–	–	–	–	SD50-SD48
80	80...80	85.0		85.0		255.0		45.0		208.0	112.0	67.0	22.0	SD49-SD49
	100...80	104.0		85.0		250.0		172.1		227.0	132.0	77.0	32.0	SD50-SD49
100	100	104.0		104.0		293.0		211.5		267.0	125.0	70.0	11.0	SD50-SD50

DTS 1000450600 EN Version: - Status: RL (released | freigegeben | valide) printed: 07.10.2026

valvesgo.com

Diaphragm size	Port 1 – Port 2 DN	Ø D1	s1	Ø D2	s2	A	B	C	E	F	G	H	I	Product key [1.)] (Port 1 – Port 2)
ASME BPE / DIN 11866 Reihe C														
8	20...8	19.05	1.65	6.35	0.89	88.0	25.0	49.9	20.0	61.0	32.0	20.0	10.0	SA93-SA90
	25...10	25.40		9.53		88.0		53.0		68.0	38.0	23.0	13.0	SODF-SA91
	40...8	38.10		6.35		88.0		59.4		80.0	49.0	28.0	18.0	SODH-SA90
	50...8	50.80		6.35		98.0	30.0	65.8		93.0	59.0	32.0	22.0	SODI-SA90
	65...8	63.50		6.35		98.0		72.1		106.0	70.0	36.0	26.0	SODJ-SA90
15	15...15	12.70		12.70	1.65	93.0	20.0	53.2		70.0	27.0	13.5	–	SA92-SA92
	20...15	19.05		12.70		103.0		55.8		70.0	31.0	18.5	5.0	SA93-SA92
	25...15	25.40		12.70		103.0		59.0		75.0	40.0	24.0	10.5	SODF-SA92
	40...15	38.10		12.70		103.0	25.0	65.3		88.0	54.0	31.0	17.5	SODH-SA92
	50...15	50.80		12.70		113.0	30.0	71.7		100.0	64.0	35.0	21.5	SODI-SA92
	65...15	63.50		12.70		113.0		78.0		113.0	73.0	38.0	24.5	SODJ-SA92
	80...15	76.20		12.70		113.0		84.4		125.0	84.0	43.0	29.5	SODK-SA92
20	20...20	19.05		19.05		114.0	25.0	66.3	25.0	85.0	36.0	18.0	–	SA93-SA93
	25...20	25.40		19.05		114.0		69.2		88.0	40.0	24.0	6.0	SODF-SA93
	40...20	38.10		19.05		114.0		75.8		98.0	53.0	31.0	13.0	SODH-SA93
	50...20	50.80		19.05		124.0	30.0	82.2		111.0	66.0	37.0	19.0	SODI-SA93
	65...20	63.50		19.05		124.0		88.5		123.0	75.0	40.0	22.0	SODJ-SA93
	80...20	76.20		19.05		124.0		94.9		136.0	85.0	44.0	26.0	SODK-SA93
	100...20	101.60	2.11	19.05		124.0		107.1		161.0	108.0	54.0	36.0	SODL-SA93
25	25...25	25.40	1.65	25.40		124.5	25.0	74.8		95.0	42.0	26.0	6.0	SODF-SODF
	40...25	38.10		25.40		124.5		81.1		103.0	58.0	36.0	16.0	SODH-SODF
	50...25	50.80		25.40		134.5	30.0	87.5		120.0	75.0	44.0	24.0	SODI-SODF
	65...25	63.50		25.40		134.5		93.8		129.0	82.0	47.0	27.0	SODJ-SODF
	80...25	76.20		25.40		134.5		100.2		142.0	94.0	52.0	32.0	SODK-SODF
40	40...40	38.10		38.10		152.0	25.0	99.6		121.0	58.0	35.0	6.4	SODH-SODH
	50...40	50.80		38.10		162.0	30.0	101.6		131.0	72.0	43.0	14.4	SODI-SODH
	65...40	63.50		38.10		162.0		107.9		143.0	85.0	50.0	21.4	SODJ-SODH
	80...40	76.20		38.10		162.0		114.3		156.0	98.0	56.0	27.4	SODK-SODH
50	50...50	50.80		50.80		188.0		115.8	30.0	145.0	71.0	42.0	6.5	SODI-SODI
	65...50	63.50		50.80		188.0		122.1		157.0	85.0	50.0	14.5	SODJ-SODI
	65...65	63.50		63.50		188.0		122.1		158.0	86.0	50.0	14.5	SODJ-SODJ
	80...50	76.20		50.80		188.0		128.5		169.0	98.0	56.0	20.5	SODK-SODI
	100...65	101.60	2.11	63.50		188.0		140.7		195.0	120.0	66.0	30.5	SODL-SODJ
65	65...65	63.50	1.65	63.50		210.0		136.6		172.0	84.0	49.0	6.5	SODJ-SODJ
	80...65	76.20		63.50		210.0		145.0		187.0	99.0	57.0	14.5	SODK-SODJ
	100...65	101.60	2.11	63.50		210.0		155.2		210.0	120.0	66.0	23.5	SODL-SODJ
80	80...80	76.20	1.65	76.20		255.0		157.35		199.0	106.0	64.0	6.0	SODK-SODK
	100...80	101.60	2.11	76.20		255.0		169.6		224.0	131.0	77.0	26.0	SODL-SODK
100	100	101.60		101.60	2.11	290.0		207.0		260.0	120.0	67.0	10.0	SODL-SODL

DTS 1000450600 EN Version: - Status: RL (released | freigegeben | valide) printed: 07.10.2026

valvesgo.com

Diaphragm size	Port 1 – Port 2 DN	Ø D1	s1	Ø D2	s2	A	B	C	E	F	G	H	I	Product key [1.)] (Port 1 – Port 2)
SMS 3008														
25	25...25	25.0	1.2	25.0	1.2	124.5	25.0	75.0	25.0	95.0	43.0	27.0	7.0	SA60-SA60
	40...25	38.0		25.0		124.5		81.5		103.0	58.0	36.0	16.0	SA62-SA60
	50...25	51.0		25.0		134.5	30.0	88.0		118.0	72.0	42.0	22.0	SA63-SA60
40	40...40	38.0		38.0		152.0	25.0	95.6		121.0	58.0	35.0	6.4	SA62-SA62
	50...40	51.0		38.0		162.0	30.0	102.1		131.0	73.0	44.0	15.4	SA63-SA62
50	50...50	51.0		51.0		188.0		120.2	30.0	154.0	82.0	48.0	2.5	SA63-SA63
DIN 11850 - 0														
8	04...04	6.0	1.0	6.0	1.0	78.0	20.0	44.0	20.0	60.0	15.0	6.5	0.0	SC40-SC40
	06...06	8.0		8.0		75.0	17.5	46.5		60.0	13.0	7.0	0.0	SC41-SC41
	40...04	40.0	1.5	6.0		88.0	25.0	60.5		83.0	51.0	29.0	19.0	SC47-SC40
	40...8	40.0		10.0		88.0		60.5		83.0	51.0	29.0	19.0	SC47-SC42
	50...04	52.0		6.0		98.0	30.0	66.5		95.0	60.0	32.0	22.0	SC48-SC40
15	50...15	52.0		18.0	1.5	113.0	30.0	72.4		101.0	65.0	36.0	22.5	SC48-SC43
25	25...25	28.0		28.0		124.5	25.0	76.2	25.0	95.0	46.0	29.0	9.0	SC45-SC45
	50...25	52.0		28.0		134.5	30.0	91.2		120.0	71.0	42.0	22.0	SC48-SC45
40	25...32	28.0		34.0		152.0	25.0	90.3		122.0	58.0	32.0	3.4	SC45-SC46
	50...32	52.0		34.0		162.0	30.0	102.3		132.0	75.0	45.0	16.4	SC48-SC46
50	50...50	52.0		52.0		188.0	30.0	116.5	30.0	147.0	73.0	43.0	7.5	SC48-SC48

1.) This information is part of the product key (see "9.3. Bürkert Product Enquiry Form" on page 24).

DTS 1000450600 EN Version: - Status: RL (released | freigegeben | valide) printed: 07.10.2026

valvesgo.com

valvesgo.com

5.3. T-Body with clamp connection

Note:

- Dimensions in mm, unless otherwise stated
- Clamp dimensions must be added to the welded connection dimensions.

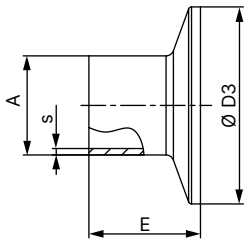

Port connection [mm]	Port connection [inch]	A	s	D3	E	Product key [1.)]
DIN 32676 series A (DIN pipe)						
10	–	13	1.5	34.0	18	TD41
15	–	19	1.5	34.0	18	TD42
20	–	23	1.5	34.0	18	TD43
25	–	29	1.5	50.5	21.5	TD44
32	–	35	1.5	50.5	21.5	TD45
40	–	41	1.5	50.5	21.5	TD46
50	–	53	1.5	64.0	21.5	TD47
65	–	70	2.0	91.0	28.0	TD48
80	–	85	2.0	106.0	28.0	TD49
100	–	104	2.0	119.0	28.0	TD50
DIN 32676 series B (ISO pipe)						
8	–	13.5	1.6	25.0	28.6	TC40
8	–	13.5	1.6	34.0 [2.)]	28.6	TC51 [2.)]
10	–	17.2	1.6	34.0 [2.)]	28.6	TC41 [2.)]
15	–	21.3	1.6	34.0 [2.)]	28.6	TC42 [2.)]
15	–	21.3	1.6	50.5	28.6	TC52
20	–	26.9	1.6	50.5	28.6	TC43
25	–	33.7	2.0	50.5	28.6	TC44
32	–	42.4	2.0	50.5 [2.)]	28.6	TC45 [2.)]
40	–	48.3	2.0	64.0	28.6	TC46
50	–	60.3	2.0	77.5	28.6	TC47
65	–	76.1	2.0	91.0	28.6	TC48
80	–	88.9	2.3	106.0	28.6	TC49
100	–	114.3	2.3	130.0	28.6	TC50
ASME BPE						
8	¼	6.35	0.89	25.0	28.6	TG50
10	⅜	9.53	0.89	25.0	28.6	TG01
15	½	12.7	1.65	25.0	28.6	TG02
20	¾	19.05	1.65	25.0	28.6	TG03
25	1	25.4	1.65	50.5	28.6	TG04
40	1½	38.1	1.65	50.5	28.6	TG05
50	2	50.8	1.65	64.0	28.6	TG06
65	2½	63.5	1.65	77.5	28.6	TG07
80	3	76.2	1.65	91.0	28.6	TG08
100	4	101.6	2.11	119.0	28.6	TG09

1.) This information is part of the product key (see "9.3. Bürkert Product Enquiry Form" on page 24).
2.) With plastic housings, a temperature limitation due to housing material is possible.

DTS 1000450600 EN Version: - Status: RL (released | freigegeben | valide) printed: 07.10.2026

valvesgo.com

6. Performance specifications

6.1. Medium pressure

Information for control function A

Note:

- For low operating pressures, optional variants with reduced spring force (EC04) are recommended.
- Pressure data [bar]: Overpressure to atmospheric pressure. Static: When closed, the valve is pressurised on one side with the maximum operating pressure.
- Information for control function B and I is available on request.

Diaphragm size	Actuator size Ø	Pilot pressure	Maximum static operating pressure for seal materials	
			EPDM, FKM	PTFE/EPDM, advanced PTFE/EPDM, laminate of GYLON® and EPDM
	[mm]	[bar]	[bar]	[bar]
8	50 (D)	3.7...10	10	10 1.)
15	50 (D)	5.0...10	10	–
	70 (M)	4.8...10	10	10
20	70 (M)	4.8...10	10	10
25	70 (M)	5.5...10	10	6
	90 (N)	5.0...10	10	10
40	90 (N)	5.5...10	7.5	6 2.)
	130 (P)	5.0...7	10	10
50	130 (P)	5.0...7	10	10
65	130 (P)	5.0...7	7.5	5
	225 (L)	2.7...7	10	10
80	225 (L)	5.4...7	10	10
100	225 (L)	5.6...7	10	10 3.)

1.) Variant is only available with reinforced spring pack
2.) Laminate of GYLON® and EPDM (ER diaphragm) is not available.
3.) The maximum operating pressure for advanced PTFE/EPDM (EU diaphragms) is 9 bar.

DTS 1000450600 EN Version: - Status: RL (released | freigegeben | valide) printed: 07.10.2026

valvesgo.com

valvesgo.com

7. Product accessories

Electrical position indicator

Control head

Type 8691 ▸ Actuator size Ø 70/90/130/225 mm

Type 8695 ▸ Actuator size Ø 50 mm

The control heads Type 8691 and Type 8695 are optimised for integrated mounting on process valves of the 21XX series. The valve position is detected without contact via an analogue sensor element. The sensor element automatically detects and stores the valve end positions during commissioning using the teach function. The integrated pilot valve controls single-acting or double-acting actuators. The valve switching status is indicated by coloured high-performance LEDs.

Features

- Status indication via coloured high-performance LEDs
- Wear-free inductive position sensor
- Pilot valve with manual override
- Teach function for automatic recognition of valve end positions
- Hygienic stainless steel design
- Easy-to-clean, chemically resistant housing according to IP65/67, 4X rating
- AS-Interface, IO-Link, Bürkert system bus (büS)

Customer benefits

- Simple and safe commissioning using the teach function
- Easy process monitoring and fault detection through visible coloured high-performance LEDs
- High degree of system availability due to increased actuator service life by means of spring chamber ventilation
- Minimal space requirement in plant piping for more flexibility in plant design

Pneumatic control unit/position feedback

Type 8690 ▸ Actuator size Ø 70/90/130/225 mm

Type 8697 ▸ Actuator size Ø 50 mm

The pneumatic control units Type 8690 and 8697 are optimised for integrated mounting on process valves of the 21XX series. Mechanical or inductive limit switches detect the valve position. The integrated pilot valve controls single-acting or double-acting (Type 8690) actuators.

Features

- Optical position indicator
- Mechanical or inductive proximity switches for end position detection
- Pilot valve with manual override
- Compact design
- Easy-to-clean, chemically resistant housing according to IP65/67, 4X rating
- Optionally intrinsically safe design according to ATEX/IECEx

Customer benefits

- Simple and safe commissioning using the teach function (Type 8697)
- Signal reliability due to the automatic adjustment of the limit switches
- Minimal space requirement in plant piping for more flexibility in plant design

DTS 1000450600 EN Version: - Status: RL (released | freigegeben | valide) printed: 07.10.2026

valvesgo.com

Process controller TopControl

Type 8693 ▸ Actuator size Ø 70/90/130/225 mm

The intelligent process controller Type 8693 is designed for integrated mounting on pneumatic actuators from the process control valve series Type 23xx/2103 and especially for the requirements of hygienic process conditions. Using the TUNE functions, the positioner and process controller can be initialised automatically. Easy operation and selection of additional software functions as well as parameterisation are carried out via the large graphic display and a touch keypad. Device configuration and parameterisation can also be conveniently carried out by the Bürkert Communicator software via a PC interface.

Features

- Contactless position sensor
- Universal control system for single and double acting actuators
- Highly dynamic actuating system without internal pilot air consumption in the balanced state
- Integrated diagnostic functions for valve monitoring
- Automatic initialisation of the positioner and process controller using the TUNE function
- Safeguarding in the event of failure of the electrical or pneumatic auxiliary power
- PROFIBUS DPV1, EtherNet/IP, PROFINET, Modbus TCP, Bürkert system bus (büS)
- Compact and robust hygienic stainless steel design

Customer benefits

- Quick and easy commissioning
- Intuitive and simple operation via a graphic display with backlight and touch keypad
- High system availability due to increased drive service life by means of spring chamber ventilation
- Guaranteed reliability and predictable maintenance through valve monitoring and diagnostics
- Easy maintenance and process monitoring

Positioner TopControl

Type 8692 ▸ Actuator size Ø 70/90/130/225 mm

The intelligent electropneumatic positioner Type 8692 is designed for integrated attachment to pneumatic actuators of the process control valve series Type 23xx/2103 and especially for the requirements of hygienic process conditions. The positioner can be initialised automatically using the TUNE function. Easy operation and the selection of the extensive additional software functions as well as parameterisation are carried out via the large graphic display and the touch keypad. The device configuration and parameterisation can also be conveniently carried out using the Bürkert Communicator software via a PC interface.

Features

- Contactless position sensor
- Universal positioning system for single and double-acting actuators in the balanced state
- Highly dynamic positioning system without internal pilot air consumption
- Integrated diagnostic functions for valve monitoring
- Automatic initialisation of the positioner by using the TUNE function
- Safeguard in the event of failure of the electrical or pneumatic auxiliary power
- PROFIBUS DPV1, EtherNet/IP, PROFINET, Modbus TCP, Bürkert system bus (büS)
- Compact and robust hygienic stainless steel design

Customer benefits

- Quick and easy commissioning
- Intuitive and simple operation via graphic display with backlight and touch keypad
- High system availability due to increased drive service life by means of spring chamber ventilation
- Guaranteed reliability and predictable maintenance through valve monitoring and diagnostics

DTS 1000450600 EN Version: - Status: RL (released | freigegeben | valide) printed: 07.10.2026

valvesgo.com

Positioner TopControl BASIC

Type 8694 ▸ Actuator size Ø 70/90/130/225 mm

The compact positioner Type 8694/8696 is designed for integrated attachment to pneumatic actuators of the Type 23xx/2103 process control valve series and especially for the requirements of hygienic process conditions. Operation and parameterisation are performed via push buttons and DIP switches. The device configuration and parameterisation can also be conveniently carried out using the Bürkert Communicator software via a PC interface.

Features

- Contactless position sensor
- Universal positioning system for single and double-acting actuators
- Ultra dynamic positioning system without internal pilot air consumption
- AS-Interface, IO-Link, Bürkert system bus (büS) (only 8694)
- Compact and robust hygienic stainless steel design

Type 8696 ▸ Actuator size Ø 50 mm

Customer benefits

- Simple and safe commissioning using the Teach function
- Minimum space requirement in the plant pipework for more flexibility in plant design
- High system availability due to increased drive service life by means of spring chamber ventilation

Process controller SideControl Remote

Type 8793 ▸ with remote sensor 8798 ▸ Actuator size Ø 70/90/130/225 mm

The intelligent digital positioner and process controller Type 8793 is designed for mounting on lift or swivel drives with standardisation in accordance with IEC 534 - 6 or VDI/VDE 3845 for demanding control tasks. The variant with remote position sensor Type 8798 is used to control Bürkert process control valves. It is operated via a graphic display with backlight. The initialisation of the positioner and process controller can be done automatically using the TUNE function. The type of controlled system is automatically recognised and the appropriate controller structure with the corresponding optimum parameter set is determined.

Features

- Universal control system for single and double acting actuators
- Integrated diagnostic functions for valve monitoring
- Automatic initialisation of the position and process controller using the TUNE function
- Ultra-dynamic actuating system without internal pilot air consumption in controlled state
- Illuminated graphic display with backlight and touch keypad
- PROFIBUS DPV1, EtherNet/IP, PROFINET, Modbus TCP, Bürkert system bus (büS)
- Compact and robust design
- Adaptation according to IEC 534 - 6 resp. VDI/VDE 3845 for linear and rotary actuators or as remote variant on Bürkert process valves

Customer benefits

- Quick and easy commissioning
- Intuitive and simple operation via graphic display with backlight and touch keypad
- Guaranteed reliability and scheduled maintenance thanks to valve monitoring and diagnostics
- Easy maintenance and process monitoring
- Long service life

DTS 1000450600 EN Version: - Status: RL (released | freigegeben | valide) printed: 07.10.2026

valvesgo.com

Positioner SideControl Remote

Positioner Type 8792 ▸ with remote sensor Type 8798 ▸ Actuator size Ø 70/90/130/225 mm

The intelligent digital positioner and process controller Type 8792 is designed for attachment to linear and rotary actuators with standardisation according to IEC 534 - 6 or VDI/VDE 3845 for demanding control tasks. The Type 8798 variant with remote position sensor is used to control Bürkert process control valves. It is operated via a graphic display with backlight. The initialisation of the positioner and process controller can be done automatically by using the TUNE function.

Features

- Illuminated graphic display with backlight and touch keypad
- Universal control system for single and double acting actuators
- Ultra-dynamic actuating system without internal pilot air consumption in controlled state
- Integrated diagnostic functions for valve monitoring
- PROFIBUS DPV1, EtherNet/IP, PROFINET, Modbus TCP, Bürkert system bus (büS)
- Compact and robust design
- Adaptation according to IEC 534 - 6 resp. VDI/VDE 3845 for linear and rotary actuators or as remote variant on Bürkert process valves

Customer benefits

- Quick and easy commissioning
- Intuitive and simple operation via a graphic display with backlight and touch keypad
- Guaranteed reliability and scheduled maintenance thanks to valve monitoring and diagnostics
- Long service life

Positioner SideControl BASIC Remote

Positioner Type 8791 ▸ with remote sensor Type 8798 ▸ Actuator size Ø 70/90/130/225 mm

The intelligent digital positioner and process controller Type 8791/8798 is designed for mounting on linear and rotary actuators with standardisation according to IEC 534 - 6 or VDI/VDE 3845 for demanding control tasks. The variant with remote position sensor Type 8798 is used to control Bürkert process control valves. It is operated via a graphic display with backlighting. The positioner and process controller can be initialised automatically using the TUNE functions.

Positioner IP20 Type 8791 ▸ with remote sensor Type 8798 ▸ Actuator size Ø 70/90/130/225 mm

Features

- Simple design
- Universal control system for single and double acting actuators
- Highly dynamic actuating system without internal pilot air consumption in the balanced state
- Adaptation according to IEC 534 - 6 resp. VDI/VDE 3845 for linear and rotary actuators or as remote variant on Bürkert process valves
- AS-Interface, IO-Link, Bürkert system bus (büS) (only for positioner Type 8791 BASIC Remote)

Customer benefits

- Simple commissioning
- Simple device for simple control tasks
- Low energy consumption

DTS 1000450600 EN Version: - Status: RL (released | freigegeben | valide) printed: 07.10.2026

valvesgo.com

8. Networking and combination with other Bürkert products

8.1. Possible combinations

For ELEMENT valve system Type 8802-TB with TopControl

Note:
The **continuous ELEMENT valve system Type 8802-TB** consists of a **diaphragm valve Type 2104** and a digital electropneumatic **positioner Type 8692** (for valve actuator size Ø 70/90/130/225 mm), a digital electropneumatic **process controller Type 8693** (for valve actuator size Ø 70/90/130/225 mm), a basic digital electropneumatic **positioner Type 8694** (for valve actuator size Ø 70/90/130/225 mm) or a digital electropneumatic **positioner Type 8696** (for valve actuator size Ø 50 mm).

You order two components and receive a completely assembled and tested valve.

Example:

	Process controller TopControl	Positioner TopControl		
Type 2104	**Type 8693** ▶ Digital electropneumatic process controller for the integrated mounting on process control valves	**Type 8692** ▶ Digital electropneumatic positioner for the integrated mounting on process control valves	**Type 8694** ▶ Digital electropneumatic positioner for the integrated mounting on process control valves	**Type 8696** ▶ Digital electropneumatic positioner for the integrated mounting on process control valves
	▼	▼	▼	▼
	Valve system ELEMENT			
	Valve system Type 8802-TB-J **Type 2104 + 8693** Actuator size Ø 70/90/130/225 mm	**Valve system Type 8802-TB-I** **Type 2104 + 8692** Actuator size Ø 70/90/130/225 mm	**Valve system Type 8802-TB-L** **Type 2104 + 8694** Actuator size Ø 70/90/130/225 mm	**Valve system Type 8802-TB-N** **Type 2104 + 8696** Actuator size Ø 50 mm

DTS 1000450600 EN Version: - Status: RL (released | freigegeben | valide) printed: 07.10.2026

valvesgo.com

For ELEMENT valve system Type 8802-TB with SideControl Remote

Note:
The **continuous ELEMENT valve system Type 8802-TB** with **SideControl** consists of a **diaphragm valve Type 2104** and a digital electro-pneumatic **SideControl process controller Type 8793** (for valve actuator size Ø 70/90/130/225 mm) or a digital electropneumatic **SideControl positioner Type 8792/8791** (for valve actuator size Ø 70/90/130/225 mm). The SideControls can only be used in combination with the position measuring system **Type 8798**.

You order two components and receive a completely assembled and tested valve.

Example:

	Process controller SideControl Remote	Positioner SideControl Remote	
Type 2104	**Type 8798 ▸ + Type 8793 ▸**	**Type 8798 ▸ + Type 8792 ▸**	**Type 8798 ▸ + Type 8791 ▸**
	Valve system ELEMENT		
	Valve system Type 8802-TB-Q **Type 2104 + 8793 + 8798** Actuator size Ø 70/90/130/225 mm	**Valve system Type 8802-TB-P** **Type 2104 + 8792 + 8798** Actuator size Ø 70/90/130/225 mm	**Valve system Type 8802-TB-O** **Type 2104 + 8791 + 8798** Actuator size Ø 70/90/130/225 mm

DTS 1000450600 EN Version: - Status: RL (released | freigegeben | valide) printed: 07.10.2026

valvesgo.com

For ELEMENT valve system Type 8801-TB with control head or pneumatic control unit/position feedback

Note:
A decentralised automated **valve system on/off ELEMENT Type 8801-TB** consists of a **diaphragm valve Type 2104** and a valve **control head Type 8691/8695** or a pneumatic **control unit Type 8690/8697**.

You order two components and receive a completely assembled and tested valve.

Example:

	Control head		Pneumatic Control unit	
Type 2104	**Type 8691** ▶ Control head for decentralised automation of ELEMENT process valves	**Type 8695** ▶ Control head for decentralised automation of ELEMENT process valves	**Type 8690** ▶ Pneumatic control for decentralised automation of ELEMENT process valves	**Type 8697** ▶ Pneumatic control for decentralised automation of ELEMENT process valves
	Valve system on/off ELEMENT		**Valve system on/off ELEMENT**	
	Valve system Type 8801-TB-H **Type 2104 + 8691** Actuator size Ø 70/90/130/225 mm	**Valve system Type 8801-TB-M** **Type 2104 + 8695** Actuator size Ø 50 mm	**Valve system Type 8801-TB-K** **Type 2104 + 8690** Actuator size Ø 70/90/130/225 mm	**Valve system Type 8801-TB-U** **Type 2104 + 8697** Actuator size Ø 50 mm

DTS 1000450600 EN Version: - Status: RL (released | freigegeben | valide) printed: 07.10.2026

valvesgo.com

9. Ordering information

9.1. Bürkert eShop

Bürkert eShop – Easy ordering and quick delivery

You want to find your desired Bürkert product or spare part quickly and order directly? Our online shop is available for you 24/7. Sign up and enjoy all the benefits.

Order online now

9.2. Bürkert product filter

Bürkert product filter – Get quickly to the right product

You want to select products comfortably based on your technical requirements?
Use the Bürkert product filter and find suitable articles for your application quickly and easily.

Try out our product filter

9.3. Bürkert Product Enquiry Form

Note:
Please see our Product Enquiry Form for a full explanation of our specification key.

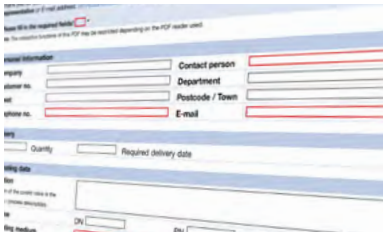

Bürkert Product Enquiry Form – Your enquiry quickly and compactly

Would you like to make a specific product enquiry based on your technical requirements? Use our Product Enquiry Form for this purpose. There you will find all the relevant information for your Bürkert contact. This will enable us to provide you with the best possible advice.

Fill out the form now

DTS 1000450600 EN Version: - Status: RL (released | freigegeben | valide) printed: 07.10.2026

valvesgo.com