bürkert
FLUID CONTROL SYSTEMS

Type 3281

2-way motor valve
2-Wege-Motorventil
Vanne motorisée 2 voies

valvesgo.com

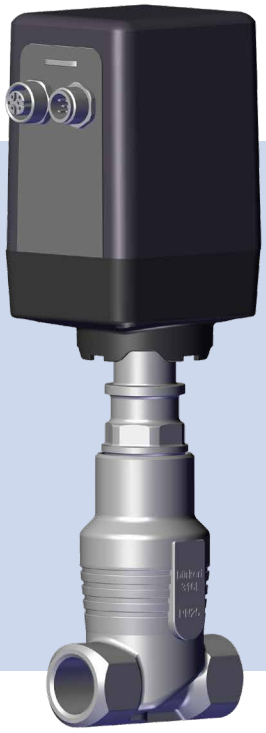

MAN 1000547946 EN Version: F Status: RL (released | freigegeben) printed: 09.10.2026

Operating Instructions

Bedienungsanleitung
Manuel d‘utilisation

valvesgo.com

MAN 1000547946 EN Version: F Status: RL (released | freigegeben) printed: 09.10.2026

valvesgo.com

We reserve the right to make technical changes without notice.
Technische Änderungen vorbehalten.
Sous réserve de modifications techniques.

© Bürkert Werke GmbH & Co. KG, 2022 - 2026

Operating Instructions 2607/05_EU-ML_00815152 / Original DE

Contents

1 OPERATING INSTRUCTIONS 6

1.1 Symbols 6

1.2 Definition of terms 6

2 INTENDED USE 7

3 BASIC SAFETY INSTRUCTIONS 8

4 GENERAL NOTES 9

4.1 Contact addresses 9

4.2 Warranty 9

4.3 Information on the Internet 9

5 PRODUCT DESCRIPTION 10

5.1 Intended area of application 10

5.2 Structure and function 10

5.2.1 Functions of the control electronics 10

5.3 Variants 11

5.3.1 Positioner 11

5.3.2 Process controller 12

6 TECHNICAL DATA 13

6.1 Standards and directives 13

6.2 Homologations 13

6.3 Operating conditions 13

6.4 Mechanical data 13

6.5 Type label 14

6.6 Electrical data 14

6.6.1 Derating 16

6.7 Fluidic data 16

7 INSTALLATION 17

7.1 Installing the device fluidically 17

7.2 Mounting the valve seat 17

MAN 1000547946 EN Version: F Status: RL (released | freigegeben) printed: 09.10.2026

valvesgo.com

7.3 Installing valve body 18
7.4 Installing devices with welded connection 19
7.4.1 Removing actuator from the valve body 19
7.4.2 Installing actuator on valve body 19
7.5 Turning actuator 20
7.6 Installing the device electrically 21
7.6.1 Pin assignment of the pins for positioner 22
7.6.2 Pin assignment of the pins for process controller 23
7.7 DIP switch settings (analog version only) 25
7.7.1 Opening the actuator cover 25
7.7.2 Setting the DIP switch 25
7.7.3 Closing the actuator cover 26
7.8 LED display 27
7.8.1 Display Elements Standard 27
7.8.2 Display Elements NAMUR NE 107 27
8 START-UP 29
8.1 Start-up with Bürkert Communicator 29
8.1.1 User interface 29
8.2 Connecting the device to the Bürkert Communicator 30
8.3 Functions of the positioner and process controller 30
8.3.1 Functions for positioners and process controllers 30
8.3.2 Functions for process controllers 31
8.4 Base settings 32
8.4.1 Positioner 32
8.4.2 Process controller 33
8.5 Settings for positioners and process controllers 34
8.5.1 INPUT/OUTPUT - selected standard signal 34
8.5.2 SIGNAL. SIM - Simulation of the set-point value 34
8.5.3 X.CONTROL - Parameterisation of the positioner, insensitivity range (dead band) of the positioner 34
8.5.4 X.TIME - limitation of control speed 35
8.5.5 DIR.CMD -Effective direction of the positioner set-point value 35
8.5.6 SAFEPOS - Entering the safety position 35
8.5.7 X.LIMIT - Limitation of the mechanical valve adjustment range 36

MAN 1000547946 EN Version: F Status: RL (released | freigegeben) printed: 09.10.2026

valvesgo.com

8.5.8 CUTOFF 36
8.5.9 CHARACT - Selection of the transfer characteristic between input signal (set-point position) and stroke (correction characteristic) 37
8.5.10 Calibrate Position Sensor (X.TUNE) - Zero Flow Point Setting 37
8.6 Process Controller Settings 38
8.6.1 PV.SCALE/SP.SCALE - Scaling the process controller 38
8.6.2 P.LIN - Linearisation of the process characteristic 38
8.6.3 P.TUNE - Self-optimisation of the process controller 38
8.6.4 P.CONTROL - Parameterisation of the process controller 38
8.6.5 P.SIM - Simulation of the process 39
8.7 Other settings 40
8.7.1 CAL INP 40
8.7.2 FACTORY RESET - Reset to factory settings 40
8.7.3 DIAGNOSTICS 40
8.7.4 CHANGEOVER of LED DISPLAY - Changeover of LED colours between standard and NAMUR NE 107 40
8.7.5 AUTO / MANU - Switching operating state AUTOMATIC / MANUAL 40
8.7.6 Access rights and password protection 40
8.7.7 Changing the operating state 41
8.8 Configuration management 41
9 MAINTENANCE 42
9.1 Maintenance work 42
9.2 Cleaning 42
9.3 Troubleshooting 42
10 ACCESSORIES 44
11 PACKAGING, TRANSPORT 45
12 STORAGE 45
13 ENVIRONMENTALLY FRIENDLY DISPOSAL 45

MAN 1000547946 EN Version: F Status: RL (released | freigegeben) printed: 09.10.2026

valvesgo.com

valvesgo.com

1 OPERATING INSTRUCTIONS

The operating instructions describe the entire life cycle of the device. Keep these instructions ready to hand at the operating site.

Important safety information.

- Read these instructions carefully.
- Above all, observe the safety instructions, intended use and operating conditions.
- Persons who work on the device must read and understand these instructions.

1.1 Symbols

DANGER

Warns of an immediate danger.

- Failure to observe these instructions will result in serious injuries or death.

WARNING

Warns of a potentially dangerous situation.

- Failure to observe these instructions may result in serious injuries or death.

CAUTION

Warns of a potential hazard.

- Failure to observe these instructions may result in moderate or minor injuries.

NOTE

Warns of damage to property.

- Failure to observe these instructions may result in damage to the device or the system.

Indicates important additional information, tips and recommendations.

Refers to information in these operating instructions or in other documentation.

- designates instructions for risk prevention.

→ Designates a procedure which you must carry out.

1.2 Definition of terms

Term	in these instructions, refers to
Device	Motor valve Type 3281
CANopen	A fieldbus based on CAN (Controller Area Network) which is used in automation technology to network devices
büS	A CANopen-based fieldbus with additional functionalities

MAN 1000547946 EN Version: F Status: RL (released | freigegeben) printed: 09.10.2026

valvesgo.com

2 INTENDED USE

The 2-way motor valve Type 3281 is designed to control the flow of liquid and gaseous media.

- Use the device only as intended. Non-intended use of the device may be dangerous to people, nearby equipment and the environment.
- Do not use the device outdoors and keep it away from heat sources that could cause the permissible temperature range to be exceeded.
- Protect the device from direct sunlight and humidity.
- To use the device, observe the permissible data, operating conditions and conditions of use. These specifications can be found in the contract documents, the operating instructions and on the Type label.
- Use the device only in conjunction with third-party devices and components recommended or approved by Bürkert.
- The device must only be used in perfect working order; always ensure proper storage, transportation, installation and operation.

valvesgo.com

MAN 1000547946 EN Version: F Status: RL (released | freigegeben) printed: 09.10.2026

3 BASIC SAFETY INSTRUCTIONS

These safety instructions do not take into account any unforeseen circumstances and events which occur during installation, operation and maintenance. The operator is responsible for observing the location-specific safety regulations, also with reference to personnel.

Risk of injury due to high pressure and escaping medium.

- Switch off the pressure before working on the system or device. Vent or empty the lines.

Risk of injury from electric shock.

- Before working on the system or device, switch off the power supply and secure to prevent reactivation.
- Observe any applicable accident prevention regulations and safety regulations for electrical devices.

Risk of burns or fire from hot device surfaces due to prolonged operation.

- Keep the device away from highly flammable substances and media.
- Only touch the device when wearing protective gloves.

General dangerous situations.

To prevent injuries, observe the following:

- Do not use Device key 3281 in areas where explosions are possible.
- Do not to subject the housing to mechanical stress.
- Do not make any internal or external changes to the device. Do not paint housing parts or screws.
- Avoid the use of the motor valve in an environment of strong magnetic fields.
- Secure the device against unintentional activation.
- Only trained technicians may carry out installation and maintenance work.
- Following an interruption in the power supply, ensure that the process is restarted in a controlled manner.
- Observe the general rules of technology.

NOTE

Electrostatically sensitive components and assemblies.

The device contains electronic components that are susceptible to the effects of electrostatic discharging (ESD). Components that come into contact with electrostatically charged persons or objects are at risk. In the worst-case scenario they will be destroyed immediately or will fail after start-up.

- Observe the requirements of EN 61340-5-1 for minimising or avoiding the possibility of damage caused by sudden electrostatic discharge.
- Do not touch electronic components when the supply voltage is connected.

MAN 1000547946 EN Version: F Status: RL (released | freigegeben) printed: 09.10.2026

valvesgo.com

4 GENERAL NOTES

4.1 Contact addresses

Germany

Bürkert Fluid Control Systems
Sales Centre
Christian-Bürkert-Str. 13–17
D-74653 Ingelfingen
Tel. +49 (0) 7940 - 10 91 111
Fax +49 (0) 7940 - 10 91 448
Email: info@burkert.com

International

The contact addresses can be found on the internet at: www.burkert.com

4.2 Warranty

A precondition for the warranty is that the device is used as intended in consideration of the specified operating conditions.

4.3 Information on the Internet

Operating instructions and data sheets for Type 3281 can be found on the Internet at: www.burkert.com

valvesgo.com

MAN 1000547946 EN Version: F Status: RL (released | freigegeben) printed: 09.10.2026

5 PRODUCT DESCRIPTION

5.1 Intended area of application

The motor valve Type 3281 is designed to control the flow of liquid and gaseous media. Only clean, liquid or gaseous media that do not attack the valve body and seal materials may be controlled.

NOTE

Damage to the valve body and seals due to unsuitable media.

Unsuitable media can cause damage to the valve body and seals.

- Use only suitable media.
- Check resistance in each individual case.

5.2 Structure and function

The valve spindle is driven by a stepper motor. The rotary rotational movement of the motor is converted into a linear movement by means of a threaded spindle. The valve spindle is rigidly connected to the threaded spindle. The valve spindle is connected to a control cone.

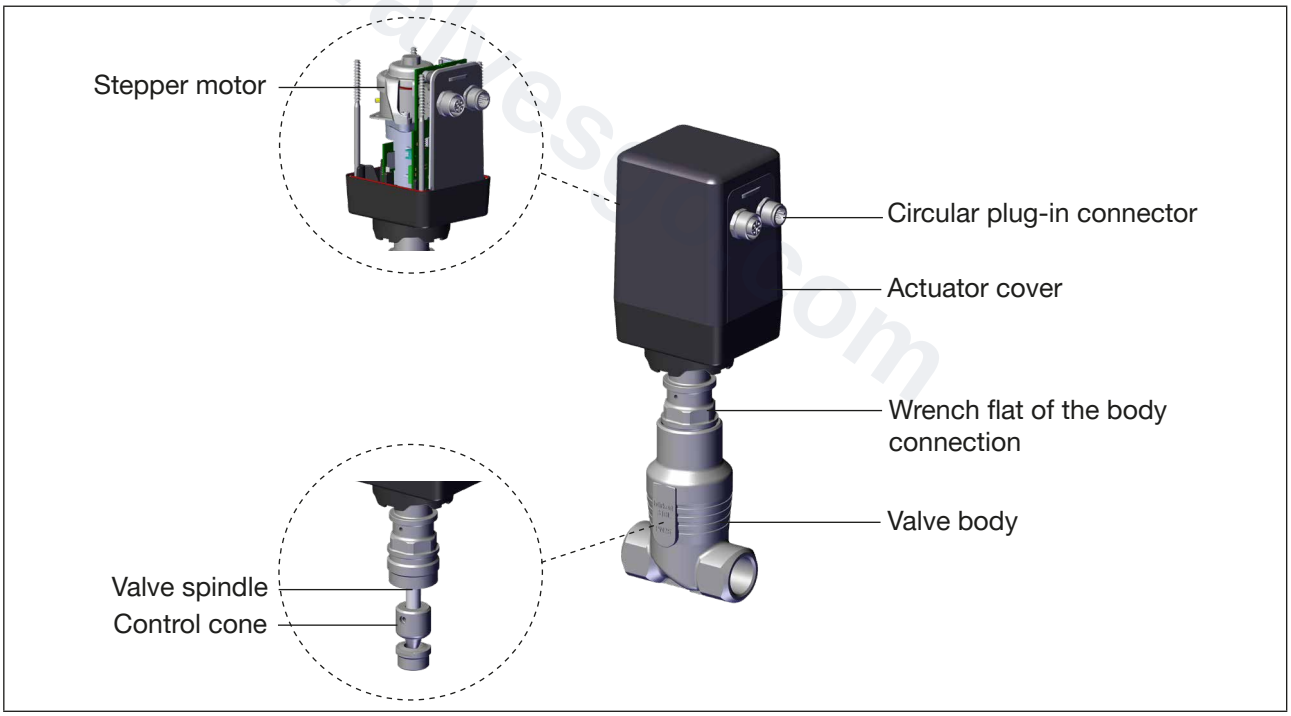

Fig. 1: Structure of the valve

The flow or switching of the valve is regulated by means of a stepper motor actuator, which is controlled by the integrated control electronics. No external motor control is required for step control.

5.2.1 Functions of the control electronics

- Control of the valve opening by processing the external set-point values.
- Output of the valve statuses via the LED display.
- Detection of the position after power failure.
  - In the event of a power failure, the current position of the valve is retained.

MAN 1000547946 EN Version: F Status: RL (released | freigegeben) printed: 09.10.2026

valvesgo.com

- When the voltage is applied again, the control electronics automatically detect the current position.

• Reduction of energy consumption.
- The stepper motor is only supplied with energy when it opens or closes the valve further. Owing to the internal holding torque, the stepper motor only moves when it is controlled. In the remaining time, only the control electronics need a basic voltage supply in order to adjust or move the stepper motor and thus the motor valve in the event of a change in the signal input.

5.3 Variants

Type	Seat size	Variants	Options
3281	4, 6, 8, 10, 15	with integrated positioner	analogue
			digital (fieldbus)
		with integrated process controller	analogue
			digital (fieldbus)

Table 1: Variants

The variants with integrated positioner or process controller are available in 2 options:
• Analogue: Set-point values are transmitted analogue via the standard signals,
• Digital: Set-point values are transmitted digitally via CANopen/büS.

The variants can be recognized by the plug configuration or on the Type label: C stands for positioner and D for process controller.

Both variants have special functions that can be set using the Bürkert Communicator.

5.3.1 Positioner

The positioner converts a set-point position into a valve position. The position of the actuator is regulated according to the set-point position. The position sensor records the current position *(POS)* of the electromotive valve. This actual position is compared by the positioner with the set-point value *(CMD)* specified as the standard signal. If there is a control difference (Xd1), a motor control signal is given to the actuator as the actuating variable. Z1 is a disturbance.

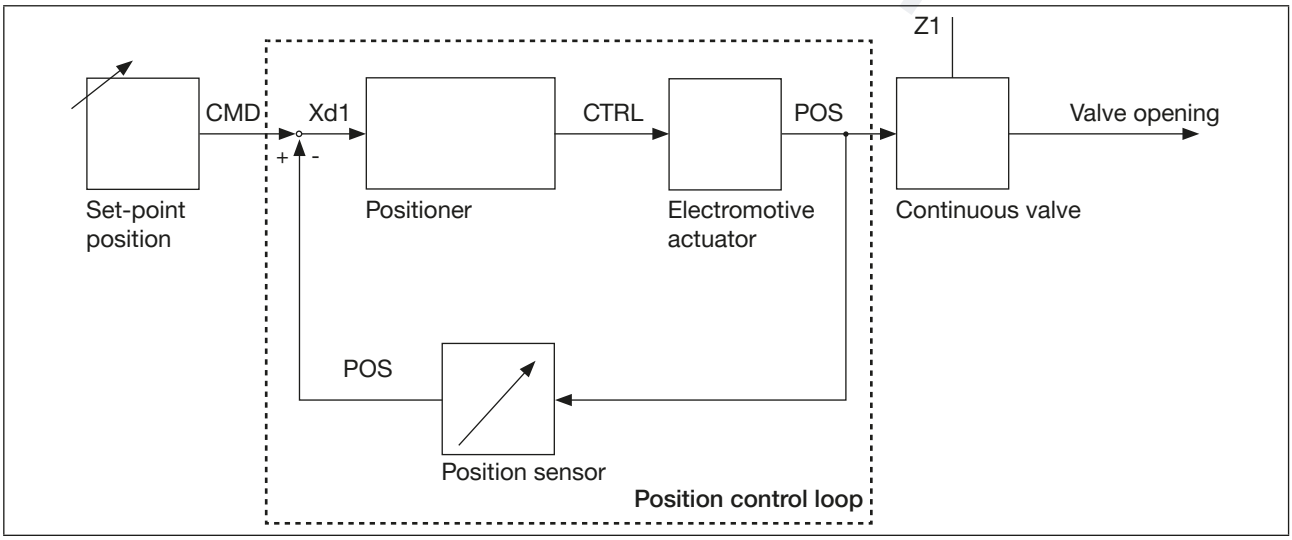

Fig. 2: Signal Flow Plan Positioner

The two end positions of the valve are signaled by status LEDs. The actual position recorded by the position sensor is output via the M12 circular plug-in connector. It is possible to communicate with the device digitally via CANopen or büS.

MAN 1000547946 EN Version: F Status: RL (released | freigegeben) printed: 09.10.2026

valvesgo.com

5.3.2 Process controller

The additionally implemented PID controller can, except for the position control, also be used to conduct a process control for purposes of cascade control.

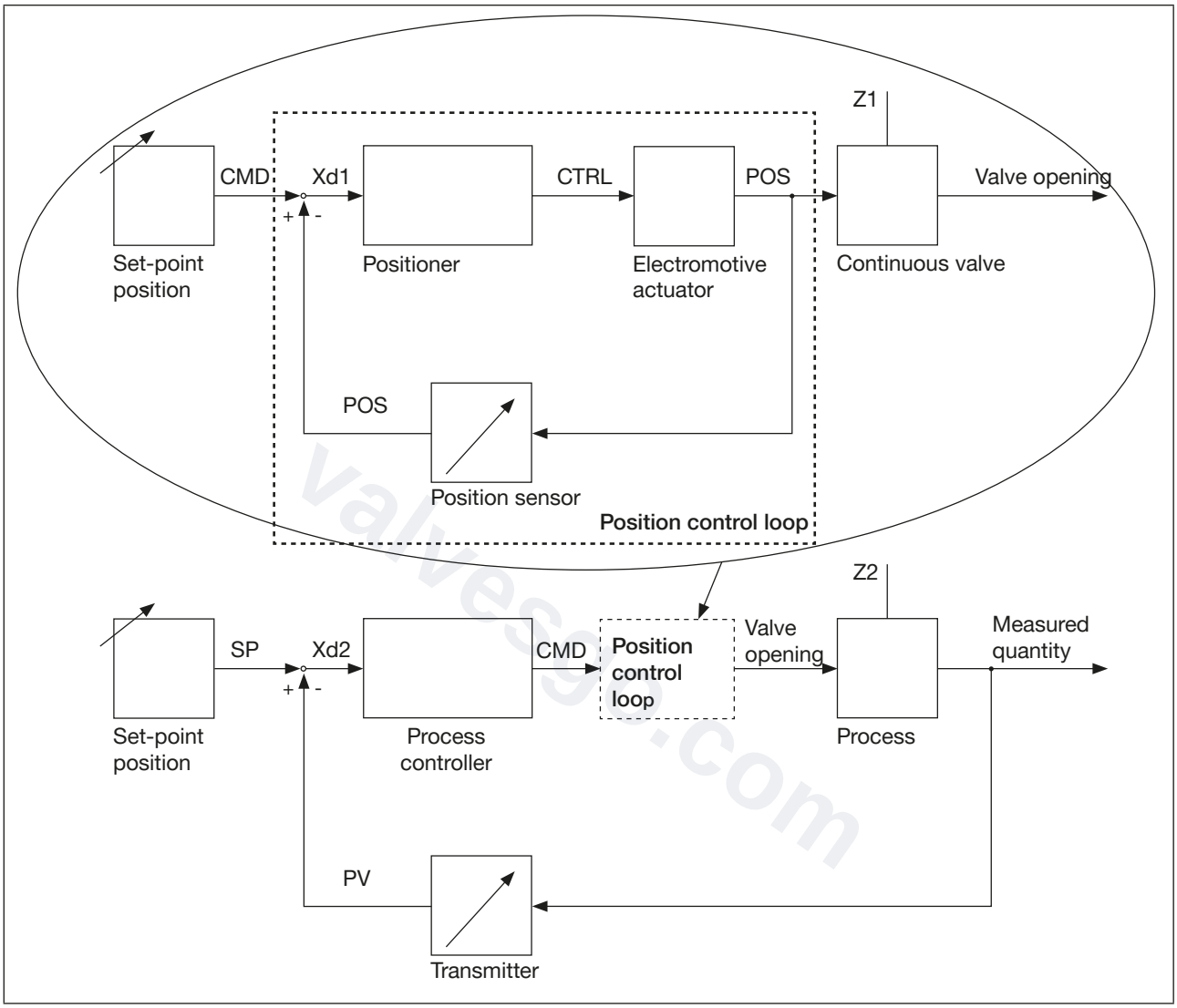

Fig. 3: Signal Flow Diagram Process Controller

The process controller is integrated into a control loop. The set-point position of the valve is derived from the process set-point value and the process actual value, with the control parameters (PID controller). The process set-point value can be specified by an external signal.

For process control, the position control mentioned above becomes an auxiliary control loop, which creates a cascade control. The process controller in the main control loop has a PID function. The process set-point value (SP) is specified as the set-point value and compared with the actual value (PV) of the measured variable being controlled. The position sensor records the current position (POS) of the electromotive linear actuator.

This actual position is compared by the positioner with the set-point value (CMD) specified by the process controller. If there is a control difference (Xd1), the actuating variable (CTRL) is used to change the actual position (POS) and thus the valve opening. Z2 is a disturbance.

MAN 1000547946 EN Version: F Status: RL (released | freigegeben) printed: 09.10.2026

6 TECHNICAL DATA

6.1 Standards and directives

The device complies with the valid EU harmonisation legislation. In addition, the device also complies with the requirements of the laws of the United Kingdom.
The harmonised standards that have been applied for the conformity assessment procedure are listed in the current version of the EU Declaration of Conformity/ UK Declaration of Conformity.

6.2 Homologations

powered by EDIP	Field device for integration into the EDIP platform via Bürkert system bus (büS)
	Food contact Materials in contact with medium conform to EC Regulation 1935/2004 (optional) Materials in contact with medium conform to FDA (optional)
	China food GB Standards of the People‘s Republic of China (valid for the variable code PL10) All wetted materials are compliant with the requirement of China food GB Standards according to the manufacturer‘s declaration

6.3 Operating conditions

Ambient temperature	–10...+60 °C (note derating curve, see chapter “6.6.1”)
Medium temperature	–20...+130 °C
Air humidity	< 95%, non-condensing
Media	non-aggressive, pure and non-corrosive liquid and gaseous media that do not attack valve bodies and seal materials. Check resistance in each individual case. In the case of dirty media, pre-connect a suitable dirt trap with a mesh size of ≤ 0.3 mm.

Circuit function

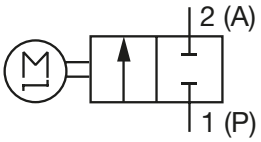	Direct-acting 2-way valve, motor-driven, currentless in position

6.4 Mechanical data

Materials		
	Actuator cover	Plastic parts black: PPS GF40, Plastic parts anthracite: PC GF10
	Valve body	Stainless steel VA
	Seal material	PTFE
	Other materials in the fluid sector	Stainless steel VA
Connections		G1/2, RC1/2, NPT1/2 and welded connection
Weight		~1.1 kg
Dimensions		see data sheet

MAN 1000547946 EN Version: F Status: RL (released | freigegeben) printed: 09.10.2026

valvesgo.com

6.5 Type label

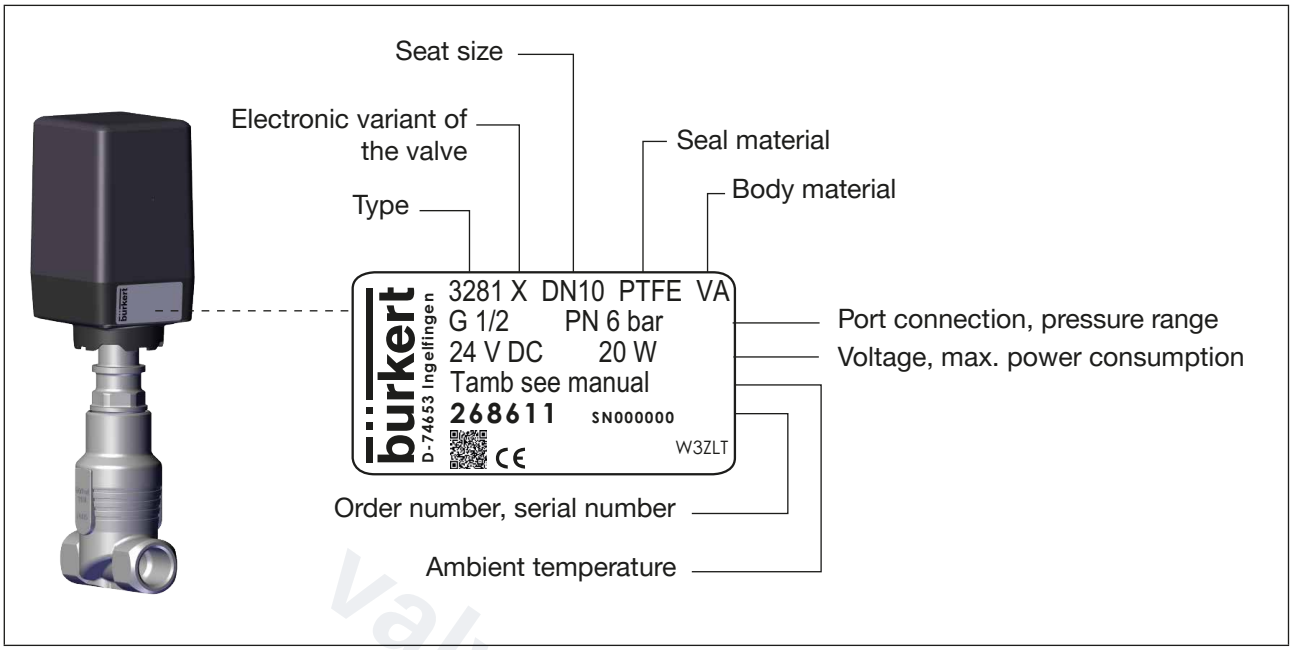

Fig. 4: Location and description of the type label (example)

6.6 Electrical data

Electrical data	Positioner		Process controller	
	Analog	Digital (fieldbus)	Analog	Digital (fieldbus)
Connections	Circular plug-in connector (M12 x 1, 8-pin)	Circular plug-in connector (M12 x 1, 5-pin)	Circular plug-in connectors (M12 x 1, 8-pin and M12 x 1, 5-pin)	Circular plug-in connectors (M12 x 1, 5-pin and M12 x 1, 5-pin)
Operating voltage	24 V DC ±10% - residual ripple < 10%		24 V DC ±10% - residual ripple < 10%	
Power consumption	max. 12 W short-term 20 W		max. 12 W short-term 20 W	
Standby power consumption	approx. 2 W		approx. 2 W	
Actuating time (0-100%)	approx. 2.5 s		approx. 2.5 s	
Analogue input (set-point value input)	0...20 mA, 4...20 mA, 0...5 V or 0...10 V[1], see chapter "8.5" or PWM-signal (800 Hz)	-	0...20 mA, 4...20 mA, 0...5 V or 0...10 V, see chapter "8.5" or PWM-signal (800 Hz)	-

MAN 1000547946 EN Version: F Status: RL (released | freigegeben) printed: 09.10.2026

Electrical data	Positioner		Process controller	
	Analog	Digital (fieldbus)	Analog	Digital (fieldbus)
Analogue input (actual value input)	-	-	0...20 mA, 4...20 mA, 0...5 V or 0...10 V, see chapter "8.2.1"	0...20 mA, 4...20 mA, 0...5 V, 0...10 V or frequency: Measuring range 5...2000 Hz Input resistance > 22 kΩ Input signal > 10 Vss signal form square wave
Input impedance for analogue input	60 Ω at 0...20 mA and 4...20 mA / Resolution 40 µA 22 kΩ at 0...5 V and 0...10 V / Resolution 20 mV	-	60 Ω at 0...20 mA and 4...20 mA / Resolution 40 µA 22 kΩ at 0...5 V and 0...10 V / Resolution 20 mV	-
Analogue output (actual value output)	0...20 mA, 4...20 mA, 0...5 V, 0...10 V (adjustable, see chapter "8.5")	-	0...20 mA, 4...20 mA, 0...5 V, 0...10 V (adjustable, see chapter "8.5")	-
Analogue output	max. Current for voltage output 10 mA max. Load for current output 560 Ω	-	max. Current for voltage output 10 mA max. Load for current output 560 Ω	-
Position sensor	Contactless, high-resolution and thus wear-free position sensor		Contactless, high-resolution and thus wear-free position sensor	
Parameterisation interface	büS or CANopen[2)]	-	büS or CANopen[2)]	-
Communication interface	-	CANopen/büS	-	CANopen/büS
Duty cycle	according to EN 60034-1: S3 50%, depending on the operating conditions. Observe the derating curve, see chapter "6.6.1"		according to EN 60034-1: S3 50%, depending on the operating conditions. Observe the derating curve, see chapter "6.6.1"	

1) *For an on/off function, the input signal is: 0 V (log. 0, valve closed) or 10...30 V (log. 1, valve open).*

2) *For the analogue variant: 3.3 V signal voltage, the safe communication decreases with increasing line length and transmission speed.*

MAN 1000547946 EN Version: F Status: RL (released | freigegeben) printed: 09.10.2026

valvesgo.com

6.6.1 Derating

The maximum duty cycle of the valve depends on the maximum ambient temperatures, the media temperature and the coil current of the stepper motor.

The duty cycle does not mean the duty cycle of the device but the duty cycle of the stepper motor. This is only switched on when the valve is to move. Frequent set-point value changes drastically increase the duty cycle of the motor.

From the derating curve it can be read which maximum duty cycle is permissible at which maximum ambient temperature. At lower medium temperatures, higher duty cycles can be achieved.

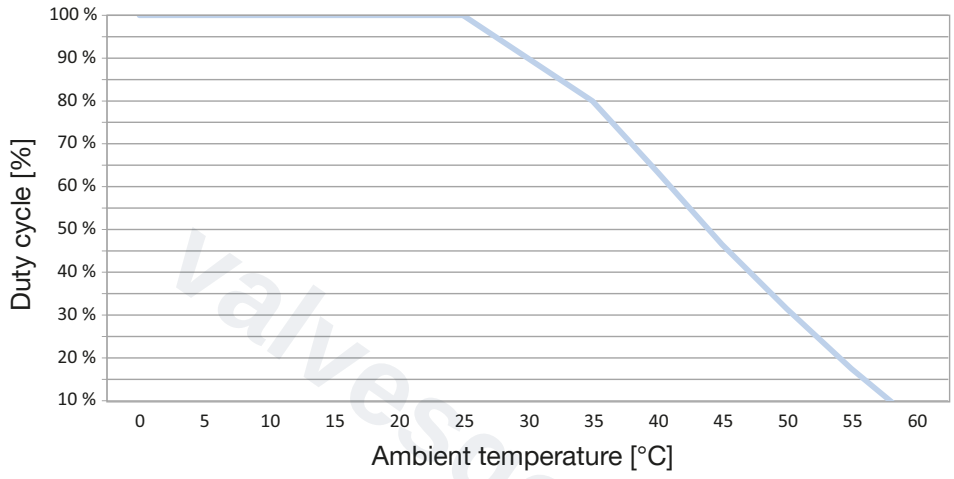

Fig. 5: Derating curve at max. media temperature for positioner and process controllers

6.7 Fluidic data

Seat size [mm]		Controller variant	$KV_{s\text{-value}}$ [m³/h] [3]	Pressure range [bar]
Globe	4	Control	0.57	0...16
	6	Control	1.25	0...16
	8	Control	1.8	0...12
	10	Control	2.25	0...7
	15	On/off	4.45	0...3.5
Angle-seat	15	Control	3.6	0...3
	15	On/off	4.55	0...3.5

[3] *The KV_s value is a flow value for water, measurement at +20 °C and 1 bar pressure difference above the fully open valve.*

MAN 1000547946 EN Version: F Status: RL (released | freigegeben) printed: 09.10.2026

7 INSTALLATION

DANGER

Risk of injury due to high pressure in the system or device.

- Before working on the system or device, switch off the pressure and deaerate lines.

Risk of injury from electric shock.

- Before working on the system or device, switch off the power supply and secure to prevent reactivation.
- Observe any applicable accident prevention regulations and safety regulations for electrical devices.

WARNING

Risk of injury due to improper installation.

- Installation may only be performed by trained technical personnel with suitable tools.
- Secure the system against unintentional activation.
- Following installation, ensure a controlled restart.

valvesgo.com

7.1 Installing the device fluidically

Installation position: arbitrary, preferably actuator at the top and with vertical installation position actuator cover upwards.

→ Clean pipelines and flange connections.

→ Install a dirt trap upstream of the valve inlet (≤ 0.3 mm).

NOTE

Caution: risk of breakage.

- Do not use the plastic actuator cover as a lever arm.

→ Hold the device on the housing using an appropriate tool (e.g. open-end wrench) and screw into the pipeline.

→ Note the flow direction.
The digits on the valve body indicate the direction of flow (flow direction always under valve seat 2 → 1).

7.2 Mounting the valve seat

Valve seat set consists of valve seat and graphite seal.

WARNING

Risk of injury from improper installation.

- Only mount the valve seat with a special installation tool.
- Observe the tightening torque.

MAN 1000547946 EN Version: F Status: RL (released | freigegeben) printed: 09.10.2026

When mounting the valve seat, the actuator must be removed. The work steps required are described in chapter "7.4.1".

→ Screw suitable tool insert into the assembly tool.

The suitable assembly tool (order number 625604) is not included in the valve set and must be ordered separately.

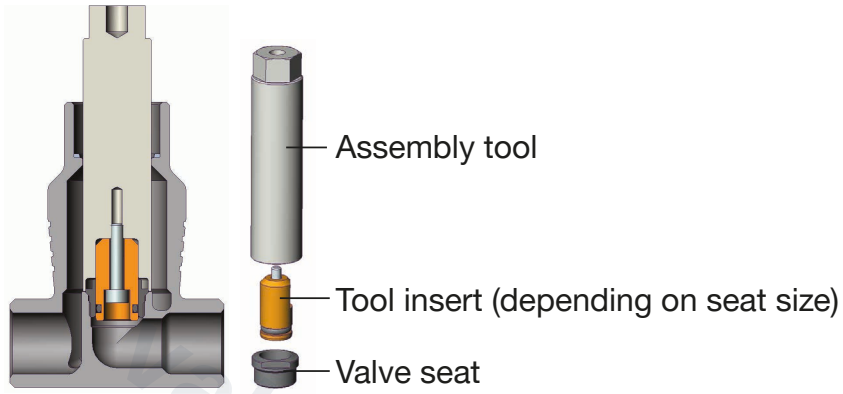

Fig. 6: Mounting the valve seat

DANGER

Danger due to lubricant.

Lubricant may contaminate the medium. There is a risk of explosion in oxygen applications.

▸ For specific applications, e.g. oxygen or analysis applications, use approved lubricants only.

→ Apply lubricant to the valve seat thread (e.g. Klüberpaste UH1 96-402 from Klüber).

→ Screw the attached valve seat into the thread of the valve body manually using the assembly tool.

→ Tighten the valve seat using a torque wrench. Observe the tightening torques in the following table.

Tightening torques for valve seat assembly:

Valve seat size	Tightening torques for coated seats [Nm]
4...10	20 ±3

→ Screw the actuator to the valve body. The work steps required are described in chapter "7.4.2".

7.3 Installing valve body

→ Connect valve body to pipeline.

→ Devices with welded connection: Weld the valve body into the pipeline. To do this, observe chapter on Installing devices with welded connection.

MAN 1000547946 EN Version: F Status: RL (released | freigegeben) printed: 09.10.2026

valvesgo.com

7.4 Installing devices with welded connection

NOTE

Damage to the actuator when welding the valve body into the pipeline.

▸ Before welding into the pipeline, remove the actuator.

7.4.1 Removing actuator from the valve body

NOTE

Damage to the valve seat seal or seat contour.

▸ When removing the actuator, the valve must be in the open position.

→ Connect the valve to the Bürkert Communicator and open the valve 100% in the MANUAL operating state.

→ Place a suitable open-end wrench on the wrench flat of the body connection.

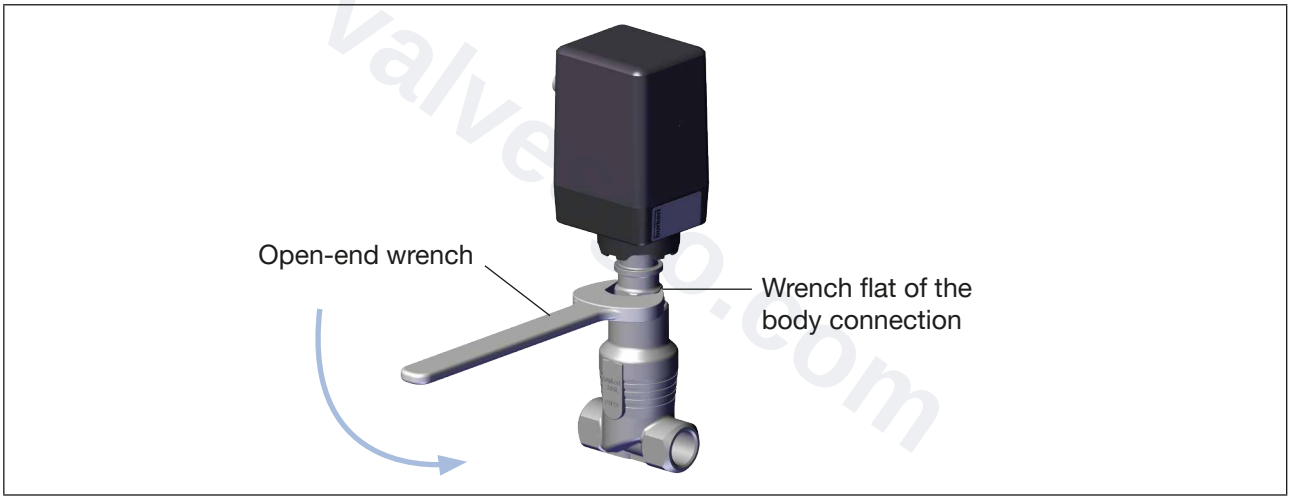

Fig. 7: Unscrewing the actuator

→ Unscrew actuator from the valve body.

7.4.2 Installing actuator on valve body

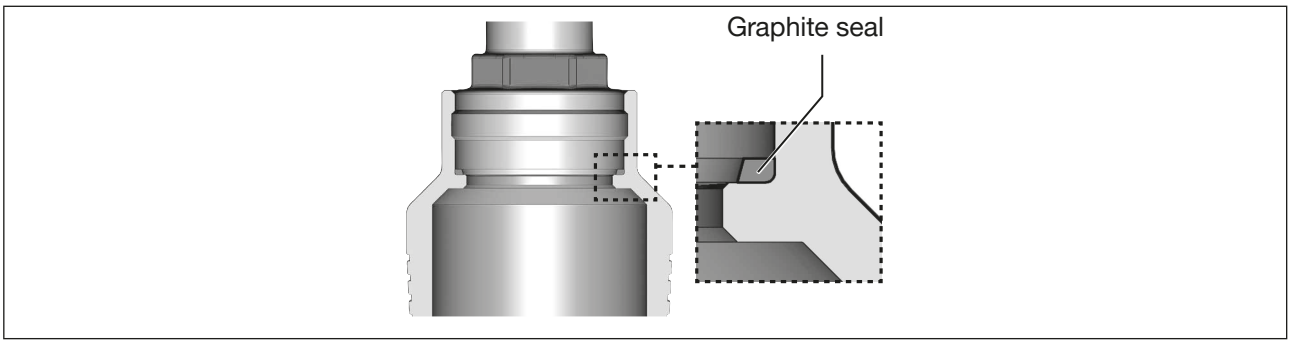

Fig. 8: Seal position

→ Check the seal for damage and replace it if necessary.

MAN 1000547946 EN Version: F Status: RL (released | freigegeben) printed: 09.10.2026

valvesgo.com

DANGER

Danger due to lubricant.

Lubricant may contaminate the medium. There is a risk of explosion in oxygen applications.

- For specific applications use only approved lubricants (e.g. for oxygen applications or analysis applications).

→ Before re-installation, grease the thread of the body connection (e.g. with Klüberpaste UH1 96-402 from Klüber).

NOTE

Damage to the valve seat seal or seat contour.

- When installing the actuator, the valve must be in the open position.

→ Screw actuator into the valve body. Observe the tightening torque of 45±3 Nm.

7.5 Turning actuator

The position of the ports can be seamlessly aligned by turning the actuator 360°.

NOTE

Damage to the valve seat seal or seat contour.

- When turning the actuator, the valve must be in the open position.

→ Clamp valve body in a holding device (only for valves which have not yet been installed).

→ Move the actuator into the required position by turning it clockwise (seen from above).

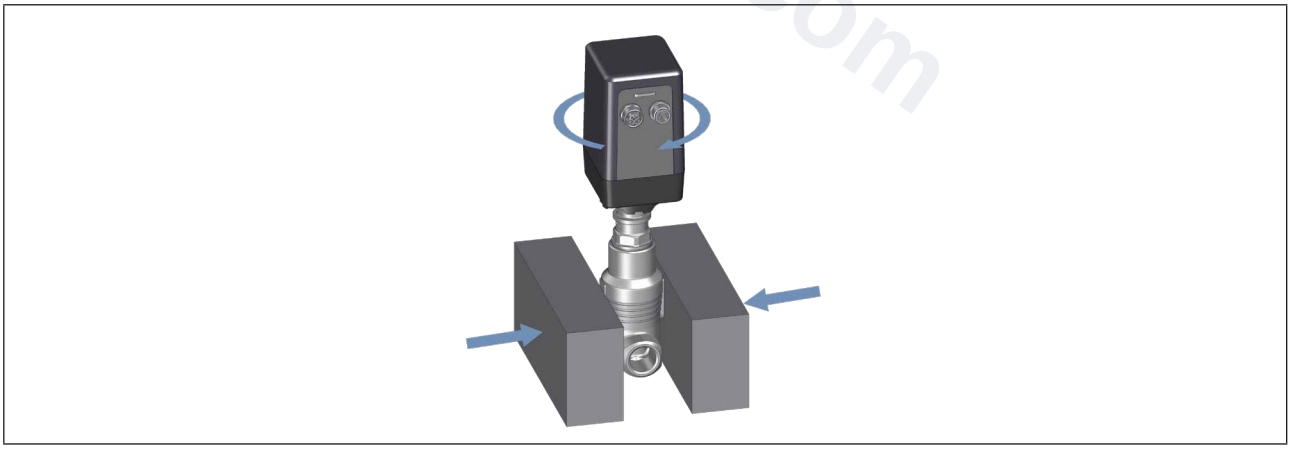

Fig. 9: Rotating the actuator

DANGER

Risk of injury due to high pressure and escaping medium.

If the direction of rotation is incorrect, the body connection can detach.

- Rotate the actuator only in the specified direction of rotation.

MAN 1000547946 EN Version: F Status: RL (released | freigegeben) printed: 09.10.2026

7.6 Installing the device electrically

All electrical inputs and outputs of the device are **not** galvanically isolated to the supply voltage.

DANGER

Risk of injury from electric shock.

- Before working on the system or device, switch off the power supply and secure to prevent reactivation.
- Observe any applicable accident prevention regulations and safety regulations for electrical devices.

NOTE

Damage to the motor valve due to incorrect supply voltage.

- Supply voltage must correspond to the voltage indicated on the type label.
- If the earth is not connected, this represents an infringement of the legal regulations of EMC.

→ Connect the motor valve according to the table.
After applying the operating voltage, the motor valve is ready for operation.

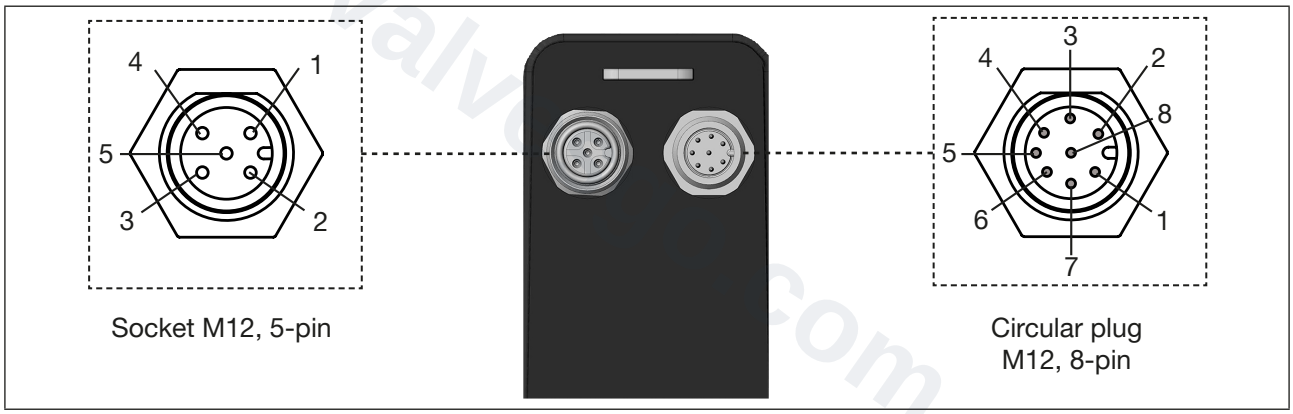

Fig. 10: Name of the circular plug-in connector, analogue variant

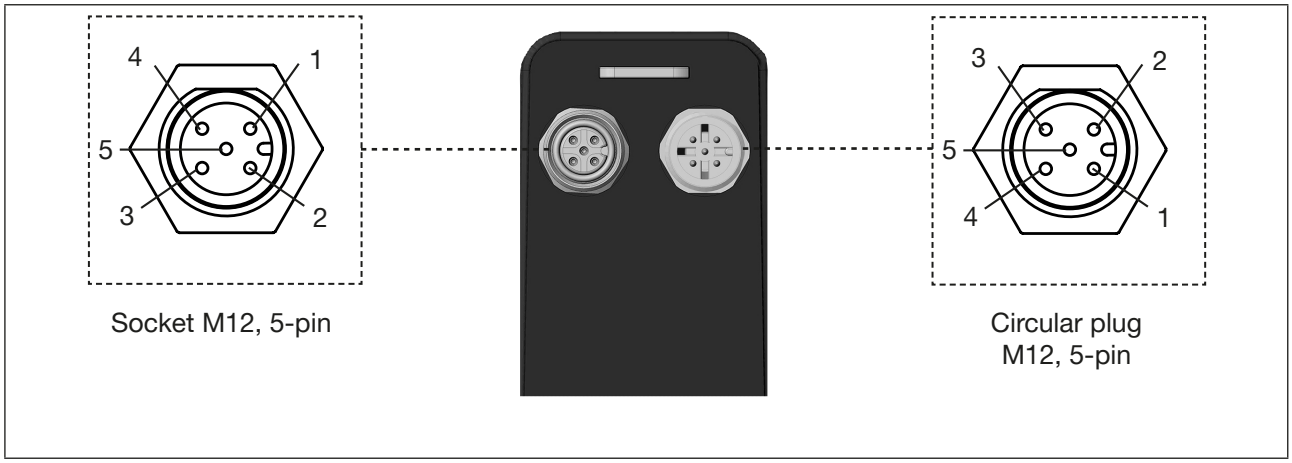

Fig. 11: Name of the circular plug-in connector, digital variant

MAN 1000547946 EN Version: F Status: RL (released | freigegeben) printed: 09.10.2026

valvesgo.com

The threaded sleeve of the M12 circular plug is connected to the actuator cover. The actuator cover must be connected to a suitable earthing connection.

NOTE

To ensure electromagnetic compatibility (EMC), make sure that the cable is as short as possible and the cross-section is as large as possible.

7.6.1 Pin assignment of the pins for positioner

7.6.1.1 Analogue variant, circular plug M12, 8-pin

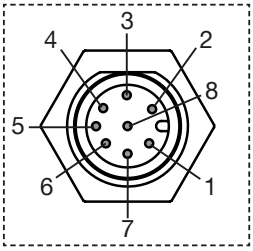

Pin	Wire colour*	Pin assignment	External circuit
1	white	Supply +	24 V DC ±10%, max. Residual ripple 10%
2	brown	Supply GND	24 V DC GND
3	green	CAN low	CAN low**
4	yellow	CAN high	CAN high**
5	grey	CAN GND	CAN GND**
6	pink	Set-point value input +	0...20 mA / 4...20 mA / 0...5 V / 0...10 V***, non-galvanically isolated, PWM-signal (800 Hz)
7	blue	Actual value output	0....20 mA / 4...20 mA / 0...5 V / 0...10 V, non-galvanically isolated
8	red	Signal GND	Signal GND
Housing		Shielding	-

** The specified wire colours refer to the connection cable, which is available as an accessory with order no. 919061*

*** 3.3 V signal voltage, the safe communication decreases with increasing line length and transmission speed*

**** For an on/off function, the input signal is: 0 V (log. 0, valve closed) or 10...30 V (log. 1, valve open)*

7.6.1.2 Digital variant, circular plug M12, 5-pin

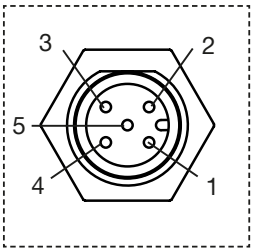

Pin	Wire colour*	Pin assignment	External circuit
1		Shielding	
2	red	Supply +	24 V DC ±10%, max. Residual ripple 10%
3	black	GND	GND
4	white	CAN high	CAN high
5	blue	CAN low	CAN low

** The specified wire colours relate to the büS cable, which is available as an accessory*

MAN 1000547946 EN Version: F Status: RL (released | freigegeben) printed: 09.10.2026

valvesgo.com

7.6.2 Pin assignment of the pins for process controller

7.6.2.1 Analogue variant, circular plug M12, 8-pin

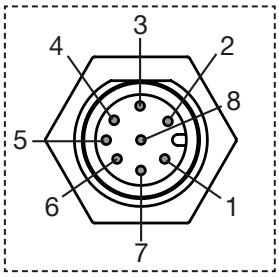

Pin	Wire colour*	Pin assignment	External circuit
1	white	Supply +	24 V DC ±10%, max. Residual ripple 10%
2	brown	Supply GND	24 V DC GND
3	green	CAN low	CAN low**
4	yellow	CAN high	CAN high**
5	grey	CAN GND	CAN GND**
6	pink	Set-point value input +	0...20 mA / 4...20 mA / 0...5 V / 0...10 V, non-galvanically isolated, PWM-signal (800 Hz)
7	blue	Actual value output	0....20 mA / 4...20 mA / 0...5 V / 0...10 V, non-galvanically isolated
8	red	Signal GND	Signal GND
Housing		Shielding	-

** The specified wire colours refer to the connection cable, which is available as an accessory with order no. 919061*

*** 3.3 V signal voltage, the safe communication decreases with increasing line length and transmission speed*

7.6.2.2 Analogue variant, socket M12, 5-pin

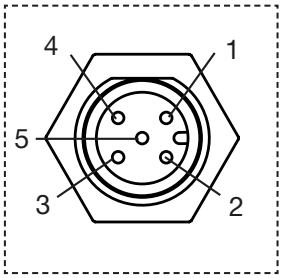

Pin	Wire colour*	Pin assignment	External circuit
1	brown	Sensor supply +	24 V DC ±10%, max. Residual ripple 10%
2	white	Actual value input sensor +	0...20 mA / 4...20 mA / 0...5 V / 0...10 V
3	blue	GND	GND
4	black	GND	GND (bridge according to GND pin 3)
5	grey	Not used	Not used
Housing		Shielding	-

** The specified wire colours refer to the connection cable, which is available as an accessory with order no. 559177*

MAN 1000547946 EN Version: F Status: RL (released | freigegeben) printed: 09.10.2026

valvesgo.com

7.6.2.3 Digital variant, circular plug M12, 5-pin

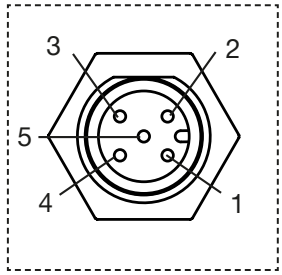

Pin	Wire colour*	Pin assignment	External circuit
1		Shielding	
2	red	Supply +	24 V DC ±10%, max. Residual ripple 10%
3	black	GND	GND
4	white	CAN high	CAN high
5	blue	CAN low	CAN low

* *The specified wire colours relate to the büS cable, which is available as an accessory*

7.6.2.4 Digital variant, socket M12, 5-pin

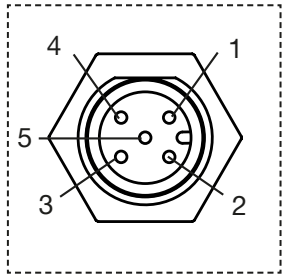

Pin	Wire colour*	Pin assignment	External circuit
1	brown	Sensor supply +	24 V DC ±10%, max. Residual ripple 10%
2	white	Actual value input sensor +**	0...20 mA / 4...20 mA / 0...5 V / 0...10 V / Frequency: 5-2000 Hz
3	blue	GND	GND
4	black	GND	GND (bridge according to GND pin 3)
5	grey	Not used	Not used
Housing		Shielding	-

* *The specified wire colours refer to the connection cable, which is available as an accessory with order no. 559177*

** *A PNP sensor must be used*

valvesgo.com

MAN 1000547946 EN Version: F Status: RL (released | freigegeben) printed: 09.10.2026

7.7 DIP switch settings (analog version only)

DANGER!

Risk of injury due to electrical shock.

- Before opening the actuator cover, switch off and isolate the power supply to prevent reactivation of the device.
- Observe applicable accident prevention and safety regulations for electrical equipment.

Although the factory settings are ideal for most applications, the settings can be adjusted with DIP switches. The DIP switches can be set to “ON” or “OFF” position depending on the factory order code.

The DIP switches are accessible on the electronic PCB by opening the actuator cover.

7.7.1 Opening the actuator cover

→ Disconnect the power supply from the device.

→ Carefully loosen the 4 screws on the lower side of the actuator housing, using a suitable tool. Do not unscrew the screws completely, as they are designed not to fall out.

NOTE!

The connection plate is only plugged in and may fall down when the actuator cover is removed. When removing the cover, hold the connection plate on the plug so that the connection plate remains on the actuator housing and is not removed together with the cover.

→ Secure actuator cover and connection plate with control electronics against falling down and remove the actuator cover.

7.7.2 Setting the DIP switch

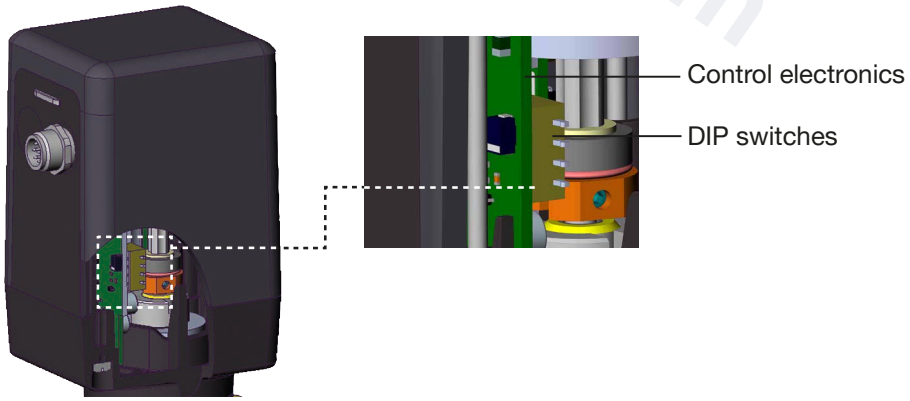

Fig. 12: Location of the DIP switch, Type 3281

→ DIP switch, set to “ON” or “OFF” depending on required function. To do this, carefully actuate the particular DIP switch using a suitable tool.

MAN 1000547946 EN Version: F Status: RL (released | freigegeben) printed: 09.10.2026

valvesgo.com

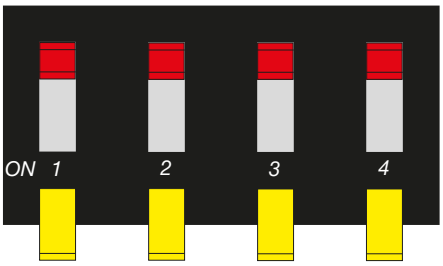

Fig. 13: DIP switches

Description of the function

DIP switches	Position	Function for the positioner and process controller version (applies to analog version only)
1	OFF	no function
	ON	no function
2	OFF	no function
	ON	no function
3	OFF	büS
	ON	CANopen
4	OFF	no function
	ON	no function

The change in function does not become effective until the supply voltage is applied again.

7.7.3 Closing the actuator cover

NOTE!

Damage or malfunction due to ingress of dirt and moisture!

- To guarantee protection class IP, ensure that the actuator housing has been installed correctly.

⚠ Do not clamp any loose cables!

→ Carefully attach actuator cover.

→ Manually insert 4 screws into the designated holes on the lower side of the actuator housing and turn them onto the first thread.

→ Tighten screws (tightening torque: 2 Nm).

MAN 1000547946 EN Version: F Status: RL (released | freigegeben) printed: 09.10.2026

valvesgo.com

7.8 LED display

The LED colours can be switched between standard and in line with NAMUR NE 107, using the Bürkert Communicator software.

7.8.1 Display Elements Standard

LED colour	Status	Display
white	permanently on	Normal operation
yellow	permanently on	valve not fully open
	flashing colour alternating with the colours of the valve position	Out of specification: The environment conditions or process conditions for the device are not within the specified range. Internal device diagnostics indicate problems within the device or with the process properties
green	permanently on	Valve closed
red	flashing colour alternating with the colours of the valve position	Error see chapter “Valve seat set consists of valve seat and graphite seal.” on page 17
white, green or red	flashing	Use to identify a device in the büS network. “Flashing” status starts when selecting the device in the Burkert Communicator software
orange	flashing colour alternating with the colours of the valve position	Function control: Work is being carried out on the device, which means that closed-loop control mode is temporarily not possible
blue	flashing, color alternates with the colors of the valve position	The configuration is not correctly managed by a provider (see Central configuration management of Bürkert devices)
no colour or LED off	-	Valve without power supply

7.8.2 Display Elements NAMUR NE 107

LED colour	Colour code	Status	Description	Meaning
green	1	perma-nently on	Diagnostics active	Device is in error-free operation. Status changes are highlighted in colour. Messages are sent via any fieldbus that may be connected.
red	5	perma-nently on	Failure, error or fault	Due to a malfunction in the device or its peripherals, closed-loop control mode is not possible
green or red	1 or 5	flashing		Use to identify a device in the büS network. “Flashing” status starts when selecting the device in the Burkert Communicator software

MAN 1000547946 EN Version: F Status: RL (released | freigegeben) printed: 09.10.2026

valvesgo.com

orange	4	perma-nently on	Function check	Work is being carried out on the device, which means that closed-loop control mode is temporarily not possible
yellow	3	perma-nently on	Out of specification	The environment conditions or process conditions for the device are not within the specified range. Internal device diagnostics indicate problems within the device or with the process properties
blue		flashing		The configuration is not correctly managed by a pro-vider (see Central configuration management of Bürkert devices)
no colour or LED off	-	-	-	Valve without power supply

valvesgo.com

MAN 1000547946 EN Version: F Status: RL (released | freigegeben) printed: 09.10.2026

8 START-UP

WARNING

Risk of injury from improper operation.

- The operating personnel must know and understand the contents of the operating instructions.
- Only adequately trained personnel may operate the system and the device.
- Perform fluidic and electrical installation before start-up.

8.1 Start-up with Bürkert Communicator

The Bürkert Communicator software can be downloaded free of charge from the Bürkert website. In addition to the software, the USB-büS-interface, available as an accessory, is required.

This chapter describes the basic use of the Bürkert Communicator. Detailed information can be found at: www.burkert.com → 8920 → Downloads "Operating instructions".

8.1.1 User interface

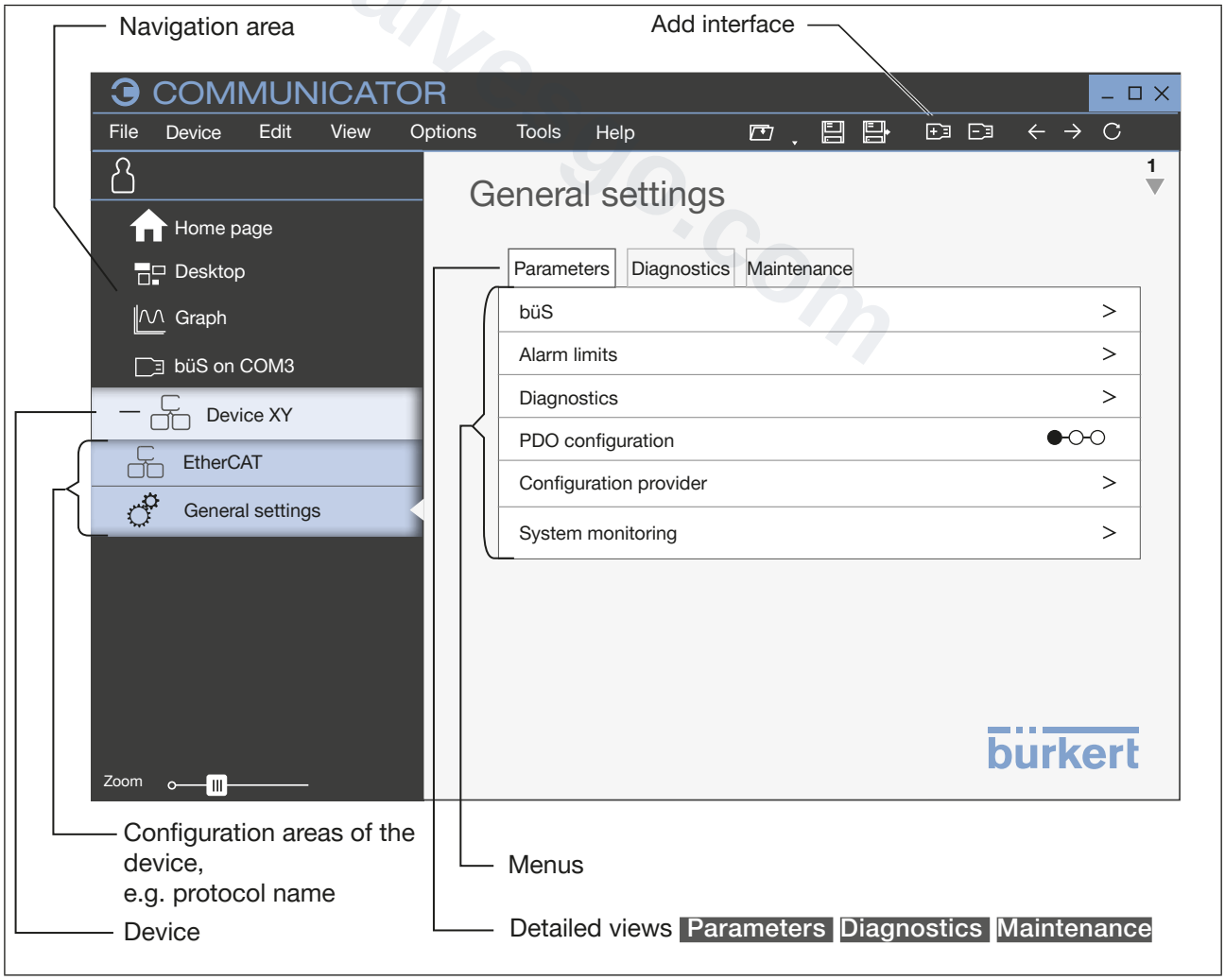

Fig. 14: Explanation of the terms in Bürkert Communicator

MAN 1000547946 EN Version: F Status: RL (released | freigegeben) printed: 09.10.2026

valvesgo.com

8.2 Connecting the device to the Bürkert Communicator

The Bürkert Communicator can be connected to the device via a büS network or with the büS interface set.

→ Install the Bürkert Communicator on the PC.

→ Use the USB-büS-interface to establish the connection between the device and the PC.
Not required for the devices in a büS network.

→ Start the Bürkert Communicator.

→ In the menu bar click the icon for Add interface.

→ Select büS interface set or büS via network.

→ Complete.

✔ The device is connected to Bürkert Communicator and is displayed in the navigation area.

8.3 Functions of the positioner and process controller

The device has various functions that can be changed via the Communicator software.

8.3.1 Functions for positioners and process controllers

Function	Description
Zero point shutdown	The valve has a zero point shutdown, which guarantees the sealing of the valve for input signals below a set threshold of the input signal. The valve is closed at values below this threshold
Interruption of the power supply	If the power supply is interrupted, the valve remains in the respective position. When the voltage is applied again, the control electronics automatically detect the current valve position
Correction line for adjusting the operating characteristic	With this auxiliary function, you select a transfer characteristic with regard to the set-point value (set-point position, *CMD)*and valve stroke*(POS)* for correcting the flow or operating characteristic
Insensitivity range	The positioner only responds from a control difference to be defined
Effective direction	Reversal of the effective direction of the set-point value
Safety position	Definition of the safety position at set-point value input < 4 mA
Valve setting speed	Input of the opening and closing time
Limitation of the mechanical valve control range	The physical control range is limited to defined areas
Simulation	Simulation of set-point values for testing device functions
Analogue input (set-point value input) only for analogue variant	The standard signals are 4...20 mA; 0...20 mA; 0...5 V; 0...10 V adjustable
Analogue output (actual value output) only with analogue variant	The standard signals are 4...20 mA; 0...20 mA; 0...5 V; 0...10 V adjustable
User Calibration	Changing the factory calibration of the signal input
Communication interface	With the digital variant, the device can receive communication via büS/CANopen (e.g. set-point values/actual values)

MAN 1000547946 EN Version: F Status: RL (released | freigegeben) printed: 09.10.2026

valvesgo.com

8.3.2 Functions for process controllers

Function	Description
Physical scaling of the measured quantity	Function for scaling process actual value and process set-point value
Process Controller Optimisation	Function to optimise the process controller parameters
Process Characteristic Linearisation	Function for linearisation of process characteristics
Parameterisation of the PID process controller	Setting of gain factor (P part), reset time (I part), derivative time (D part), insensitivity range (dead band), filtering of the process actual value input
Simulation of process values	Simulation of actual values for testing device functions
Analogue input (actual value input)	The standard signals are 4...20 mA; 0...20 mA; 0...5 V; 0...10 V adjustable. With the digital variant, the actual value input can process frequency signals in addition to the standard signals

valvesgo.com

MAN 1000547946 EN Version: F Status: RL (released | freigegeben) printed: 09.10.2026

8.4 Base settings

The Bürkert Communicator software enables communication with the Type 3281.

Operating instructions for Bürkert Communicator can be found under www.burkert.com

A commissioning assistant that provides step-by-step guidance through the base settings is available for the Bürkert Communicator:
Configuration area → positioner → commissioning assistant.

Before delivery, important base settings have already been input at the factory. The commissioning assistant contains functions that are shown in the following tables.

8.4.1 Positioner

Base settings		Factory default setting
1	Defining the effective direction of the positioner set-point value	Normally closed/ normally open (depending on the device variant)
2	Safety position at supply voltage <18.5 V	On / 0%
3	Set input signal 1 set-point value	Depends on device variant
4	Set output signal[4)]	Depends on device variant
5	Safety position in case of communication failure büS/CANopen	On (only for büS/CANopen device variants)
6	Calibration of the position sensor[5)]	
	a) Run X.TUNE	Not implemented
	b) Set end position (see “8.4.1.1”)	Not implemented
7	Configuring the büS interface	-

4) *Only for devices with the analogue output*

5) *Calibration of the position sensor (X-TUNE function) and adjustment of the lower end position is only necessary for devices in which the actuator and valve body are not yet screwed together at the factory. If the screw connection between the actuator and the valve body is loosened during a service, the X.TUNE function must also be carried out and the lower end position must be readjusted. Setting the lower end position is only possible with installer or Bürkert user rights.*

MAN 1000547946 EN Version: F Status: RL (released | freigegeben) printed: 09.10.2026

valvesgo.com

8.4.1.1 Set end position

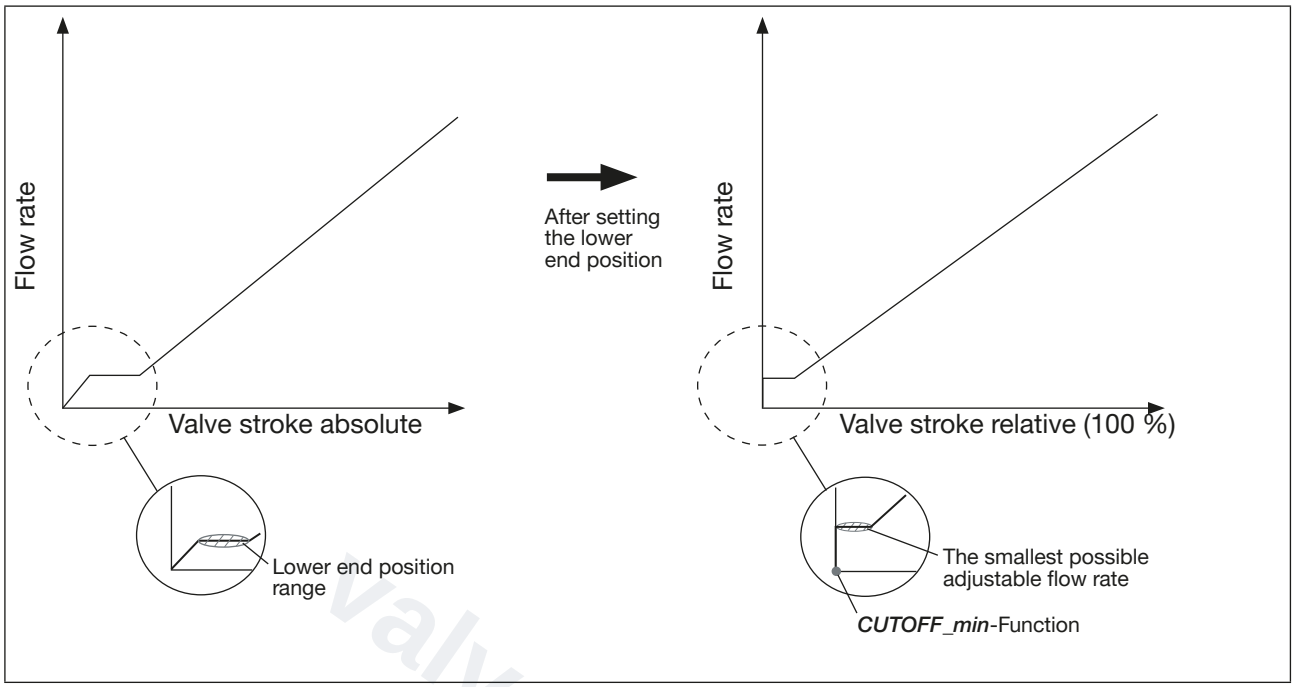

Fig. 15: Flow rate characteristics

The lower end position can be set automatically to a factory predefined position after the *X-TUNE* or manually with a flow sensor.

The lower end position defines the lowest possible adjustable flow rate at the valve. To counteract thermal effects, the lower end position of the valve must be set in the range marked in the illustration.

The ***CUTOFF_min*** function of the valve (see chapter "8.5.8 CUTOFF") nevertheless ensures sealing.

8.4.2 Process controller

Base settings		Factory default setting
1	Set input signal 2 actual value	Depends on device variant
2	Scale process value	On / 0 %
	Select physical unit for process control	Per cent
	a) Process set-point value	Minimum 0%, maximum 100 %
	b) Process actual value	Minimum 0%, maximum 100 %
3	Scale process control	
	a) Set the dead band of the process controller	0.5 %
	b) Amplification factor	Kp = 1
	c) Reset time	Tn = 999 s
	d) Derivative time	Tv = 0.0 s

MAN 1000547946 EN Version: F Status: RL (released | freigegeben) printed: 09.10.2026

valvesgo.com

8.5 Settings for positioners and process controllers

8.5.1 INPUT/OUTPUT - selected standard signal

Under this menu option, enter the signal used for the set-point value or actual value.

- Current 4...20 mA (for digital variant only actual value)
- Current 0...20 mA (for digital variant only actual value)
- Voltage 0...10 V (for digital variant only actual value)
- Voltage 0...5 V for digital variant only actual value)
- CANopen/büS (only for digital variant)
- Frequency (only for digital variant)

8.5.2 SIGNAL. SIM - Simulation of the set-point value

This function can be used to simulate the set-point value. The selected set-point value source is ignored by the device during the simulation. The following wave forms can be entered:

Sinus Sinus wave

Square Square wave

Triangle Triangle wave

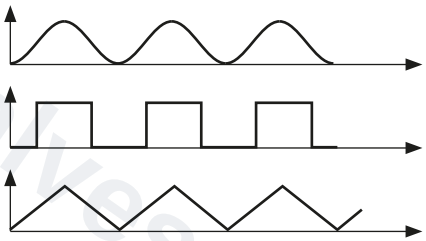

Fixed Manual input of a fixed set-point value

The following parameters can be set for the selected signal form:

Menu option	Parameter setting	Schematic representation with sine wave
Offset	(zero point shift in %)	
Amplitude	(amplitude in %)	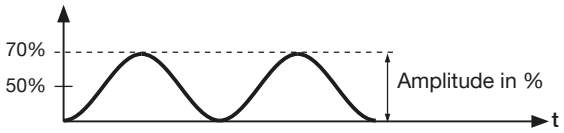
Period	(Period duration in s)	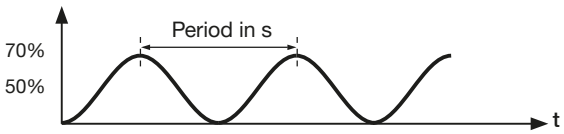

8.5.3 X.CONTROL - Parameterisation of the positioner, insensitivity range (dead band) of the positioner

Input of the dead band in %, based on the scaled stroke/rotation angle range. This function ensures that the controller does not respond until a certain control difference is reached.

MAN 1000547946 EN Version: F Status: RL (released | freigegeben) printed: 09.10.2026

valvesgo.com

8.5.4 X.TIME - limitation of control speed

If the actuator speed is to be limited, smaller actuator speeds can be entered. The following settings are possible via the Bürkert Communicator:

Operating mode	Max. control speed [sec.]
Slow 2	3.2
Slow 1	2.8
Normal	2.5
Faster	2.2

8.5.5 DIR.CMD -Effective direction of the positioner set-point value

This auxiliary function allows you to set the effective direction between the input signal (*INP*) and the set-point position (*CMD*) of the actuator.

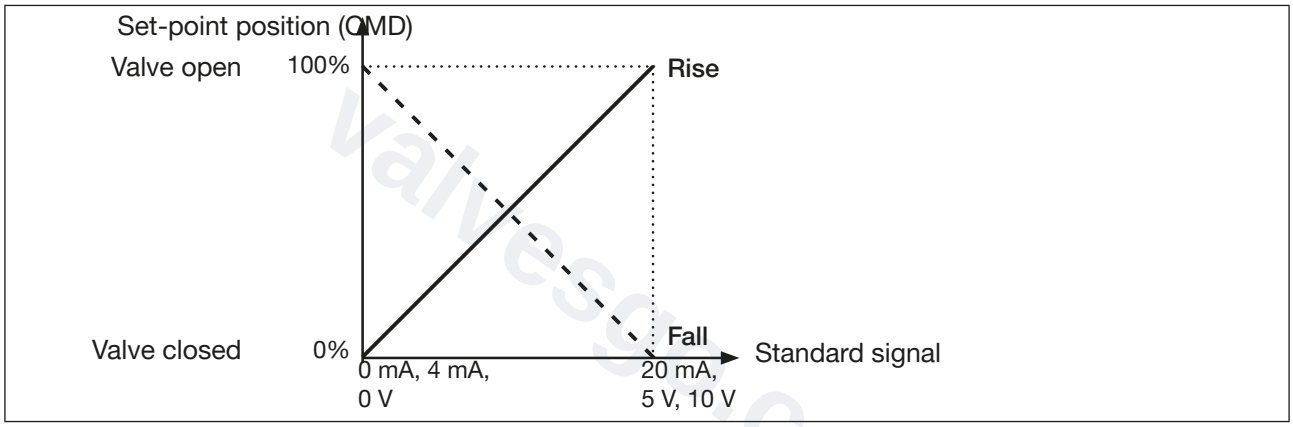

Fig. 16: Effective direction diagram

8.5.6 SAFEPOS - Entering the safety position

SAFEPOS at büS/CANopen

It can be entered how the actuator should behave in the event of communication failure. It is possible to let the actuator move to any position or to remain in the current position.

SAFEPOS when using the energy storage module (capacitive buffer module ID 773 440)
Enter the safety position.

In order to be able to start a safety position of the valve in the event of a power failure, the valve must be supplied with voltage via the capacitive buffer modules. In the event of a power failure, the buffer module provides an output voltage of 18 V DC for a few seconds. The reduced input voltage is detected by the valve and the safety position is approached accordingly. It is possible to let the actuator move to any position or remain in the current position. This Safepos function has the highest priority.

SAFEPOS at < 4 mA standard signal input of the safety position

With set-point value input 4...20 mA, if the input signal falls below 4 mA (signal error detection), it is possible to enter how the actuator should behave. It is possible to let the actuator move to the respective end positions or to remain in the current position.

MAN 1000547946 EN Version: F Status: RL (released | freigegeben) printed: 09.10.2026

valvesgo.com

8.5.7 X.LIMIT - Limitation of the mechanical valve adjustment range

This function limits the (physical) control range to predetermined % values (bottom and top). The valve adjustment range of the limited adjustment range is set equal to 100%. If the limited valve control range is left during operation, negative actual positions or actual positions greater than 100% are displayed.

Factory setting: Limit bottom setting range = 0%, limit top setting range t = 100%

Setting ranges:
Limit bottom setting range: 0...20% of the total setting range
limit top setting range: 80...100% of the total setting range

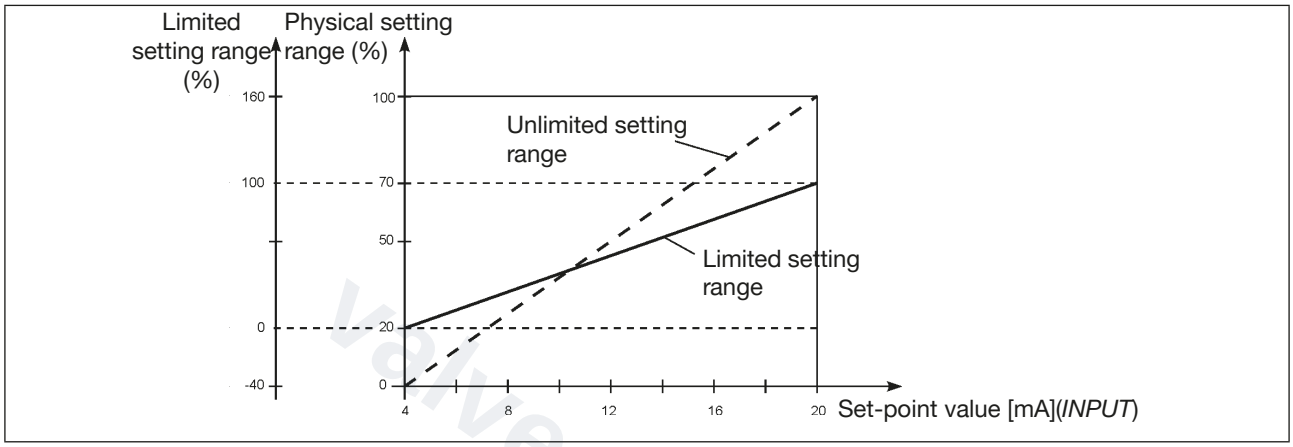

Fig. 17: Diagram X.LIMIT

8.5.8 CUTOFF

CUTOFF_min - Sealing function for positioners/process controllers

This function ensures that the valve is tightly closed outside the control range Enter limits here for the set-point position (CMD) or process set-point value from which the actuator is completely closed.

CUTOFF_max - Opening function for positioners/process controllers

This function ensures that the valve opens 100% outside the control range Enter limits for the set-point position (CMD) or process set-point value from which the actuator opens completely.

MAN 1000547946 EN Version: F Status: RL (released | freigegeben) printed: 09.10.2026

8.5.9 CHARACT - Selection of the transfer characteristic between input signal (set-point position) and stroke (correction characteristic)

With this auxiliary function, you select a transfer characteristic with regard to set-point value (set-point position, *CMD)*and valve position *(POS)* for correcting the flow or operating characteristic.

The flow characteristic k_v = f(s) indicates the flow of a valve, expressed by the $k_v$value, as a function of the displacement/angle s. It is determined by the shape of the valve seat and the valve seat seal. Two types of flow characteristics are generally realised: the linear and the equal percentile. With linear characteristics, identical stroke changes ds are allocated to the same k_v value changes dk_v (dk_v=n_{lin}*ds).

In the case of an equal percentile characteristic, a change in the valve position ds corresponds to an equal percentile change in the k_v value (dk_v/k_v= n $_{equal\ percentile}$ to *ds).
The operating characteristic Q = f(s) indicates the relationship between the volume flow Q, which flows through the valve installed in a system, and the displacement/angle s.

In the case of positioning for closed-loop controls, special requirements are usually placed on the course of the operating characteristic, e.g. linearity. For this reason, it is occasionally necessary to correct the operating characteristic in an appropriate manner. Equal percentile characteristics 1:25, 1:33, 1:50, 25:1, 33:1 and 50:1 as well as a linear characteristic can be set. In addition, it is possible to freely programme a characteristic curve via supporting points.

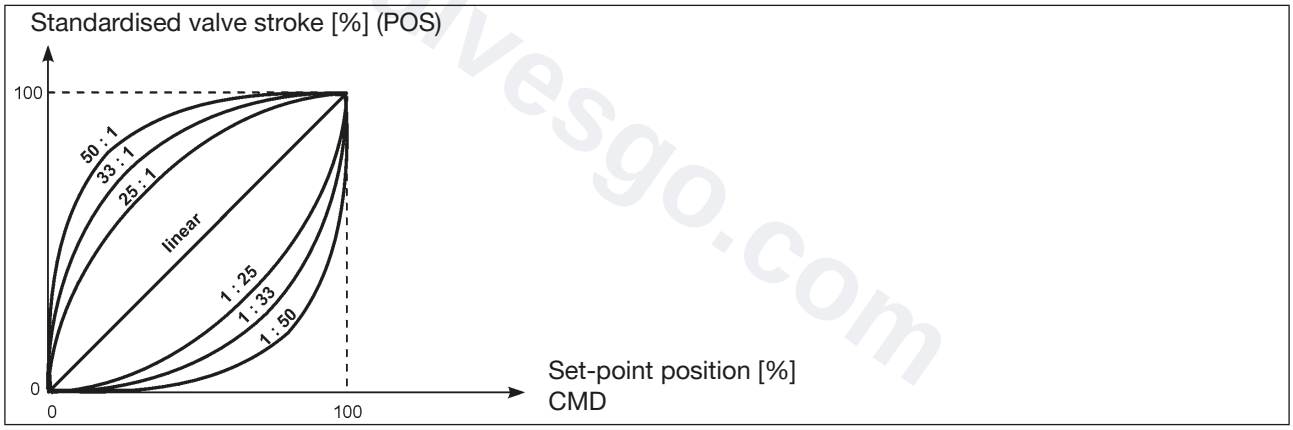

Fig. 18: Characteristics

8.5.10 Calibrate Position Sensor (X.TUNE) - Zero Flow Point Setting

When executing the zero flow point function, the position control is adjusted at the physical stroke of the actuator in use. Likewise, the zero flow point must be determined manually here.

For devices that are already firmly connected to the valve body in the delivery state, the function zero flow point setting has already been carried out at the factory.

NOTE

Execute zero flow point setting only if required.

- Run function only when the actuator has been dismantled or the valve body has been changed.

MAN 1000547946 EN Version: F Status: RL (released | freigegeben) printed: 09.10.2026

valvesgo.com

8.6 Process Controller Settings

8.6.1 PV.SCALE/SP.SCALE - Scaling the process controller

The function defines the following settings:

- Unit of process actual value
- Position of the decimal point
- Values for the lower and upper process actual value
- Lower and upper process set-point value

Scaling example for the 4...20 mA input process actual value from the transmitter: 4...20 mA corresponds to 0...10 l/min process set-point value of PLC: 4...20 mA corresponds to 0...8 l/min

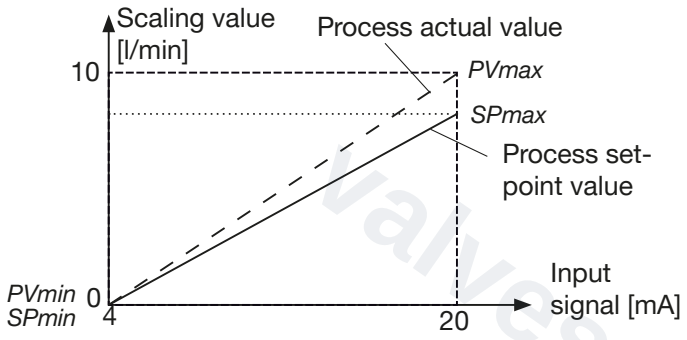

Example for entering scaling values

	Variant 1	Variant 2	Variant 3
PVmin	0	0	0
PVmax	1.0	10.0	100.0
SPmin	0	0	0
SPmax	0.8	8.0	80.0

Fig. 19: Scaling example

When setting up a process control, follow the following order: *P.LIN* → *P.TUNE*

8.6.2 P.LIN - Linearisation of the process characteristic

With this function, the process characteristic can be linearised. The supporting points for the correction characteristic are determined automatically. For this purpose, the programme passes through the valve positioning range in 20 steps and measures the corresponding measured quantity.
The correction characteristic and the corresponding value pairs are stored in the CHARACT menu option → FREE. There they can be viewed and freely programmed.

8.6.3 P.TUNE - Self-optimisation of the process controller

In order to achieve good control behaviour, the structure and parameterisation of the controller must be adapted to the properties of the process (control loop). With this function, the PID controller integrated in the process controller can be parameterised. The parameters for the P, I and D part of the PID controller are automatically determined and transferred to the corresponding menus of (KP, TN, TV). They can be viewed and changed from there.

8.6.4 P.CONTROL - Parameterisation of the process controller

- Insensitivity range (dead band).

This function ensures that the process controller does not respond until a certain control difference is reached.

- Gain factor of the process controller.

The gain factor determines the P part of the PID controller.

MAN 1000547946 EN Version: F Status: RL (released | freigegeben) printed: 09.10.2026

valvesgo.com

- Reset time of the process controller.
The reset time determines the I part of the PID controller.
- Derivative time of the process controller.
The derivative time determines the D part of the PID controller.
- Filtering of the process actual value input.
The filter of the input signal has a low-pass behavior and can be set in several stages.

Adjustment of the filter effect

Setting	Corresponds to cut-off frequency (Hz)	Effect
0	10	minimum filter effect
1	5	
2	2	
3	1	
4	0.5	
5	0.2	
6	0.1	
7	0.07	
8	0.05	
9	0.03	greatest filter effect

8.6.5 P.SIM - Simulation of the process

With this function, the process can be simulated. The following parameters can be set:

SIM.Gain Set gain factor

SIM.Delay Set time constant in seconds

Example of a simulated process:

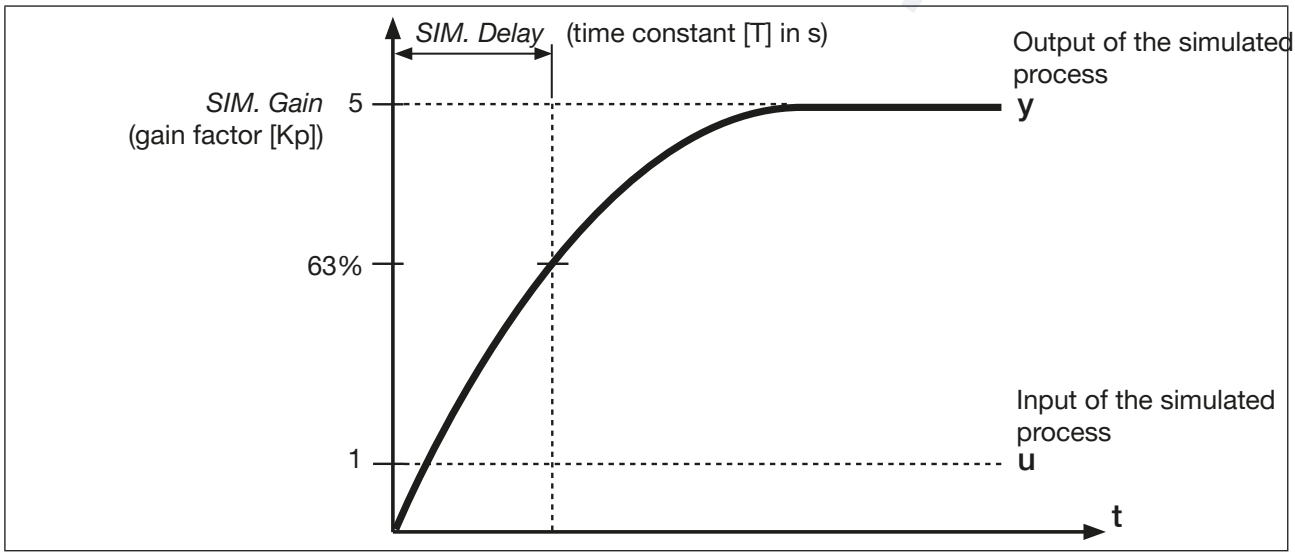

Fig. 20: Example of a simulated process. Behaviour of the PT1 element

MAN 1000547946 EN Version: F Status: RL (released | freigegeben) printed: 09.10.2026

valvesgo.com

8.7 Other settings

8.7.1 CAL INP

Calibration of the set-point position (4...20 mA; 0...20 mA; 0...5 V; 0...10 V)

This auxiliary function can be used to recalibrate the set-point input. Adoption of the minimum input signal (0 mA; 4 mA; 0 V): Create the minimum value of the standard signal at the input and confirm it in the software. Adoption of the maximum input signal (20 mA; 5 V; 10 V): Set the maximum value of the standard signal at the input and confirm it in the software.

Calibration of the actual position (4...20 mA; 0...20 mA; 0...5 V; 0...10 V)

This auxiliary function can be used to recalibrate the actual input. Adoption of the minimum input signal (0 mA; 4 mA; 0 V): Create the minimum value of the standard signal at the input and confirm it in the software. Adoption of the maximum input signal (20 mA; 5 V; 10 V): Set the maximum value of the standard signal at the input and confirm it in the software.

8.7.2 FACTORY RESET - Reset to factory settings

Using this function, all settings configured by the user can be reset to the state at delivery. All parameters except the calibration values are reset to default values. A hardware reset is then performed.

8.7.3 DIAGNOSTICS

Errors can be read out via this auxiliary function.

8.7.4 CHANGEOVER of LED DISPLAY - Changeover of LED colours between standard and NAMUR NE 107

With this function, the colours can be changed between standard and in line with NAMUR NE 107 to display the device state.

8.7.5 AUTO / MANU - Switching operating state AUTOMATIC / MANUAL

Factory setting: For devices for which the actuator and housing are not yet screwed in place ex works, the operating state MANUAL is preset.

In "Manual Mode", the valve can be moved manually with the two arrow keys "open" and "close" .

In "Automatic Mode", the position or process controller determines the valve position.

8.7.6 Access rights and password protection

There are three user levels for assigning access rights.

When password protection is enabled, the active user level is indicated by the corresponding icon.

For more information on activating password protection, see Software Manual Type 8920 Bürkert Communicator.

MAN 1000547946 EN Version: F Status: RL (released | freigegeben) printed: 09.10.2026

valvesgo.com

User level	Icon	Description
Advanced user		PIN required: Manufacturer-set code 005678 Rights: Reading values, limited right to change values.
Installer		PIN required. Manufacturer-set code 001946 Rights: reading values, expanded right to change values.
Bürkert		PIN required. Only for Bürkert employees

8.7.7 Changing the operating state

Setting in the menu AUTO / MANU

Setting option:
Settings are executed on the PC using the büS service interface and the Bürkert Communicator software. It requires the USB büS interface set available as an accessory.

Changing the operating state can be found in the AUTO / MANU menu in the General Settings configuration area.

In the MANUAL operating state - in addition to the menu AUTO / MANU - the menu MANUAL MODE is also available for manual actuation of the valve.

For devices for which the actuator and housing are not yet screwed in place ex works, the MANUAL operating state is preset. For position or process control, the AUTO operating state is active.

8.8 Configuration management

The central configuration management makes the rapid replacement of Bürkert devices possible with no configuration effort.

The central configuration management comprises a configuration provider which reads the configuration from the configuration client and saves it centrally.

The configuration client settings are available in the following menu:

Menu: General settings → Parameters detailed viewed → Configuration Client

Further information on the Configuration Client is described in the Software manual under www.burkert.com → Central configuration management of Bürkert devices

MAN 1000547946 EN Version: F Status: RL (released | freigegeben) printed: 09.10.2026

valvesgo.com

9 MAINTENANCE

WARNING

Risk of injury if maintenance work is not carried out correctly.

- Maintenance may only be carried out by trained specialists using suitable tools.
- Secure the system against unintentional activation.

9.1 Maintenance work

The device operates maintenance-free under normal conditions.

9.2 Cleaning

Clean the Type 3281 with the usual cleaning agents. Do not use alkaline cleaners, as they have damaging effects on the materials used.

9.3 Troubleshooting

Check in case of faults:

- the line connectors,
- whether the operating pressure is within the permissible range,
- the power supply and input signals.

Problem	Possible cause	Remedy
LED not lit	No electrical supply	Check electrical connections.
LED flashes sporadically white	The power supply periodically breaks down; device software reboots each time	Use a power supply with adequate power. Check cable for possible loose connections

valvesgo.com

MAN 1000547946 EN Version: F Status: RL (released | freigegeben) printed: 09.10.2026

LED is red and flashes / LED is lit red	The residual ripple of the supply voltage is too high.	Use power supply with smooth output voltage at the required power After eliminating the error to clear the red flashing LED, restart the device (disconnect from power supply)
	Temperature too high	Observe the max. ambient temperature/ medium temperature, reduce the duty cycle if necessary (see derating curve) If the device temperature drops below the set threshold value after cooling, the error is automatically deleted from the device
	Standard signal is < 4 mA; cable break	Check cable for possible loose connections
	Position sensor fault	Check the cable in the device for possible loose connections
	Communication failure büS/CANopen	Check cable for possible loose connections
No flow rate	The set-point value is below the limit for zero point shutdown.	Increase set-point value
Valve opens, although it should close	Effective direction of the set-point value is set incorrectly	Change the effective direction of the set-point value
Engine is humming unusually	Gears or engine blocked	Return device to the manufacturer for troubleshooting
Valve is not tight	Dirt between seal and valve seat	Install the strainer and return the device to the manufacturer for cleaning

MAN 1000547946 EN Version: F Status: RL (released | freigegeben) printed: 09.10.2026

valvesgo.com

10 ACCESSORIES

NOTE

Property damage due to incorrect parts.

Incorrect accessories and unsuitable spare parts may cause damage to the device.

▸ Use only original accessories and original spare parts from Bürkert.

Accessories	Order number
USB-büS-Interface set 1 (including power supply unit, büS stick, terminating resistor, Y-distributor, 0.7 m cable with M12 plug)	00772426
USB-büS-Interface set 2 (including büS stick, terminating resistor, Y-distributor, 0.7 m cable with M12 plug)	00772551

Further accessories see data sheet on the Internet.

valvesgo.com

MAN 1000547946 EN Version: F Status: RL (released | freigegeben) printed: 09.10.2026

11 PACKAGING, TRANSPORT

NOTE

Transport damage.

Inadequately protected devices may be damaged during transport.

- Protect the device against moisture and dirt in shock-resistant packaging during transportation.
- Avoid exceeding or dropping below the permitted storage temperature.
- Protect electrical interfaces from damage with protective caps.

12 STORAGE

NOTE

Incorrect storage may damage the device.

- Store the device in a dry and dust-free location!
- Storage temperature –20...+70 °C.

13 ENVIRONMENTALLY FRIENDLY DISPOSAL

- Follow national regulations regarding disposal and the environment.
- Collect electrical and electronic devices separately and dispose of them as special waste.

Further information at country.burkert.com

MAN 1000547946 EN Version: F Status: RL (released | freigegeben) printed: 09.10.2026

valvesgo.com