bürkert
FLUID CONTROL SYSTEMS

Servo-assisted 2/2-way diaphragm valve

- Servo-assisted diaphragm valve up to DN 65 orifice
- Separating diaphragm for aggressive and contaminated media
- Closing and opening times can be adjusted individually
- Explosion-proof variants (Cat. 2)
- Service-friendly manual override

Product variants described in the data sheet may differ from the product presentation and description.

Can be combined with

Type 2518
Cable plug,
form A according to
DIN EN 175301-803

Type 1087
Timer,
form A according to
DIN EN 175301-803

Type 2509
Cable plug,
form A according to
DIN EN 175301-803

Type description

The 5282 valve is a servo-assisted diaphragm valve. A minimum differential pressure is required for the valve to function. Various diaphragm material combinations and circuit functions are available depending on the application. The standard brass body satisfies all European drinking water requirements. The body offering is completed with stainless steel variants. The 3/2-way pilot valve can be easily converted from NC to NO circuit function by rotating it on the armature. The solenoid coils are moulded with a chemically resistant epoxy. The 5282 is equipped with manual override for start-up and testing. NEMA 4X is available on request.

valvesgo.com

DTS 1000011015 EN Version: X Status: RL (released | freigegeben | valide) printed: 26.02.2026

© Christian Bürkert GmbH & Co. KG, Subject to alteration

valvesgo.com

Table of contents

1. General technical data 3

2. Circuit functions 4

3. Approvals and conformities 4

3.1. General notes 4
3.2. Conformity 4
3.3. Standards 4
3.4. Explosion protection 5
3.5. North America (USA/Canada) 5
3.6. Drinking water 5
3.7. Others 6
DNV GL classification 6

4. Materials 6

4.1. Bürkert resistApp 6
4.2. Material specifications 6

5. Dimensions 7

5.1. Standard variant 7
Threaded variant 7
Flange variant according to DIN EN 1092 - 1 8
5.2. ATEX/IECEx variant 9
Threaded variant 9
Flange variant according to DIN EN 1092 - 1 10

6. Product installation 11

6.1. Mounting options 11

7. Product accessories 11

7.1. Cable glands for ATEX/IECEx terminal box 11
7.2. Special tool to turn the terminal box 12

8. Ordering information 12

8.1. Bürkert eShop 12
8.2. Bürkert product filter 12
8.3. Bürkert Product Enquiry Form 12
8.4. Ordering chart 13
Basic variant 13
Standard variant with brass body 14
Standard variant in brass with stainless steel flange body 15
Standard variant with stainless steel body 16
ATEX/IECEx variant 17
8.5. Ordering chart accessories 18
Cable plug Type 2518, form A according to DIN EN 175301 - 803 18
Cable plug Type 2509, form A according to DIN EN 175301 - 803 18
Cable glands for ATEX/IECEx terminal box 18

DTS 1000011015 EN Version: X Status: RL (released | freigegeben | valide) printed: 26.02.2026

valvesgo.com

valvesgo.com

1. General technical data

Product properties	
Dimensions	Further information can be found in chapter "5. Dimensions" on page 7.
Material	
Seal	NBR, EPDM, FKM
Flange body	Stainless steel 1.4581/316CB
Threaded body	Brass according to DIN EN 50930 – 6 DN 13 stainless steel CF3M DN 20...DN 50 stainless steel 1.4581/316CB
Coil	Epoxy
Internal valve parts	Stainless steel, brass
Orifice	DN 13...DN 65
Circuit function	A and B Further information can be found in chapter "2. Circuit functions" on page 4.
Thermal insulation class of solenoid coil	Epoxy coil class H
Performance data	
Duty cycle	100 % continuous operation
Switching time [1)]	Opening: 0.1...0.8 s Closing: 1.0...4.0 s
Electrical data	
Operating voltage	24 V DC, 24 V 56 Hz, 230 V 56 Hz, 24 V AC/DC, 230 V AC/DC
Power consumption	
Standard variant	Inrush: AC 30 VA Operation: AC 15/8 VA W DC cold/warm: 11/8 W
Explosion-proof variant	Inrush: AC 40 VA Operation: AC 3 VA W DC cold/warm: 40 W inrush / 3 W operation
Voltage tolerance	± 10 %
Medium data	
Operating medium	
With NBR	Neutral gases and liquids (e.g. compressed air, water, hydraulic oil)
With EPDM	Oil-free and grease-free media, alkalis, hot water
With FKM	Hot air, per solutions, hot oils
Medium temperature	
With NBR	0 °C...+ 80 °C
With EPDM	- 25 °C...+ 90 °C
With FKM	0 °C...+ 90 °C
Product connections	
Electrical connection	
Standard variant	• Cable plug **Type 2518** ▶, form A according to DIN EN 175301 - 803 Further information can be found in chapter "Cable plug Type 2518, form A according to DIN EN 175301 - 803" on page 18. • Cable plug **Type 2509** ▶, form A according to DIN EN 175301 - 803 Further information can be found in chapter "Cable plug Type 2509, form A according to DIN EN 175301 - 803" on page 18.
Explosion-proof variant	Moulded 3 meter cable, 3 × 0.5 mm² Terminal box
Approvals and conformities	
Directive	CE, EAC
Degree of protection	IP65 with cable plug according to DIN EN 175301 - 803 form A IP65 with cable connection or terminal box
Explosion protection	Further information can be found in chapter "3.4. Explosion protection" on page 5.
North America (USA/Canada)	Further information can be found in chapter "3.5. North America (USA/Canada)" on page 5.
Others	Further information can be found in chapter "3.7. Others" on page 6.

DTS 1000011015 EN Version: X Status: RL (released | freigegeben | valide) printed: 26.02.2026

valvesgo.com

Environment and installation	
Installation position	As required, preferably with actuator upright
Ambient temperature	Max. + 55 °C

1.) Measurement at + 20 °C, 6 bar at the valve outlet, opening: pressure build-up 0...90 %, closing: pressure reduction 100...10 %
The switching time can be changed by turning the throttle screws (in the housing lid).

2. Circuit functions

Symbol	Description
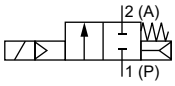	**Circuit function A (CF A)** 2/2-way solenoid valve Servo-controlled Normally closed
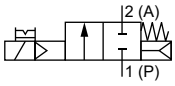	**Circuit function A (CF A)** 2/2-way solenoid valve Servo-controlled, with manual override Normally closed
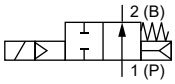	**Circuit function B (CF B)** 2/2-way solenoid valve Servo-controlled Normally open
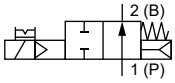	**Circuit function B (CF B)** 2/2-way solenoid valve Servo-controlled, with manual override Normally open

3. Approvals and conformities

3.1. General notes

- The approvals and conformities listed below must be stated when making enquiries. This is the only way to ensure that the product complies with all required specifications.
- Not all available variants can be supplied with the below mentioned approvals or conformities.

3.2. Conformity

In accordance with the Declaration of Conformity, the product is compliant with the EU Directives.

3.3. Standards

The applied standards which are used to demonstrate compliance with the EU Directives are listed in the EU-Type Examination Certificate and/or the EU Declaration of Conformity.

DTS 1000011015 EN Version: X Status: RL (released | freigegeben | valide) printed: 26.02.2026

valvesgo.com

3.4. Explosion protection

Approval	Description
	Optional: Explosion protection according to category 2 (zone 1/21) Ex marking of the components according to the following table:

Coil Type ACP016	
Coils with cable outlet	**Coils with terminal box**
ATEX: EPS 16 ATEX 1 111 X II 2 G Ex mb IIC T4 Gb II 2 D Ex mb IIIC T130 °C Db **IECEx:** IECEx EPS 16.0049X Ex mb IIC T4 Gb Ex mb IIIC T130 °C Db	**ATEX:** EPS 16 ATEX 1 111 X II 2G Ex eb mb IIC T4 Gb II 2D Ex mb tb IIIC T130 °C Db **IECEx:** IECEx EPS 16.0049X Ex eb mb IIC T4 Gb Ex mb tb IIIC T130 °C Db

3.5. North America (USA/Canada)

Approval	Description
LISTED	**Valid for valves: UL Listed for the USA** The valves are UL Listed for the USA according to: • UL 429 (electrically operated valves) and UL 429A (Electrically Operated Valves for Fire Protection Service)
C UL US LISTED SOLENOID FOR USE IN HAZARDOUS LOCATIONS E504714	**Valid for coils: UL Hazardous Locations – Explosion Protection** UL Listed for Hazardous Locations for USA and Canada Class I, Zone 1 Class I, Division 2, Group A, B, C and D Class II + III, Division 2, Group F and G
	Valid for valves: UL Recognized for the USA The valves are UL Recognized for the USA according to: • UL 429 (electrically operated valves) and UL 429A (Electrically Operated Valves for Fire Protection Service)
	Valid for valves: CSA for Canada The valves are CSA approved for Canada according to: • CSA 139 (electrically operated valves)
FM C US APPROVED	**Valid for coils: FM (Factory Mutual) – Explosion Protection** FM for Hazardous Locations for USA and Canada Class I, Zone 1 Class I, Division 1, Groups A, B, C and D Class II + III, Division 1, Groups E, F and G

3.6. Drinking water

Conformity	Description
H_2O	**Suitable for use in drinking water applications** The materials comply with the assessment principles (UBA) for materials in contact with drinking water (Trinkwasserv). PF39: Suitable for products with a maximum temperature of + 85 °C (hot water) PF36: Suitable for products with a maximum temperature of + 60 °C (warm water)

DTS 1000011015 EN Version: X Status: RL (released | freigegeben | valide) printed: 26.02.2026

valvesgo.com

3.7. Others

DNV GL classification

Approval	Description
TYPE APPROVED PRODUCT DNV DNV.COM/AF	**DNV GL classification – Ships, offshore units, and high speed and light craft** The products are accepted for installation on all vessels classed by DNV GL.

4. Materials

4.1. Bürkert resistApp

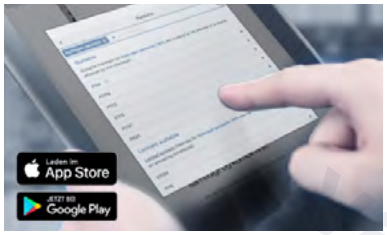

Bürkert resistApp – Chemical resistance chart

You want to ensure the reliability and durability of the materials in your individual application case? Verify your combination of media and materials on our website or in our resistApp.

Start chemical resistance check

4.2. Material specifications

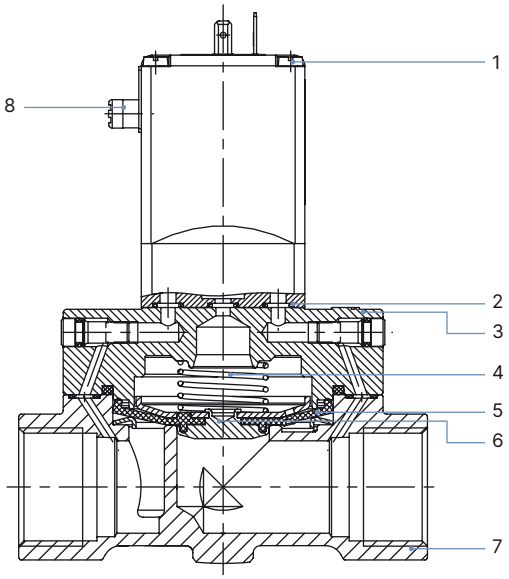

No.	Element	Material
1	Coil	Epoxy
2	O-ring	NBR, EPDM, FKM
3	Cover	Brass DN 13 stainless steel 1.4408/316 DN 20...DN 50 stainless steel 1.4581/316CB
4	Spring	Stainless steel 1.4310/302
5	Diaphragm	NBR, EPDM, FKM
6	Diaphragm holder	Brass, stainless steel 1.4401 /316
7	Valve body	Brass DN 13 stainless steel CF3M DN 20...DN 50 stainless steel 1.4581/316CB
8	Manual override	PA

DTS 1000011015 EN Version: X Status: RL (released | freigegeben | valide) printed: 26.02.2026

valvesgo.com

5. Dimensions

5.1. Standard variant

Threaded variant

Note:

- Dimensions in mm
- The dimensions D1 and F1 apply to G thread.
- The dimensions D2 and F2 apply to NPT thread.
- The dimensions D3 and F3 apply to Rc thread.

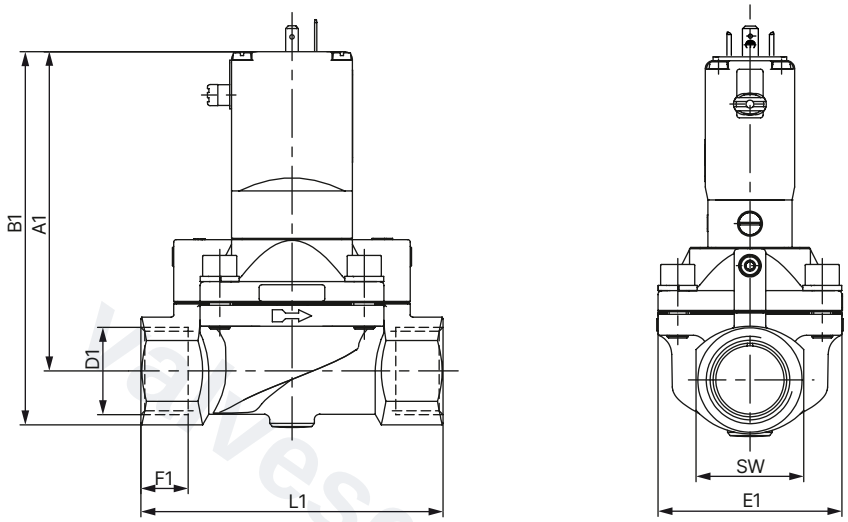

DN	A1	B1	G		NPT		Rc		E1	L1	SW
			D1	F1	D2	F2	D3	F3			
13 1.)	109.0	123.0	G ½	14	NPT ½	13.7	Rc ½	13.2	40	65	27
13 2.)	108.0	124.0	G ½	14	NPT ½	13.7	Rc ½	13.2	40	65	27
13 2.)	110.0	126.0	G ¾	16	NPT ¾	14.0	Rc ¾	14.5	40	65	32
20 2.)	115.0	131.0	G ½	14	NPT ½	13.7	Rc ½	13.2	60	100	32
20	115.0	131.0	G ¾	16	NPT ¾	14.0	Rc ¾	14.5	60	100	32
25	121.5	142.0	G 1	18	NPT 1	16.8	Rc 1	16.8	70	115	41
32	122.0	147.0	G 1¼	20	NPT 1¼	17.3	Rc 1¼	19.1	85	126	50
40	126.0	156.0	G 1½	22	NPT 1½	17.3	Rc 1½	19.1	85	126	60
50	142.5	177.5	G 2	24	NPT 2	17.6	Rc 2	23.4	115	164	70
65	142.5	185.0	G 2½	27	NPT 2½	23.6	–	–	115	180	85

1.) Only threaded brass connection
2.) Only threaded stainless steel connection

DTS 1000011015 EN Version: X Status: RL (released | freigegeben | valide) printed: 26.02.2026

valvesgo.com

Flange variant according to DIN EN 1092 - 1

Note:
Dimensions in mm

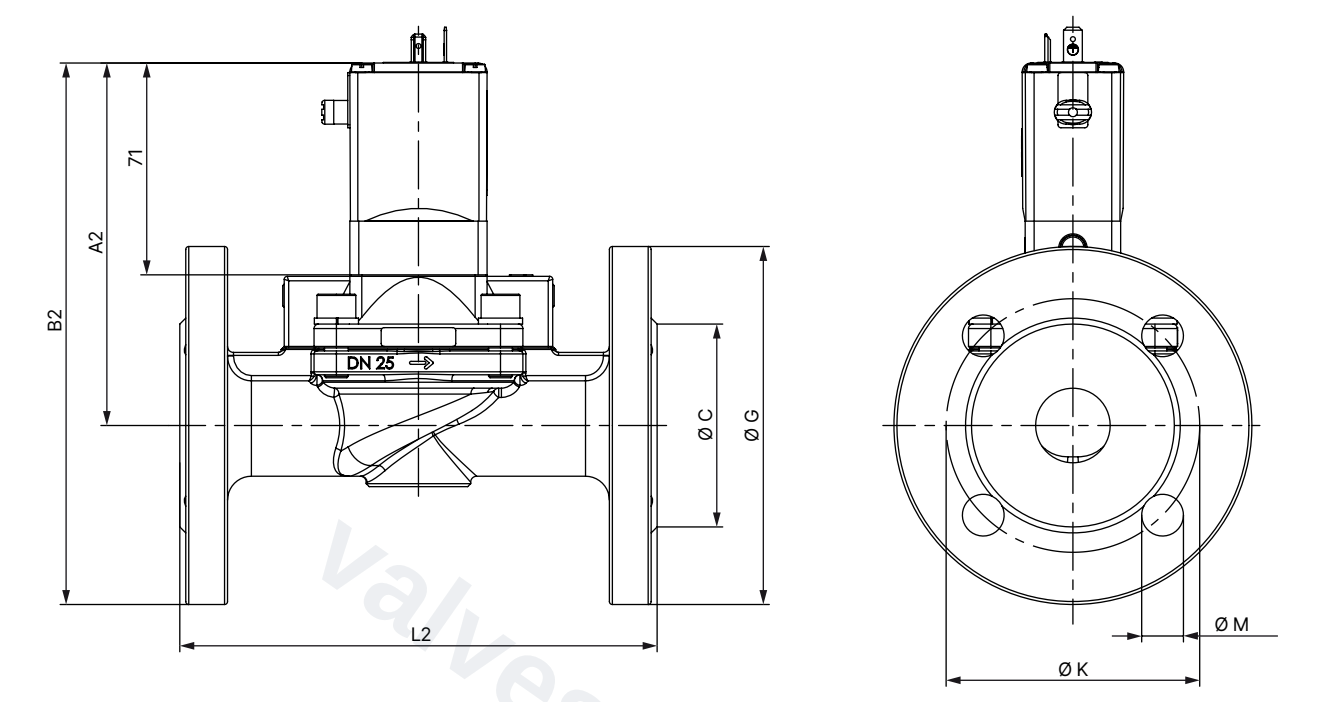

Variant	DN	A2	B2	Ø C	Ø G	L2	Ø M	Ø K
Brass with cast stainless steel body	25	121.5	181.5	68	120	160	14	85
	32	122.0	192.0	78	140	180	18	100
	40	128.0	203.0	88	150	200	18	110
	50	142.8	225.3	102	165	230	18	125
Stainless steel with cast stainless steel body	25	120.5	180.5	68	120	160	14	85
	32	122.0	192.0	78	140	180	18	100
	40	128.0	203.0	88	150	200	18	110
	50	142.8	225.3	102	165	230	18	125

DTS 1000011015 EN Version: X Status: RL (released | freigegeben | valide) printed: 26.02.2026

valvesgo.com

5.2. ATEX/IECEx variant

Threaded variant

Note:

- Dimensions in mm
- The dimensions D1 and F1 apply to G thread.
- The dimensions D2 and F2 apply to NPT thread.
- The dimensions D3 and F3 apply to Rc thread.

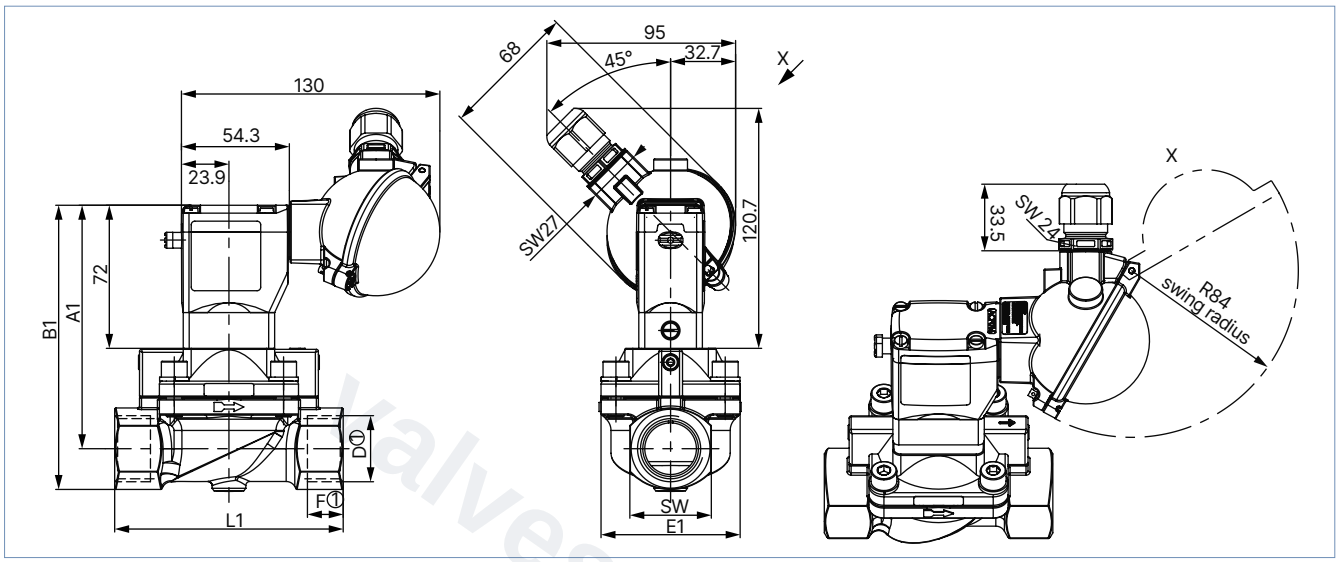

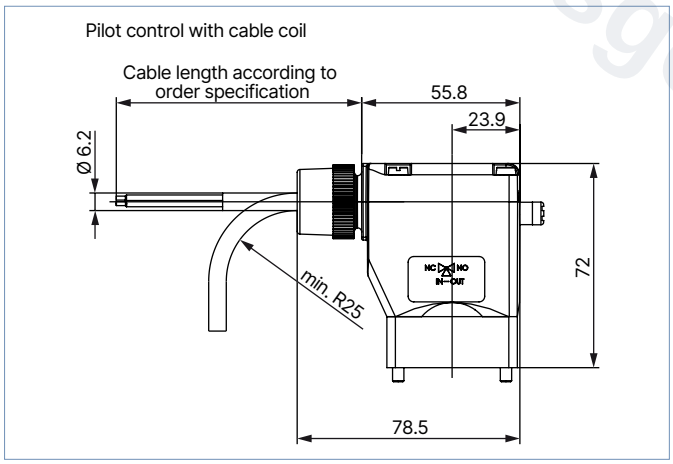

DN	A1	B1	G		NPT		Rc		E1	L1	AF
			D1	F1	D2	F2	D3	F3			
13 1.)	110.0	124.0	G ½	14	NPT ½	13.7	Rc ½	13.2	40	65	27
13 2.)	109.0	125.0	G ½	14	NPT ½	13.7	Rc ½	13.2	40	65	27
13 2.)	111.0	127.0	G ¾	16	NPT ¾	14.0	Rc ¾	14.5	40	65	32
20 2.)	116.0	132.0	G ½	14	NPT ½	13.7	Rc ½	13.2	60	100	32
20	116.0	132.0	G ¾	16	NPT ¾	14.0	Rc ¾	14.5	60	100	32
25	122.5	143.0	G 1	18	NPT 1	16.8	Rc 1	16.8	70	115	41
32	123.0	148.0	G 1¼	20	NPT 1¼	17.3	Rc 1¼	19.1	85	126	50
40	127.0	157.0	G 1½	22	NPT 1½	17.3	Rc 1½	19.1	85	126	60
50	143.8	178.8	G 2	24	NPT 2	17.6	Rc 2	23.4	115	164	70
65	143.5	186.0	G 2½	27	NPT 2½	23.6	–	–	115	180	85

1.) Only threaded brass connection
2.) Only threaded stainless steel connection

DTS 1000011015 EN Version: X Status: RL (released | freigegeben | valide) printed: 26.02.2026

valvesgo.com

Flange variant according to DIN EN 1092 - 1

Note:

- Dimensions in mm
- Refer to **"Threaded variant" on page 9** for more information about coil and terminal box dimensions.

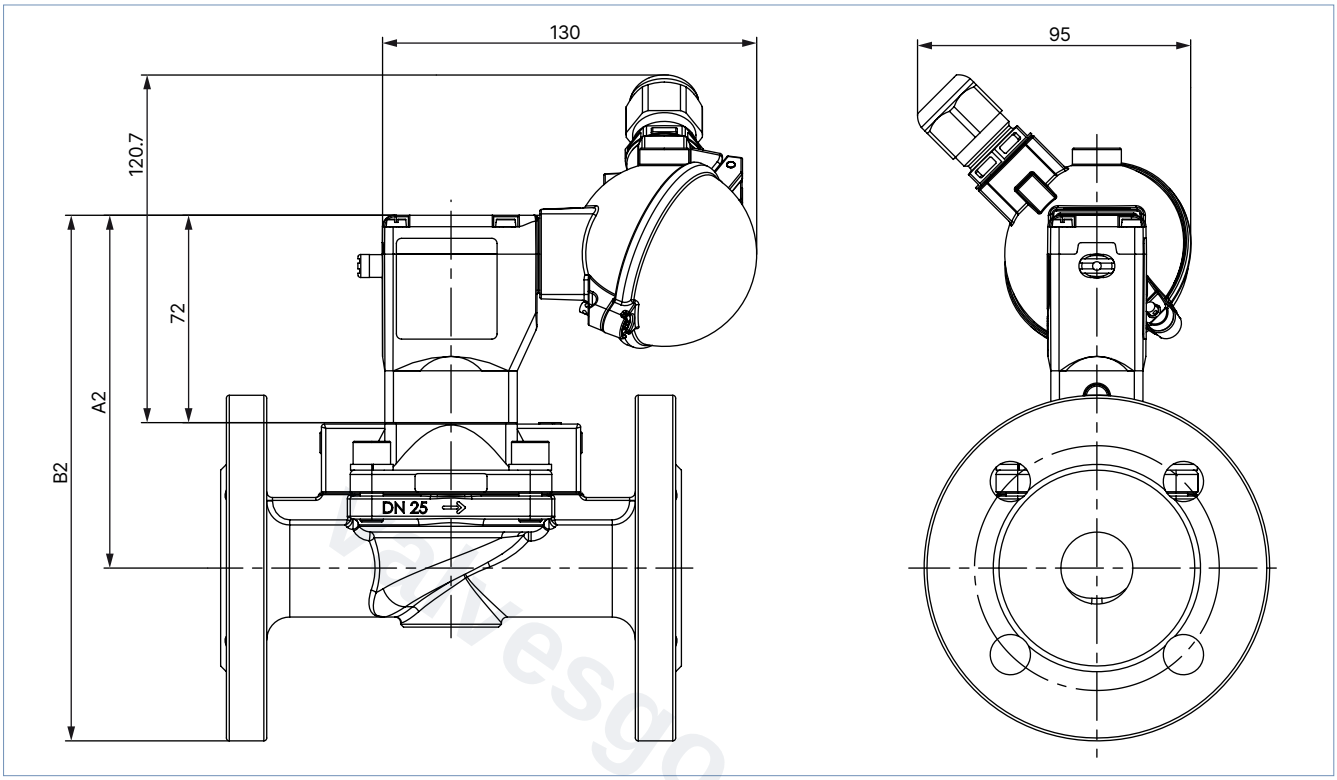

Variant	DN	A2	B2	Ø C	Ø G	L2	Ø M	Ø K
Brass with cast stainless steel body	25	122.5	182.5	68	120	160	14	85
	32	123.0	193.0	78	140	180	18	100
	40	129.0	204.0	88	150	200	18	110
	50	143.8	226.3	102	165	230	18	125
Stainless steel with cast stainless steel body	25	121.5	181.5	68	120	160	14	85
	32	123.0	193.0	78	140	180	18	100
	40	129.0	204.0	88	150	200	18	110
	50	143.8	226.3	102	165	230	18	125

DTS 1000011015 EN Version: X Status: RL (released | freigegeben | valide) printed: 26.02.2026

valvesgo.com

6. Product installation

6.1. Mounting options

Note:

- The delivery condition corresponds to the order key. Turning the pilot valve through 180° changes the circuit function of the valve.
- The circuit function can only be changed for variants up to 10 bar.

Circuit function A	Circuit function B
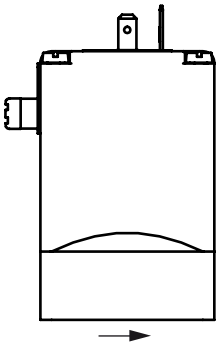 Flow direction	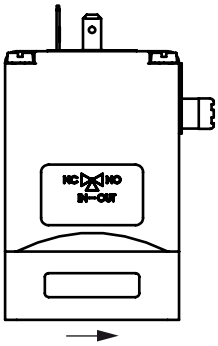 Flow direction

7. Product accessories

7.1. Cable glands for ATEX/IECEx terminal box

Note:
A polyamide cable gland is included in the scope of delivery. A nickel-plated brass variant can be ordered for a surcharge, see "8.5. Ordering chart accessories" on page 18.

Description	Ex approval		Dimensions	
	Certification	Identification		
Ex cable gland, nickel-plated brass, 6...13 mm 	PTB 04 ATEX 1112 X, IECEx PTB 13.0027X	II 2 G Ex e IIC Gb, II 2 D Ex tb IIIC Db IP68	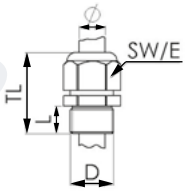	TL 29...37 mm L 6 mm D 20 mm SW 24 mm E 27 mm
Ex cable gland, polyamide, 7..13 mm 	PTB 13 ATEX 1015 X, IECEx PTB 13.0034X	II 2 G Ex e IIC Gb, II 2 D Ex tb IIIC Db IP68	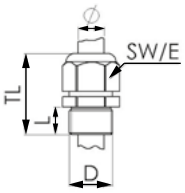	TL 36...45 mm L 10 mm D 20 mm SW 24 mm E 28 mm

DTS 1000011015 EN Version: X Status: RL (released | freigegeben | valide) printed: 26.02.2026

valvesgo.com

7.2. Special tool to turn the terminal box

Note:
This special tool is not included in the scope of delivery of the valve, see "8.5. Ordering chart accessories" on page 18.

Description	Components of the set
Set SC02-AC10 	• Special tool • Service manual

8. Ordering information

8.1. Bürkert eShop

Bürkert eShop – Easy ordering and quick delivery

You want to find your desired Bürkert product or spare part quickly and order directly? Our online shop is available for you 24/7. Sign up and enjoy all the benefits.

Order online now

8.2. Bürkert product filter

Bürkert product filter – Get quickly to the right product

You want to select products comfortably based on your technical requirements?
Use the Bürkert product filter and find suitable articles for your application quickly and easily.

Try out our product filter

8.3. Bürkert Product Enquiry Form

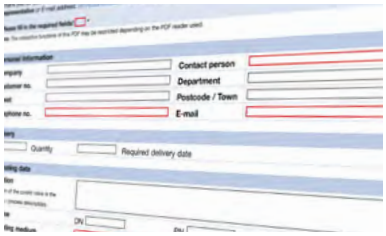

Bürkert Product Enquiry Form – Your enquiry quickly and compactly

Would you like to make a specific product enquiry based on your technical requirements? Use our Product Enquiry Form for this purpose. There you will find all the relevant information for your Bürkert contact. This will enable us to provide you with the best possible advice.

Fill out the form now

DTS 1000011015 EN Version: X Status: RL (released | freigegeben | valide) printed: 26.02.2026

valvesgo.com

8.4. Ordering chart

Basic variant

Note:
Please note that the cable plug must be ordered separately, see **"8.5. Ordering chart accessories" on page 18** or separate data sheet **Type 2518** ▶.

Circuit function	Port connection	Orifice	Flow coefficient water[1.) 2.)]	Pressure range[3.)]	Weight	Article no.		
						024/DC	024/50...60	230/50...60
		[mm]	[m³/h]	[bar]	[kg]	[V/Hz]	[V/Hz]	[V/Hz]
With threaded connection without manual override, without adjustable opening and closing times, without cable plug								
CF A 2/2-way solenoid valve Servo-controlled Normally closed 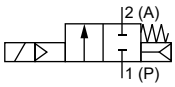	**Brass body and seal material NBR, pressure range 0.2...16 bar**							
	G ½	13.0	4.0	0.2...16	0.95	20068749	o. r.	20068752
	G ¾	20.0	6.5	0.2...16	1.40	20068750	o. r.	20068753
	G 1	25.0	10.0	0.2...16	1.85	20068751	o. r.	20068754
	G 1¼	32.0	20.0	0.2...16	2.60	o. r.	o. r.	o. r.
	G 1½	40.0	20.0	0.2...16	3.05	o. r.	o. r.	o. r.
	G 2	50.0	40.0	0.2...16	5.15	o. r.	o. r.	o. r.
	G 2½	65.0	40.0	0.2...16	5.90	o. r.	o. r.	o. r.
	Stainless steel body and seal material FKM, pressure range 0.2...12 bar							
	G ½	13.0	4.0	0.2...12	0.95	20068755	o. r.	20068758
	G ¾	20.0	6.5	0.2...12	1.40	20068756	o. r.	20068759
	G 1	25.0	10.0	0.2...12	1.85	20068757	o. r.	20068760
	G 1¼	32.0	20.0	0.2...12	2.60	o. r.	o. r.	o. r.
	G 1½	40.0	20.0	0.2...12	3.05	o. r.	o. r.	o. r.
	G 2	50.0	40.0	0.2...12	5.15	o. r.	o. r.	o. r.
	G 2½	65.0	40.0	0.2...12	5.90	o. r.	o. r.	o. r.

o. r. = on request
1.) Measurement at + 20 °C, 1 bar[2.)] at the valve inlet and free outlet
2.) A pressure difference of 0.5 bar is required to open the full cross-section.
3.) Pressure data: overpressure to atmospheric pressure

DTS 1000011015 EN Version: X Status: RL (released | freigegeben | valide) printed: 26.02.2026

valvesgo.com

Standard variant with brass body

Note:
Please note that the cable plug must be ordered separately, see **"8.5. Ordering chart accessories" on page 18** or separate data sheet **Type 2518** ▶.

Circuit function	Port connection	Orifice	Flow coefficient water[1.) 2.)]	Pressure range[3.)]	Weight	Article no.		
						024/DC	024/50...60	230/50...60
		[mm]	[m³/h]	[bar]	[kg]	[V/Hz]	[V/Hz]	[V/Hz]
With threaded connection and manual override, without cable plug								
CF A 2/2-way solenoid valve Servo-controlled, with manual override Normally closed 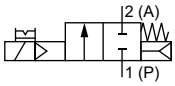 	**Seal material NBR, pressure range 0.2...10 bar**							
	G ½	13.0	4.0	0.2...10	0.95	134430	134431	134433
	G ¾	20.0	6.5	0.2...10	1.40	134434	134435	134437
	G 1	25.0	10.0	0.2...10	1.85	134438	134439	134441
	G 1¼	32.0	20.0	0.2...10	2.60	134442	134443	134445
	G 1½	40.0	20.0	0.2...10	3.05	134446	134447	134449
	G 2	50.0	40.0	0.2...10	5.15	134450	134451	134453
	G 2½	65.0	40.0	0.2...10	5.90	134454	134455	134457
CF B 2/2-way solenoid valve Servo-controlled, with manual override Normally open 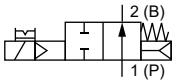 	**Seal material FKM, pressure range 0.2...10 bar**							
	G ½	13.0	4.0	0.2...10	0.95	134486	134487	134489
	G ¾	20.0	6.5	0.2...10	1.40	134490	134491	134493
	G 1	25.0	10.0	0.2...10	1.85	134494	134495	134497
	G 1¼	32.0	20.0	0.2...10	2.60	134498	134499	134501
	G 1½	40.0	20.0	0.2...10	3.05	134502	134503	134505
	G 2	50.0	40.0	0.2...10	5.15	134506	134507	134509
	G 2½	65.0	40.0	0.2...10	5.90	134510	134511	134513
	Seal material EPDM, pressure range 0.2...10 bar							
	G ½	13.0	4.0	0.2...10	0.95	134458	134459	134461
	G ¾	20.0	6.5	0.2...10	1.40	134462	134463	134465
	G 1	25.0	10.0	0.2...10	1.85	134466	134467	134469
	G 1¼	32.0	20.0	0.2...10	2.60	134470	134471	134473
	G 1½	40.0	20.0	0.2...10	3.05	134474	134475	134477
	G 2	50.0	40.0	0.2...10	5.15	134478	134479	134481
	G 2½	65.0	40.0	0.2...10	5.90	134482	134483	134485
CF A 2/2-way solenoid valve Servo-controlled, with manual override Normally closed 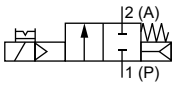 	**Seal material NBR, pressure range 0.2...16 bar**							
	G ½	13.0	4.0	0.2...16	0.95	187421	254814	187422
	G ¾	20.0	6.5	0.2...16	1.40	187423	237670	186719
	G 1	25.0	10.0	0.2...16	1.85	202683	246449	183126
	G 1¼	32.0	20.0	0.2...16	2.60	202684	o. r.	202680
	G 1½	40.0	20.0	0.2...16	3.05	202685	209365	202681
	G 2	50.0	40.0	0.2...16	5.15	202686	318245	202682
CF B 2/2-way solenoid valve Servo-controlled, with manual override Normally open 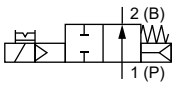 	**Seal material NBR, pressure range 0.2...16 bar**							
	G ½	13.0	4.0	0.2...16	0.95	184959	250917	184960
	G ¾	20.0	6.5	0.2...16	1.40	189506	o. r.	189342
	G 1	25.0	10.0	0.2...16	1.85	183129	223653	183132
	G 1¼	32.0	20.0	0.2...16	2.60	242280	o. r.	242277
	G 1½	40.0	20.0	0.2...16	3.05	207728	o. r.	214331
	G 2	50.0	40.0	0.2...16	5.15	242281	o. r.	242278

o. r. = on request
1.) Measurement at + 20 °C, 1 bar[2.)] at the valve inlet and free outlet
2.) A pressure difference of 0.5 bar is required to open the full cross-section.
3.) Pressure data: overpressure to atmospheric pressure

DTS 1000011015 EN Version: X Status: RL (released | freigegeben | valide) printed: 26.02.2026

valvesgo.com

Standard variant in brass with stainless steel flange body

Note:
Please note that the cable plug must be ordered separately, see **"8.5. Ordering chart accessories" on page 18** or separate data sheet **Type 2518** ▶.

Circuit function	Port connection	Orifice	K_V value water 1.) 2.)	Pressure range 3.)	Weight	Article no.	
						024/DC	230/50...60
		[mm]	[m³/h]	[bar]	[kg]	[V/Hz]	[V/Hz]
With flange connection acc. to DIN EN 1092 - 1 and manual override, without cable plug							
CF A 2/2-way solenoid valve Servo-controlled, with manual override Normally closed 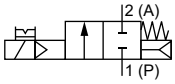 	**Seal material NBR, pressure range 0.2...10 bar**						
	Flange	25.0	10.0	0.2...10	5.2	355263	355266
	Flange	32.0	20.0	0.2...10	6.7	355269	o. r.
	Flange	40.0	20.0	0.2...10	7.4	355261	355265
	Flange	50.0	40.0	0.2...10	11.5	355264	355259
CF B 2/2-way solenoid valve Servo-controlled, with manual override Normally open 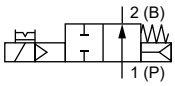 							

o. r. = on request
1.) Measurement at + 20 °C, 1 bar 2.) at the valve inlet and free outlet
2.) A pressure difference of 0.5 bar is required to open the full cross-section.
3.) Pressure data: overpressure to atmospheric pressure

DTS 1000011015 EN Version: X Status: RL (released | freigegeben | valide) printed: 26.02.2026

valvesgo.com

valvesgo.com

Standard variant with stainless steel body

Note:
Please note that the cable plug must be ordered separately, see "8.5. Ordering chart accessories" on page 18 or separate data sheet **Type 2518** ▶.

Circuit function	Port connection	Orifice	Flow coefficient water[1.) 2.)]	Pressure range[3.)]	Weight	Article no.		
						024/DC	024/50...60	230/50...60
		[mm]	[m³/h]	[bar]	[kg]	[V/Hz]	[V/Hz]	[V/Hz]
With threaded or flange connection and manual override, without cable plug								
CF A 2/2-way solenoid valve Servo-controlled, with manual override Normally closed 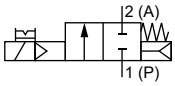 	**Threaded connection, seal material NBR, pressure range 0.2...10 bar**							
	G ½	13.0	4.0	0.2...10	0.91	281976	281979	281981
	G ¾	20.0	6.5	0.2...10	1.40	137142	137143	137145
	G 1	25.0	10.0	0.2...10	1.80	137146	137147	137149
	G 1¼	32.0	20.0	0.2...10	2.25	137150	137151	137153
	G 1½	40.0	20.0	0.2...10	2.70	137154	137155	137157
	G 2	50.0	40.0	0.2...10	4.80	137158	137159	137161
CF B 2/2-way solenoid valve Servo-controlled, with manual override Normally open 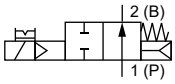 	**Threaded connection, seal material FKM, pressure range 0.2...10 bar**							
	G ½	13.0	4.0	0.2...10	0.91	220291	220292	220294
	G ¾	20.0	6.5	0.2...10	1.40	134518	134519	134521
	G 1	25.0	10.0	0.2...10	1.80	134522	134523	134525
	G 1¼	32.0	20.0	0.2...10	2.25	134526	134527	134529
	G 1½	40.0	20.0	0.2...10	2.70	134530	134531	134533
	G 2	50.0	40.0	0.2...10	4.80	134534	134535	134537
	Threaded connection, seal material EPDM, pressure range 0.2...10 bar							
	G ½	13.0	4.0	0.2...10	0.91	220297	220298	220300
	G ¾	20.0	6.5	0.2...10	1.40	145709	o. r.	141714
	G 1	25.0	10.0	0.2...10	1.80	141078	93909807	146160
	G 1¼	32.0	20.0	0.2...10	2.25	438559	o. r.	147803
	G 1½	40.0	20.0	0.2...10	2.70	141667	o. r.	139823
	G 2	50.0	40.0	0.2...10	4.80	141075	o. r.	146530
	Flange connection according to DIN EN 1092 - 1, seal material FKM, pressure range 0.2...10 bar							
	Flange	25.0	10.0	0.2...10	5.1	361400	361401	361403
	Flange	32.0	20.0	0.2...10	6.45	361404	361405	361406
	Flange	40.0	20.0	0.2...10	7.2	361407	361408	361409
	Flange	50.0	40.0	0.2...10	11.3	361410	361411	361412
	Flange connection according to DIN EN 1092 - 1, seal material EPDM, pressure range 0.2...10 bar							
	Flange	25.0	10.0	0.2...10	5.1	371943	o. r.	368163
	Flange	32.0	20.0	0.2...10	6.45	o. r.	o. r.	367561
	Flange	40.0	20.0	0.2...10	7.2	o. r.	o. r.	o. r.
	Flange	50.0	40.0	0.2...10	11.3	361414	o. r.	367562

o. r. = on request
1.) Measurement at + 20 °C, 1 bar[2.)] at the valve inlet and free outlet
2.) A pressure difference of 0.5 bar is required to open the full cross-section.
3.) Pressure data: overpressure to atmospheric pressure

Further variants on request

Additionally
With optical position indicator or electrical position feedback sensor as potential-free contact or Namur signal

Pressure
Pressure range up to 16 bar

Approval
UL, UR, CSA, Hazardous Locations Expl. proof, Ex, KOSHA, NEPSI, CGA/AGA, FM Ex Div. 1 or 2, drinking water approval acc. to UBA assessment principles (PF36/PF39), impulse variant

Voltage
Further voltages

DTS 1000011015 EN Version: X Status: RL (released | freigegeben | valide) printed: 26.02.2026

valvesgo.com

ATEX/IECEx variant

Note:

- Max. switching frequency 20/min at max. medium temperature + 70 °C and max. ambient temperature + 40 °C
- Max. switching frequency 5/min at max. medium temperature + 90 °C and max. ambient temperature + 55 °C

Circuit function	Port connection	Nominal diameter	Flow coefficient water[1.) 2.)]	Pressure range[3.)]	Weight	Article no.	
						024 / AC/DC	230 / AC/DC
		[mm]	[m³/h]	[bar]	[kg]	[V/Hz]	[V/Hz]
With manual override and terminal box							
CF A 2/2-way solenoid valve Servo-controlled, with manual override Normally closed 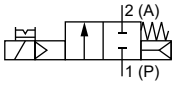 	**Brass body with threaded connection, seal material FKM**						
	G ½	13	4.0	0.5...10	1.1	355080	355093
	G ¾	20	6.5	0.5...10	1.5	355110	355098
	G 1	25	10.0	0.5...10	2.0	355096	355097
	G 1¼	32	20.0	0.5...10	2.7	o. r.	o. r.
	G 1½	40	20.0	0.5...10	3.2	355118	355088
	G 2	50	40.0	0.5...10	5.3	o. r.	o. r.
CF B 2/2-way solenoid valve Servo-controlled, with manual override Normally open 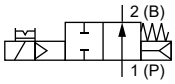 	**Stainless steel body with threaded connection, seal material FKM**						
	G ½	13	4.0	0.5...10	1.0	355087	355103
	G ½	20	5.0	0.5...10	1.5	355081	355085
	G ¾	20	6.5	0.5...10	1.5	355089	355092
	G 1	25	10.0	0.5...10	1.9	355084	355102
	G 1¼	32	20.0	0.5...10	2.4	o. r.	355107
	G 1½	40	20.0	0.5...10	2.8	370934	355111
	G 2	50	40.0	0.5...10	4.9	o. r.	o. r.
With manual override and cable outlet, cable 3 m							
CF A 2/2-way solenoid valve Servo-controlled, with manual override Normally closed 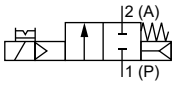 	**Brass body with threaded connection, seal material NBR**						
	G ½	13	4.0	0.5...10	1.0	349632	349634
	G ¾	20	6.5	0.5...10	1.5	349647	349648
	G 1	25	10.0	0.5...10	1.9	349627	349637
	G 1¼	32	20.0	0.5...10	2.7	349644	349649
	G 1½	40	20.0	0.5...10	3.1	349651	349652
	G 2	50	40.0	0.5...10	5.2	349635	349650
	G 2½	65	40.0	0.5...10	6.0	357536	349653
CF B 2/2-way solenoid valve Servo-controlled, with manual override Normally open 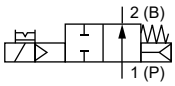 							

o. r. = on request

1.) Measurement at + 20 °C, 1 bar[2.)] at the valve inlet and free outlet

2.) A pressure difference of 0.5 bar is required to open the full cross-section.

3.) Pressure data: overpressure to atmospheric pressure

Further variants on request

Material
Seal material: NBR, FKM, EPDM

Pressure
Pressure range up to 16 bar

Voltage
110/UC

DTS 1000011015 EN Version: X Status: RL (released | freigegeben | valide) printed: 26.02.2026

valvesgo.com

8.5. Ordering chart accessories

Cable plug Type 2518, form A according to DIN EN 175301 - 803

Note:

- Dimensions in mm
- For further variants see data sheet **Type 2518** ▶.

Cable plug	Dimensions	Variant	Voltage	Article no.
	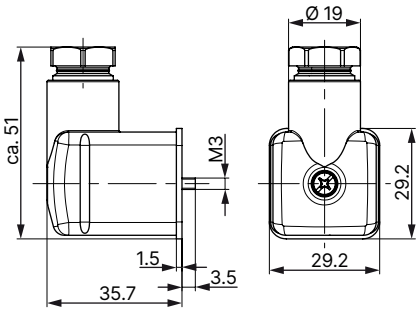	Without wiring (AC/DC)	0...250 V AC/DC	314802
		With LED (AC/DC)	12...24 V AC/DC	314812
		With LED and varistor (AC/DC)	12...24 V AC/DC	314820
		With rectifier, LED and varistor	12...24 V AC/DC	314816
		Without wiring (AC/DC) with silicone seal for higher ambient temperature, e.g. steam variant (NA07)	0...250 V AC/DC	361687

Cable plug Type 2509, form A according to DIN EN 175301 - 803

Note:

- Dimensions in mm
- Without wiring (standard)
- Refer to data sheet **Type 2509** ▶ for more information about the cable plug.

Cable plug	Dimensions	Variant	Voltage	Article no.
	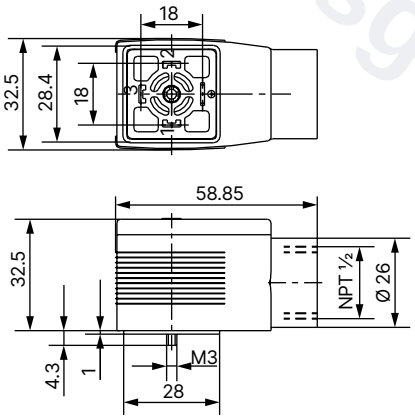	Without wiring	0...250 V AC/DC	137943

Cable glands for ATEX/IECEx terminal box

Note:

- A polyamide cable gland is included in the scope of delivery. A nickel-plated brass variant can be ordered for a surcharge.
- Refer to "7.1. Cable glands for ATEX/IECEx terminal box" on page 11 for more information about Ex cable glands.
- Refer to "7.2. Special tool to turn the terminal box" on page 12 for more information about Ex cable glands.

Description	Article no.
Ex cable gland, nickel-plated brass, 6...13 mm [1.)]	773278
Ex cable gland, polyamide, 7...13 mm [1.)]	773277
Set SC02-AC10: special tool [2.)] incl. service manual	293488

1.) Cable diameter
2.) Not included in the scope of delivery of the valve

DTS 1000011015 EN Version: X Status: RL (released | freigegeben | valide) printed: 26.02.2026

valvesgo.com