bürkert
FLUID CONTROL SYSTEMS

Type 5282

2/2-Way Solenoid Valve
2/2-Wege-Magnetventil
Électrovanne à 2/2 voies

Operating Instructions

Bedienungsanleitung
Manuel d'utilisation

MAN 1000310946 EN Version: FStatus: RL (released | freigegeben) printed: 06.08.2026

valvesgo.com

Contents

1 Operating Instructions 2
2 Authorized use 3
3 Basic safety instructions 3
4 Technical data 5
5 Installation 7
6 Maintenance, troubleshooting 13
7 Spare parts 14
8 Transport, Storage, Disposal 15

1 OPERATING INSTRUCTIONS

The operating instructions contain important information.

- Read the operating instructions carefully and follow the safety instructions in particular, and also observe the operating conditions.
- Operating instructions must be available to each user.
- The liability and warranty for the product / device are void if the operating instructions are not followed.

1.1 Symbols

- Designates an instruction to prevent risks.

→ designates a procedure which you must carry out.

Warning of injuries:

DANGER!
Imminent danger. Serious or fatal injuries.

WARNING!
Potential danger. Serious or fatal injuries.

CAUTION!
Danger. Minor or moderately severe injuries.

Warns of damage to property:

NOTE!

valvesgo.com

MAN 1000310946 EN Version: FStatus: RL (released | freigegeben) printed: 06.08.2026

valvesgo.com

2 AUTHORIZED USE

Non-authorized use of the solenoid valve type 5282 may be a hazard to people, nearby equipment and the environment.

- The device is designed to control, shut off and meter neutral media up to a viscosity of 21 mm^2/s.
- Provided the cable plug is connected and installed correctly, e.g. Bürkert type 2508, the device satisfies protection class IP65 in accordance with DIN EN 60529 / IEC 60529.
- During use observe the authorized data, the operating conditions and conditions of use specified in the contract documents, on the type label and in the operating instructions, as described in the chapter entitled “4 Technical data”.
- Correct transportation, correct storage and installation and careful use and maintenance are essential for reliable and faultless operation.
- Use the device only as intended.

2.1 Definition of term

In these operating instructions, the term “device” always refers to the Type 5282.

3 BASIC SAFETY INSTRUCTIONS

These safety instructions do not make allowance for any

- contingencies and events which may arise during the installation, operation and maintenance of the devices.
- local safety regulations - the operator is responsible for observing these regulations, also with reference to the installation personnel.

Danger - high pressure.

- Before loosening the pipes and valves, turn off the pressure and vent the pipes.

Risk of electric shock.

- Before reaching into the device or the equipment, switch off the power supply and secure to prevent reactivation.
- Observe applicable accident prevention and safety regulations for electrical equipment.

Risk of burns/risk of fire if used for a prolonged switch-on time through hot device surface.

- Keep the device away from highly flammable substances and media and do not touch with bare hands.

valvesgo.com

Risk of injury due to malfunction of valves with alternating current (AC).

Sticking core causes coil to overheat, resulting in a malfunction.

- Monitor process to ensure function is in perfect working order.

Risk of short-circuit/escape of media through leaking screw joints.

- Ensure seals are seated correctly.
- Carefully screw valve and connection lines together.

General hazardous situations.

To prevent injury, ensure that:

- The device may only be used in the explosion-protected area if an appropriate additional identification is attached to the type label. For use observe the additional information enclosed with the device together with safety instructions for the explosion risk area.
- The enclosed UL instructions must be followed in the UL area.
- Do not put any loads on the body (e.g. by placing objects on it or standing on it).
- Do not make any external modifications to the device bodies. Do not paint the body parts or screws.
- The system cannot be activated unintentionally.
- Installation and repair work may be carried out by authorized technicians only and with the appropriate tools.
- After an interruption in the power supply or fluid supply, ensure that the process is restarted in a defined or controlled manner.
- The device may be operated only when in perfect condition and in consideration of the operating instructions.

Type 5282 was developed with due consideration given to accepted safety rules and is state-of-the-art. Nevertheless, dangerous situations may occur.

3.1 Warranty

The warranty is only valid if the device is used as intended in accordance with the specified application conditions.

3.2 Information on the internet

The operating instructions and data sheets for type 5282 can be found on the internet at:

www.buerkert.com → Type 5282

valvesgo.com

MAN 1000310946 EN Version: FStatus: RL (released | freigegeben) printed: 06.08.2026

valvesgo.com

4 TECHNICAL DATA

4.1 Operating conditions

The following values* are indicated on the type label:

- **Voltage** (tolerance ± 10 %) / **current type**
- **Coil power consumption**
  (active power in W - at operating temperature)
- **Pressure range**
- **Body material** brass (MS) or stainless steel (VA)
- **Seal material** FKM, EPDM, NBR

* see description of type label below

Operating principle 2/2-way valve:

A (NC)

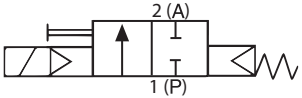

B (NO)

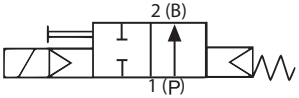

Type of protection: IP65 in accordance with DIN EN 60529 / IEC 60529
with correctly connected and installed device socket,
e.g. Bürkert Type 2508

4.2 Application conditions

Ambient temperature: max. +55 °C

The following values must also be observed for valves with UL/UR approval:

General Purpose Valve

Fluid	Temperature		Seal materials		
			FKM	NBR	EPDM
Dry air, inert gas	Fluid	[°F]	+32...+194	+32...+176	-13...+194
	Ambient	[°F]	+32...+131	+32...+131	-13...+131
	Fluid	[°C]	0...+90	0...+80	-25...+90
	Ambient	[°C]	0...+55	0...+55	-25...+55
Water	Fluid	[°F]	+41...+194	+41...+176	+41...+194
	Ambient	[°F]	+41...+131	+41...+131	+41...+131
	Fluid	[°C]	+5...+90	+5...+80	+5...+90
	Ambient	[°C]	+5...+55	+5...+55	+5...+55
Hazardous fluid: oil, LPG gas, oxygen	Fluid	[°F]	+32...+194		
	Ambient	[°F]	+32...+131		
	Fluid	[°C]	0...+90		
	Ambient	[°C]	0...+55		

valvesgo.com

Fire Protection Service Valve				
Fluid	Temperature		Seal materials	
			NBR	EPDM
Water	Fluid	[°F]	+41...+194	+41...+194
	Ambient	[°F]	+32...+131	+41...+131
	Fluid	[°C]	+5...+90	+5...+90
	Ambient	[°C]	0...+55	0...+55

Permitted medium temperature and permitted media depending on seal material:

Seal material	Medium temperature	Permitted media
FKM	0 °C ... +90 °C	Per-solutions, hot oils without additives, diesel and heating oil without additives, detergent solution
EPDM	-25 °C ... +90 °C	Oil and grease-free liquids, cold and hot water
NBR	0 °C ... +80 °C	Cold and warm water

Operating duration

Unless otherwise indicated on the type label, the solenoid system is suitable for continuous operation.

Important information for functional reliability during continuous operation: If standstill for a long period at least 1-2 activations per day are recommended.

Service life

High switching frequency and high pressures reduce the service life.

valvesgo.com

MAN 1000310946 EN Version: FStatus: RL (released | freigegeben) printed: 06.08.2026
valvesgo.com

4.3 Standards and directives

The appliance complies with the relevant EU harmonisation regulations. In addition, the device also fulfils the requirements of the laws of the United Kingdom.
On the respective current version of the EU Declaration of Conformity / UK Declaration of Conformity you will find the harmonised standards which were applied in the conformity assessment procedure.

UK CA UK - GL7 1QY Cirencester

UKCA marking with the address of the importer.

4.4 Type label

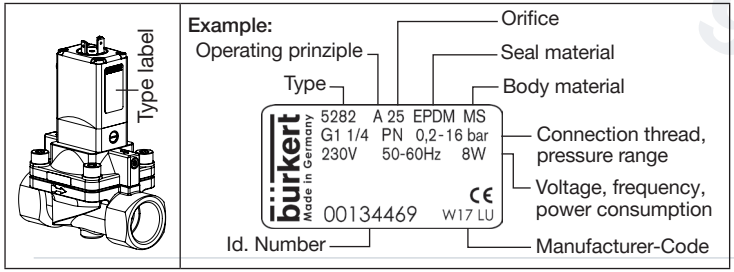

Fig. 1: Location and inscription of the type label

5 INSTALLATION

5.1 Safety instructions

DANGER!

Risk of injury from high pressure in the equipment.

- Before loosening the pipes and valves, turn off the pressure and vent the pipes.

Risk of injury due to electrical shock.

- Before reaching into the device or the equipment, switch off the power supply and secure to prevent reactivation.
- Observe applicable accident prevention and safety regulations for electrical equipment.

WARNING!

Risk of injury from improper installation.

- Installation may be carried out by authorized technicians only and with the appropriate tools.

Risk of injury from unintentional activation of the system and an uncontrolled restart.

- Secure system from unintentional activation.
- Following assembly, ensure a controlled restart.

valvesgo.com

5.2 Before installation

Installation position:

Installation can be in any position.
Preferably: Actuator upright.

→ Prior to installation check pipelines for dirt and, if required, clean.

Dirt filter: To ensure that the solenoid valve functions reliably, a dirt filter (≤ 500 µm) must be installed in front of the valve inlet.

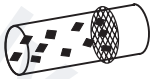

5.3 Installation

→ Hold the device with a suitable tool (open-end wrench) on the body and screw into the pipeline.

NOTE!

Caution risk of breakage.

- Do not use the coil as a lever arm.

→ Observe direction of flow:
The arrow on the body indicates the direction of flow (no function in opposite flow direction).

5.4 Manual emergency actuation

NOTE!

Caution!

- When the manual emergency actuation is locked, the valve can no longer be actuated electrically.

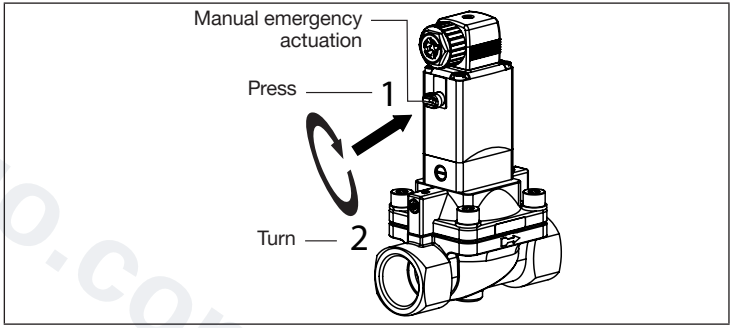

Fig. 2: Manual emergency actuation

valvesgo.com

MAN 1000310946 EN Version: FStatus: RL (released | freigegeben) printed: 06.08.2026
valvesgo.com

5.5 Changing valve function

(not possible for var Code CF02 and MT50)

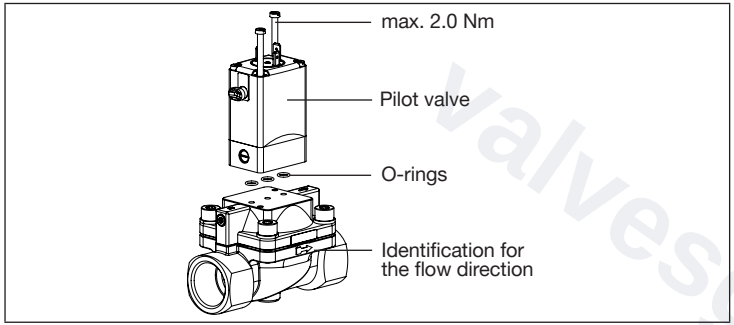

Fig. 3: Installing the pilot valve (changing valve function)

DANGER!

Discharge of medium due to leaking device.

If the O-rings are forgotten or incorrectly inserted during installation of the pilot valve, the device will be damaged and medium will be discharged.

- Before screwing in the pilot valve, correctly insert O-rings into the depressions.

Function NC

The pilot valve is installed in such a way that the manual emergency actuation points in the direction opposite to the direction of flow arrow.

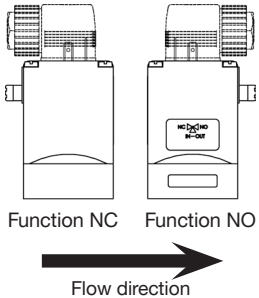

Function NO

The pilot valve is installed in such a way that the manual emergency actuation points in the same direction as the identification for the flow direction.

Fig. 4: Valve functions (NC/NO)

5.6 Setting the switching times

The closing and opening times of the valve can be changed if required with the side throttle screws.

NOTE!

Pressure surges caused by liquid media and short closing times.

- If closing times are fairly short, liquid media cause higher pressure surges. These may reduce the service life of the diaphragm and destroy other devices and components in the system.

valvesgo.com

CAUTION!

Discharge of medium if the throttle screws are unscrewed too far.

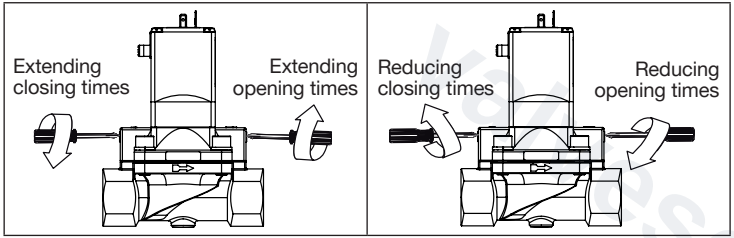

Fig. 5: Extending / reducing switching times

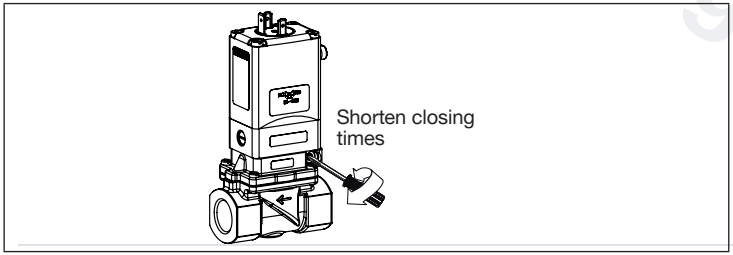

Fig. 6: Shorten closing times for DN13 stainless steel

5.7 Electrical connection of the cable plug

DANGER!

Risk of injury due to electrical shock.

- Before reaching into the device / equipment switch off the power supply and secure to prevent reactivation.
- Observe applicable accident prevention and safety regulations for electrical equipment.

If the protective conductor is not connected, there is a risk of electric shock.

- Always connect protective conductor and check electrical continuity coil and body.

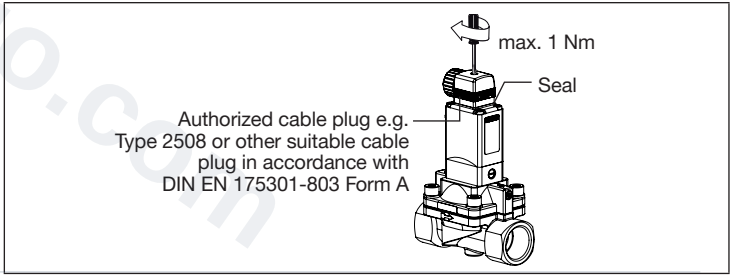

Fig. 7: Electrical connection of the cable plug

valvesgo.com

Note the voltage and current type as specified on the type label.

→ Tighten cable plug (for permitted types see data sheet), observing max. torque 1 Nm.

→ Check that seal is fitted correctly.

→ Connect protective conductor and check electrical continuity between coil and body.

5.7.1 Electrical connection - Pulse (CF 02)

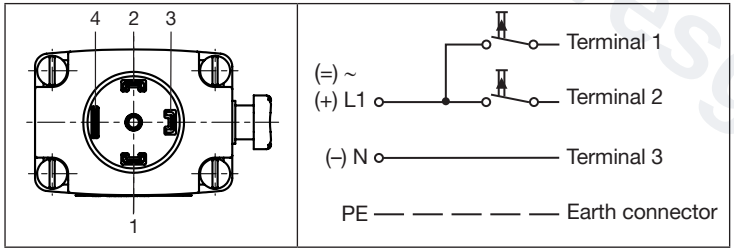

Fig. 8: Circuit diagram

The connection terminals in the device socket are identified with the numbers 1 to 3 according to the terminals on the valve.

Procedure:

→ Pulse valves (variable code CF 02) as in "Fig. 8: Circuit diagram" connect. Pulse to Terminal 1 closes the valve; pulse to Terminal 2 opens the valve.

→ Connect standard version L1/+ or N/– to Terminals 1 and 2 irrespective of the polarity.

NOTE!

Important information:

- Avoid emitting pulses simultaneously to both coil windings.
- Do not switch any other consumers (relays, etc.) at the same time as the terminals.
- The coil connection, to which voltage is not applied, must be galvanically isolated (open).
- If two or more valves are switched in parallel, ensure that this requirement is met by using 2-pole or multi-pole switches.

Electrical connection of the position indicator (var code LF02 or LF03) see operating instructions Type 1060.

valvesgo.com

5.7.2 Kick-and-drop-electronic variant (solenoid coil ACP016)

Information on the solenoid coil Type ACP016 can be found in the corresponding operating manual at www.burkert.com.

DANGER

If solenoid coils feature a terminal box, also observe the following:

- Insert permanently installed cables and lines only.
- Use a suitable cable and line entry. Observe specifications in the operating instructions ACP016.
- The terminals in the terminal box are intended for wires between 0.5 mm^2 and 2.5 mm^2.
- Tighten terminal screws to 0.25 Nm.
- Lock housing cover properly. Tighten lock screw to 2 Nm.
- Check continuity of the protective conductor connection.
- Before opening the housing cover, disconnect the power supply.
- Connect maximum two conductors to each terminal.

5.7.3 Solenoid coils with cable outlet

The connection cable is encapsulated with the solenoid coil Type ACP016 and cannot be removed.
Observe the indicated voltage according to the type label.

Wire assignment:

Wire color	Terminal assignment
green / yellow	Protective conductor
black	Phase / positive pole (+)
black	Neutral conductor / negative pole (–)

5.7.4 Solenoid coils with terminal box

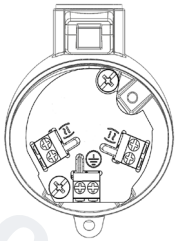

Position	Terminal assignment
⏚	Protective conductor
(≃)	Neutral conductor / negative pole (–)
(≃)	Phase / positive pole (+)

Fig. 9: Terminal box

valvesgo.com

MAN 1000310946 EN Version: FStatus: RL (released | freigegeben) printed: 06.08.2026

valvesgo.com

6 MAINTENANCE, TROUBLESHOOTING

6.1 Safety instructions

DANGER!

Risk of injury from high pressure in the equipment.

- Before loosening the pipes and valves, turn off the pressure and vent the pipes.

Risk of injury due to electrical shock.

- Before reaching into the device or the equipment, switch off the power supply and secure to prevent reactivation.
- Observe applicable accident prevention and safety regulations for electrical equipment.

WARNING!

Risk of injury from improper maintenance.

- Maintenance may be carried out by authorized technicians only and with the appropriate tools.

Risk of injury from unintentional activation of the system and an uncontrolled restart.

- Secure system from unintentional activation.
- Following maintenance, ensure a controlled restart.

6.2 Malfunctions

If malfunctions occur, check whether:

→ the device has been installed according to the instructions,
→ the electrical and fluid connections are correct,
→ the device is not damaged,
→ all screws have been tightened,
→ the voltage and pressure have been switched on,
→ the pipelines are clean.

Malfunction	Possible cause
Valve does not switch	Short-circuit or coil interrupted
	Medium pressure outside the permitted pressure range
	Manual emergency actuation locked
Valve does not close	Internal space of the valve is dirty
	Manual emergency actuation locked

NOTE!

Explosion protection versions may only be repaired by the manufacturer.

valvesgo.com

7 SPARE PARTS

CAUTION!

Risk of injury and/or damage by the use of incorrect parts!

Incorrect accessories and unsuitable spare parts may cause injuries and damage the device and the surrounding area.

- Use original accessories and original spare parts from Bürkert only.

7.1 Ordering spare parts

Replacement part sets

Order the spare-part set SET 3 or the pilot control with solenoid coil (complete) by quoting the identification number of the device.

- See replacement part sets “7.2 Exploded drawing”.
- The identification number of the device can be found on the type label. See also chapter “4.4 Type label”.

7.2 Exploded drawing

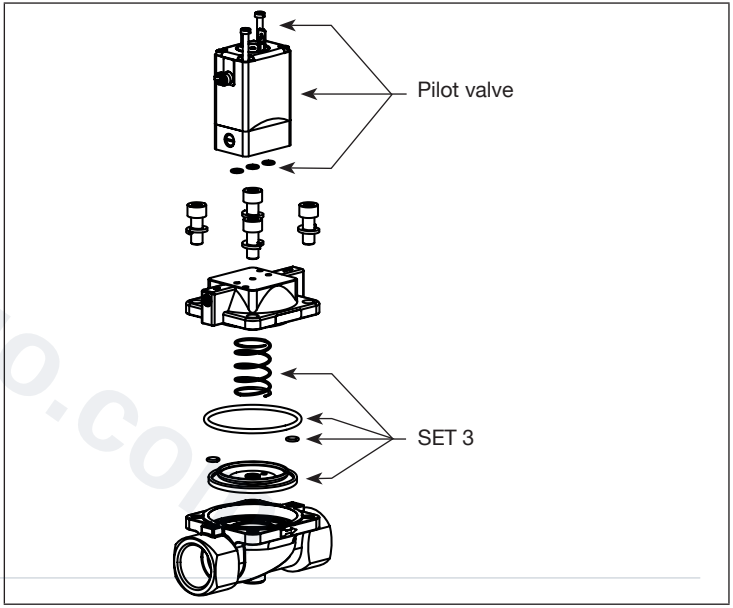

valvesgo.com

8 TRANSPORT, STORAGE, DISPOSAL

NOTE!

Transport damages.

Inadequately protected equipment may be damaged during transport.

- During transportation protect the device against wet and dirt in shock-resistant packaging.
- Avoid exceeding or dropping below the allowable storage temperature.

Incorrect storage may damage the device.

- Store the device in a dry and dust-free location!
- Storage temperature: -40 °C ... +80 °C

Environmentally compatible disposal

- Observe national waste disposal regulations and the environment.
- Collect electrical and electronic appliances separately and dispose of them specially.

Further information can be found on the Internet at
country.burkert.com

valvesgo.com

valvesgo.com

valvesgo.com

valvesgo.com

valvesgo.com

Bürkert Fluid Control Systems
Sales Center
Christian-Bürkert-Str. 13-17
D-74653 Ingelfingen
Tel. + 49 (0) 7940 - 10 91 111
Fax + 49 (0) 7940 - 10 91 448
E-mail: info@burkert.com

International address
www.burkert.com

Manuals and data sheets on the Internet: www.burkert.com
Bedienungsanleitungen und Datenblätter im Internet: www.buerkert.de
Instructions de service et fiches techniques sur Internet : www.buerkert.fr

© Bürkert Werke GmbH & Co. KG, 2015 - 2022
Operating Instructions 2209/25_EU-ML_00803322 / Original DE

MAN 1000310946 EN Version: FStatus: RL (released | freigegeben) printed: 06.08.2026

valvesgo.com