bürkert
FLUID CONTROL SYSTEMS

Direct-acting 2/2 or 3/2-way pivoted armature valve

- Direct-acting, media-separated valve up to nominal diameter DN 5
- Maintenance-free pivoted armature technology
- Vibration-proof, block screwed coil system
- Service-friendly, robust manual override
- Explosion-proof variants

Product variants described in the data sheet may differ from the product presentation and description.

Can be combined with

Type 1087
Timer,
form A according to
DIN EN 175301-803

Type 2518
Cable plug,
form A according to
DIN EN 175301-803

Type 2509
Cable plug,
form A according to
DIN EN 175301-803

Type description

The 0330 valve is a direct-acting, media-separated pivoted armature valve. It is available as a 2/2 and 3/2-way variant. As a 3/2-way variant, it can be used as a distributor or mixing valve. Various diaphragm materials and circuit functions are available depending on the actual application. The housing range consists of brass, stainless steel, PEEK and polypropylene. The solenoid coils are moulded with a chemically resistant epoxy. Since the coil system is separated from the medium by a diaphragm, the valve is especially suitable for critical media such as aggressive acids and alkalis. The 0330 is equipped with manual override for start-up and testing. To reduce energy demands, all the coils can be delivered with electronic power reduction or as an impulse variant. The switching status can be indicated via position feedback as a binary or NAMUR signal.

DTS 1000010828 EN Version: - Status: RL (released | freigegeben | valide) printed: 05.10.2026

© Christian Bürkert GmbH & Co. KG, Subject to alteration

Visit product website

valvesgo.com

Table of contents

1. General technical data 4

2. Circuit functions 6

3. Approvals and conformities 6

3.1. General notes 6
3.2. Conformity 6
3.3. Standards 6
3.4. Explosion protection 7
3.5. North America (USA/Canada) 7
3.6. Drinking water 7
3.7. Others 8
DNV GL classification 8

4. Materials 8

4.1. Bürkert resistApp 8
4.2. Material specifications 8

5. Dimensions 9

5.1. Standard variant 9
Metal body 9
Plastic body 10
Cable variant 11
5.2. Explosion-proof variant 12
Terminal box variant 12
Cable variant 13

6. Product connections 14

6.1. Port connection 14
Pin assignment standard variant 14
Pin assignment explosion-proof variant 14

7. Performance specifications 15

7.1. Pressure range and flow rate 15
Standard variant 15
Explosion-proof variant 16
Use in other circuit functions 16

8. Product accessories 17

8.1. Accessories standard variant 17
8.2. Accessories explosion-proof variant 17
8.3. Cable glands for ATEX/IECEx terminal box 18
8.4. Special tool to turn the terminal box 18

DTS 1000010828 EN Version: - Status: RL (released | freigegeben | valide) printed: 05.10.2026

valvesgo.com

valvesgo.com

9. Ordering information 19

9.1. Bürkert eShop 19
9.2. Bürkert product filter 19
9.3. Bürkert Product Enquiry Form 19
9.4. Ordering chart 20
Standard variant 20
Explosion-proof variant 22
9.5. Ordering chart accessories 23
Cable plug Type 2518, form A according to DIN EN 175301 - 803 23
Cable plug Type 2509, form A according to DIN EN 175301 - 803 23
Cable glands for ATEX/IECEx terminal box 23
Mounting plate complete for DIN rail mounting 24
Circlip 24

DTS 1000010828 EN Version: - Status: RL (released | freigegeben | valide) printed: 05.10.2026

valvesgo.com

valvesgo.com

1. General technical data

Product properties	
Dimensions	Further information can be found in chapter "5. Dimensions" on page 9.
Material	
Seal	EPDM FKM FFKM NBR
Body	Brass Stainless steel (1.4401) PP (Polypropylene) PVDF (on request) PEEK
Material resistance	Further information can be found in chapter "4.1. Bürkert resistApp" on page 8.
Weight	
Standard variant	Metal body: 0.45 kg Plastic body: 0.30 kg
Explosion-proof variant	Metal body: 0.75 kg Plastic body: 0.60 kg
Orifice	DN 2...DN 5
Circuit function	A, B, C, D, E, F and T Further information can be found in chapter "2. Circuit functions" on page 6.
Thermal insulation class of solenoid coil	Epoxy coil class H
Performance data	
Duty cycle	
With brass, stainless steel and PEEK	100 % continuous operation
With PP and PVDF	40 % duty cycle (60 % intermittent operation) in 30 min for 8 W variant 100 % continuous operation for 5 W variant
Switching frequency (explosion-proof variant)	Medium temperature up to + 70 °C: max. 20/min Medium temperature up to + 90 °C: max. 5/min
Switching time [1.] standard variant	
Frequency AC	Opening: 8...15 ms Closing: 8...15 ms
Frequency DC	Opening: 10...20 ms Closing: 10...20 ms
Switching time [1.] explosion-proof variant	
Orifice DN 2...DN 4	Opening: 30 ms Closing: 40 ms
Electrical data	
Power consumption standard	
Frequency AC	Inrush: 30 VA Hold: 15 VA Hold: 8 W
Frequency DC	Cold: 11 W Warm: 8 W
Power consumption Impulse (inrush winding)	
Frequency AC	Hold: 20 VA Hold: 11 W
Frequency DC	Cold: 11 W Warm: 8 W
Power consumption explosion-proof variant	
Frequency AC/DC	Inrush: 40 W Hold: 3 W

DTS 1000010828 EN Version: - Status: RL (released | freigegeben | valide) printed: 05.10.2026

valvesgo.com

Voltage	
Standard variant	24 V 50 Hz, 110 V 50 Hz, 230 V 50 Hz, 120 V 60 Hz, 240 V 60 Hz, 12 V DC, 24 V DC (further voltages on request)
Explosion-proof variant	24 V, 230 V (further voltages on request)
Voltage tolerance	± 10 %
Medium data	
Operating medium	
With NBR	Neutral mediums such as compressed air, town gas, water, hydraulic oil, oils and greases without additives, oxygen
With EPDM	Alkalis, acids to medium concentrations, alkaline washing and bleaching lyes
With FKM	Oxydizing acids and substances, hot oils with additives, salt solutions, waste gases, oxygen
With FFKM	Aggressive mediums, hot air, hot oils
All Materials	Further information can be found in chapter **"4.1. Bürkert resistApp" on page 8**
Medium temperature	
With body material brass, stainless steel or PEEK	NBR: 0 °C...+ 80 °C EPDM: - 30 °C...+ 90 °C FKM: 0 °C...+ 90 °C FFKM: + 5 °C...+ 90 °C
With body material PP	NBR: 0 °C...+ 80 °C EPDM: - 30 °C...+ 80 °C FKM: 0 °C...+ 80 °C FFKM: + 5 °C...+ 80 °C
Viscosity	Max. 37 mm²/s
Product connections	
Electrical connection	
Standard variant	• Plug contacts according to DIN EN 175 301 - 803 form A for cable plug **Type 2518** ▸ Further information can be found in chapter **"Cable plug Type 2518, form A according to DIN EN 175301 - 803" on page 23**. • Plug contacts according to DIN EN 175 301 - 803 form A for cable plug **Type 2509** ▸ (Also available with moulded cable on request.) Further information can be found in chapter **"Cable plug Type 2509, form A according to DIN EN 175301 - 803" on page 23**.
Explosion-proof variant	Moulded cable Terminal box without safety fuse (Information about ACP016 see operating manual.)
Port connection	G ¼, NPT ¼, (RC ¼ and G ⅛ on request, G ⅛ not possible for PP and PEEK)
Approvals and conformities	
Degree of protection	
Standard variant	IP65 with cable plug
Explosion-proof variant	IP65
Explosion protection	Further information can be found in chapter **"3.4. Explosion protection" on page 7**.
North America (USA/Canada)	Further information can be found in chapter **"3.5. North America (USA/Canada)" on page 7**.
Drinking water	Further information can be found in chapter **"3.6. Drinking water" on page 7**.
Others	Further information can be found in chapter **"3.7. Others" on page 8**.
Environment and installation	
Installation position	As required, preferably with actuator upright
Ambient temperature	
Standard variant	Max. + 55 °C
Explosion-proof variant	Max. + 55 °C

1.) Measurement at + 20 °C, 6 bar at the valve outlet, opening: pressure build-up 0...90 %, closing: pressure reduction 100...10 %

DTS 1000010828 EN Version: - Status: RL (released | freigegeben | valide) printed: 05.10.2026

valvesgo.com

2. Circuit functions

Symbol	Description
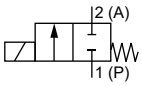	**Circuit function A (CF A)** 2/2-way solenoid valve Direct-acting Normally closed
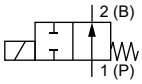	**Circuit function B (CF B)** 2/2-way solenoid valve Direct-acting Normally open
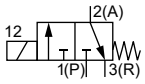	**Circuit function C (CF C)** 3/2-way solenoid valve Direct-acting Normally closed
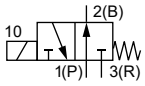	**Circuit function D (CF D)** 3/2-way solenoid valve Direct-acting Normally open
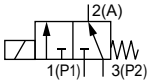	**Circuit function E (CF E)** 3/2-way mixing valve (solenoid valve)
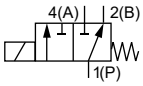	**Circuit function F (CF F)** 3/2-way distribution valve (solenoid valve) Direct-acting
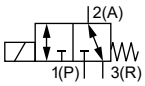	**Circuit function T (CF T)** 3/2-way solenoid valve Direct-acting Flow direction optional Normally closed

3. Approvals and conformities

3.1. General notes

- The approvals and conformities listed below must be stated when making enquiries. This is the only way to ensure that the product complies with all required specifications.
- Not all available variants can be supplied with the below mentioned approvals or conformities.

3.2. Conformity

In accordance with the Declaration of Conformity, the product is compliant with the EU Directives.

3.3. Standards

The applied standards which are used to demonstrate compliance with the EU Directives are listed in the EU-Type Examination Certificate and/or the EU Declaration of Conformity.

DTS 1000010828 EN Version: - Status: RL (released | freigegeben | valide) printed: 05.10.2026

valvesgo.com

3.4. Explosion protection

Approval	Description
	Optional: Explosion protection according to category 2 (zone 1/21) Ex marking of the components according to the following table:

Coil Type ACP016	
Coils with cable outlet	**Coils with terminal box**
ATEX: EPS 16 ATEX 1 111 X II 2G Ex mb IIC T4 Gb II 2D Ex mb IIIC T130 °C Db **IECEx:** IECEx EPS 16.0049X Ex mb IIC T4 Gb Ex mb IIIC T130 °C Db	**ATEX:** EPS 16 ATEX 1 111 X II 2G Ex eb mb IIC T4 Gb II 2D Ex mb tb IIIC T130 °C Db **IECEx:** IECEx EPS 16.0049X Ex eb mb IIC T4 Gb Ex mb tb IIIC T130 °C Db

3.5. North America (USA/Canada)

Approval	Description
LISTED	**Optional (valid for valves): UL Listed for the USA** The valves are UL Listed for the USA according to: • UL 429 (electrically operated valves) and UL 429A (Electrically Operated Valves for Fire Protection Service)
c UL us LISTED SOLENOID FOR USE IN HAZARDOUS LOCATIONS E504714	**Optional (valid for coils): UL Hazardous Locations – Explosion Protection** UL Listed for Hazardous Locations for USA and Canada Class I, Zone 1 Class I, Division 2, Group A, B, C and D Class II + III, Division 2, Group F and G
	Optional (valid for valves): UL Recognized for the USA The valves are UL Recognized for the USA according to: • UL 429 (electrically operated valves) and UL 429A (Electrically Operated Valves for Fire Protection Service)
	Optional (valid for valves): CSA for Canada The valves are CSA approved for Canada according to: • CSA 139 (electrically operated valves)
FM c us APPROVED	**Optional (valid for coils): FM (Factory Mutual) – Explosion Protection** FM for Hazardous Locations for USA and Canada Class I, Zone 1 Class I, Division 1, Groups A, B, C and D Class II + III, Division 1, Groups E, F and G

3.6. Drinking water

Conformity	Description
H_2O	**Suitable for use in drinking water applications** The materials comply with the assessment principles (UBA) for materials in contact with drinking water (Trinkwasserv). PF39: Suitable for products with a maximum temperature of + 85 °C (hot water) PF36: Suitable for products with a maximum temperature of + 60 °C (warm water) PF40: Suitable for products with a maximum temperature of + 23 °C (cold water)

DTS 1000010828 EN Version: - Status: RL (released | freigegeben | valide) printed: 05.10.2026

valvesgo.com

3.7. Others

DNV GL classification

Approval	Description
TYPE APPROVED PRODUCT DNV DNV.COM/AF	**DNV GL classification – Ships, offshore units, and high speed and light craft** The products are accepted for installation on all vessels classed by DNV GL.

4. Materials

4.1. Bürkert resistApp

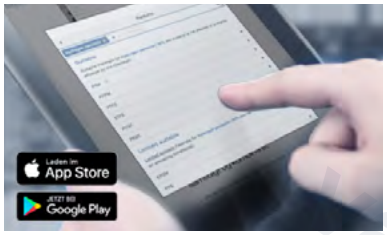

Bürkert resistApp – Chemical resistance chart

You want to ensure the reliability and durability of the materials in your individual application case? Verify your combination of media and materials on our website or in our resistApp.

Start chemical resistance check

4.2. Material specifications

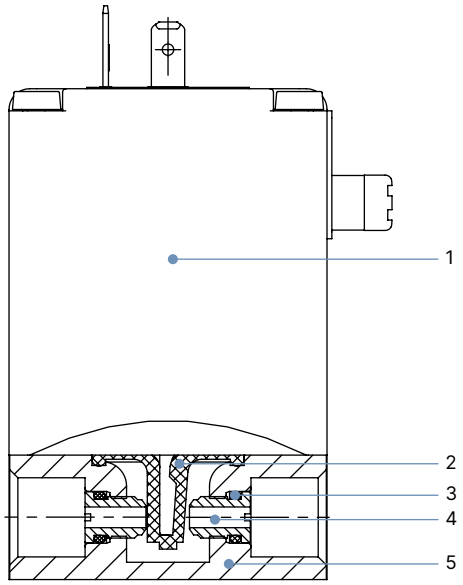

No.	Element	Material
1	Coil	Epoxy
2	Diaphragm	EPDM, FKM, FFKM, NBR
3	O-ring	EPDM, FKM, FFKM, NBR
4	Seat	Brass Stainless steel (1.4401) PP (Polypropylene) PEEK
5	Valve body	Brass Stainless steel (1.4401) PP (Polypropylene) PEEK

DTS 1000010828 EN Version: - Status: RL (released | freigegeben | valide) printed: 05.10.2026

valvesgo.com

5. Dimensions

5.1. Standard variant

General notes:

- The dimensions D1 and L1 apply to G thread.
- The dimensions D2 and L2 apply to NPT thread.
- The device can be attached via the existing holes on the bottom side. The hole pattern is 38×24. For metal bodies, use M4 screws. For plastic bodies, use either self-tapping screws or a body with metric thread inserts (variable codes ACxx or ADxx). The screw-in depth must be observed. Refer to **operating instructions Type 0330** ▸ for more information.
- The dimensions of the cable plug Type 2518 can be found in chapter **"Cable plug Type 2518, form A according to DIN EN 175301 - 803" on page 23**.
- The dimensions of the cable plug Type 2509 can be found in chapter **"Cable plug Type 2509, form A according to DIN EN 175301 - 803" on page 23**.

Metal body

Note:

- Dimensions in mm
- For metal bodies, the minimum thread length at the middle connection is 7.5 mm.
- Screw-in depth of G ¼ connection threads: When using pipe fittings, select variants with G ⅛, as the screw-in depth with G ¼ is not sufficient.
- See the general notes at the beginning of chapter **"5.1. Standard variant" on page 9**.

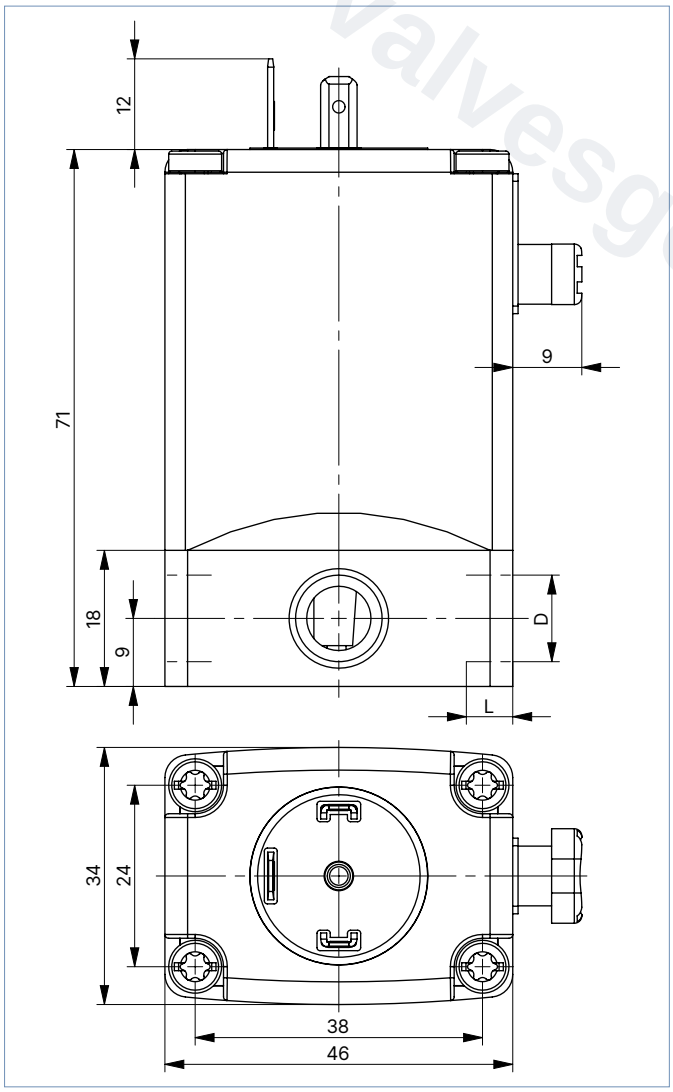

D1	L1	D2	L2
G ⅛	9	–	–
G ¼	9	NPT ¼	7.5

DTS 1000010828 EN Version: - Status: RL (released | freigegeben | valide) printed: 05.10.2026

valvesgo.com

valvesgo.com

DTS 1000010828 EN Version: - Status: RL (released | freigegeben | valide) printed: 05.10.2026

Plastic body

Note:

- Dimensions in mm
- See the general notes at the beginning of chapter "5.1. Standard variant" on page 9.

PP (Polypropylene)	PEEK
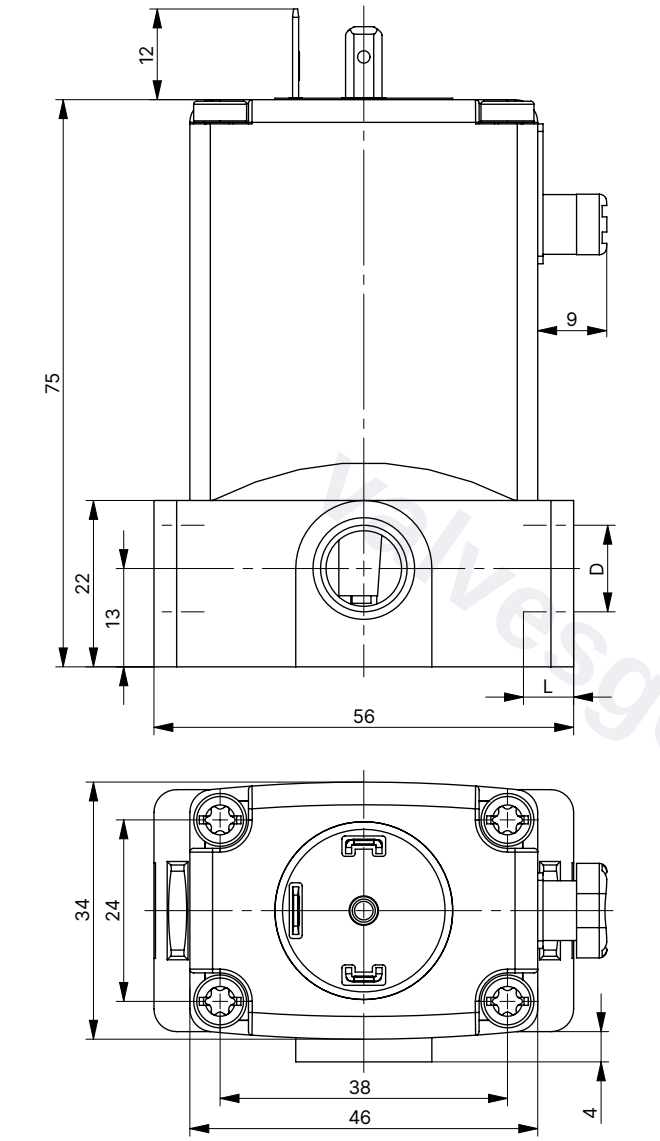	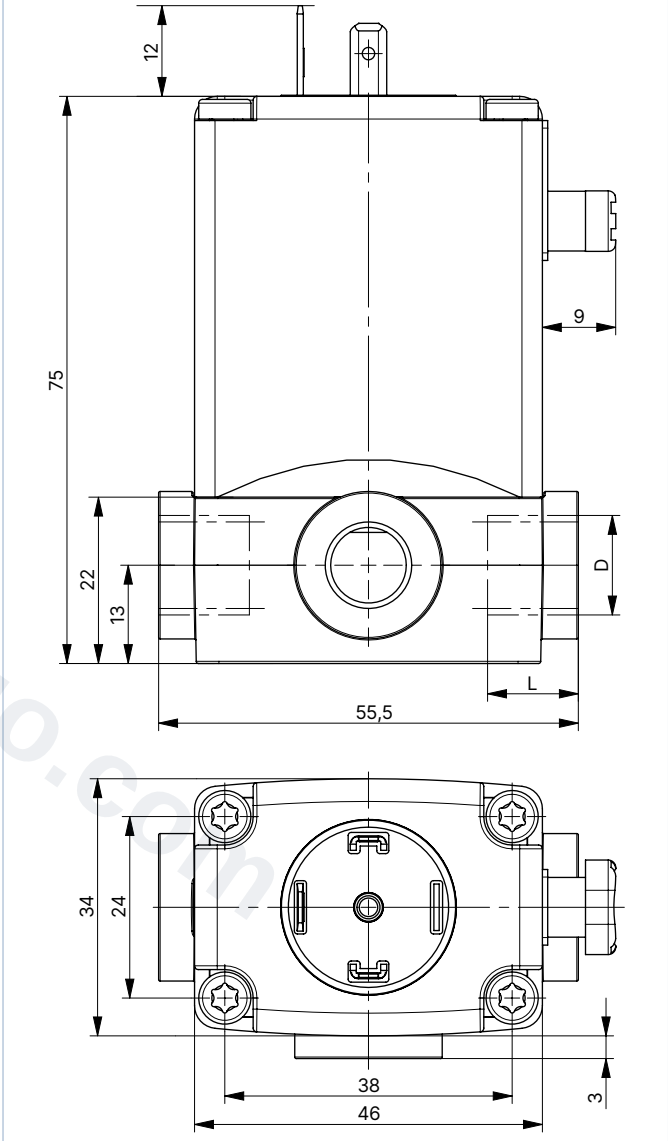

D	L
G ¼	12
NPT ¼	11

valvesgo.com

Cable variant

Note:

- Dimensions in mm
- See the general notes at the beginning of chapter "5.1. Standard variant" on page 9.

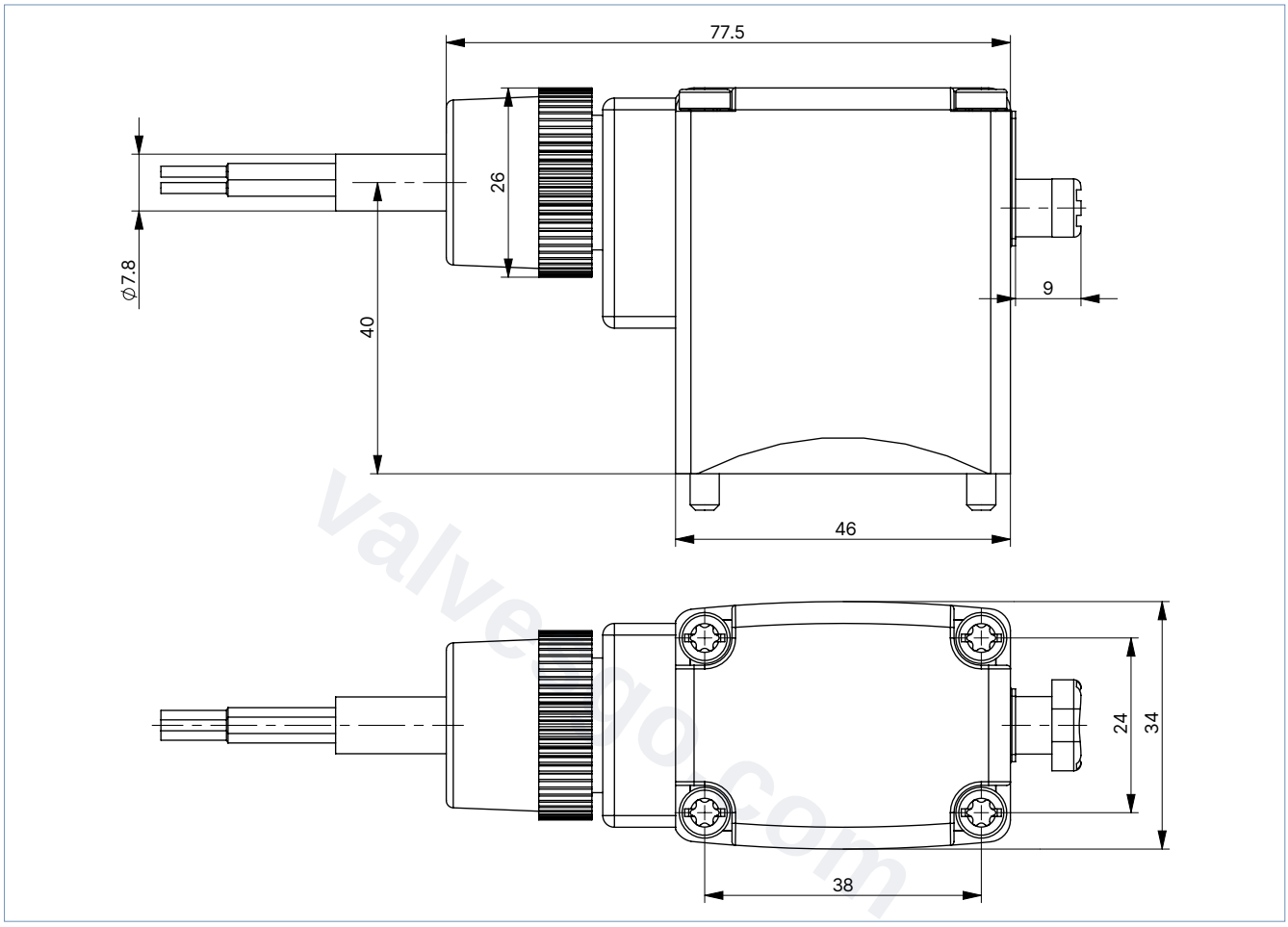

DTS 1000010828 EN Version: - Status: RL (released | freigegeben | valide) printed: 05.10.2026

valvesgo.com

5.2. Explosion-proof variant

Terminal box variant

Note:

- Dimensions in mm
- The dimensions D1 and L1 apply to G thread.
- The dimensions D2 and L2 apply to NPT thread.

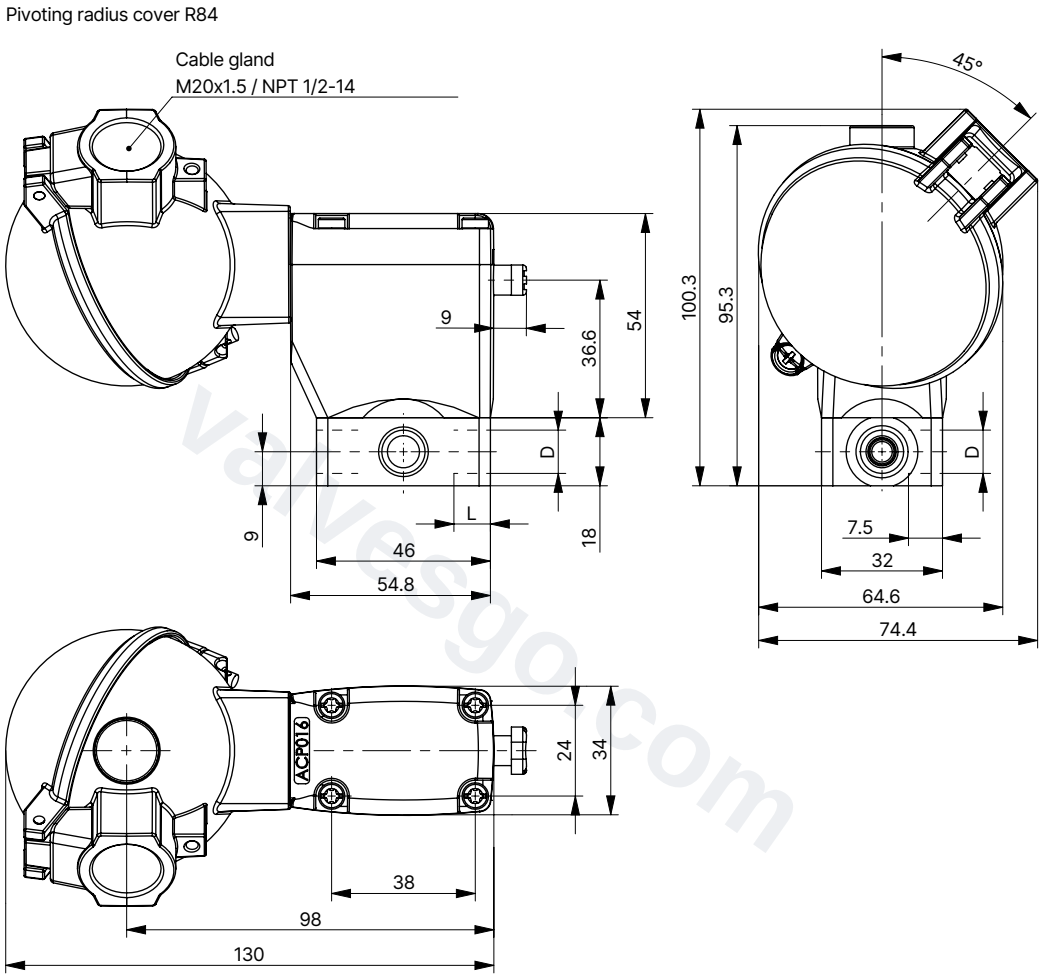

D1	L1	D2	L2
G ⅛	9	–	–
G ¼	9	NPT ¼	7.5

DTS 1000010828 EN Version: - Status: RL (released | freigegeben | valide) printed: 05.10.2026

valvesgo.com

Cable variant

Note:
Dimensions in mm

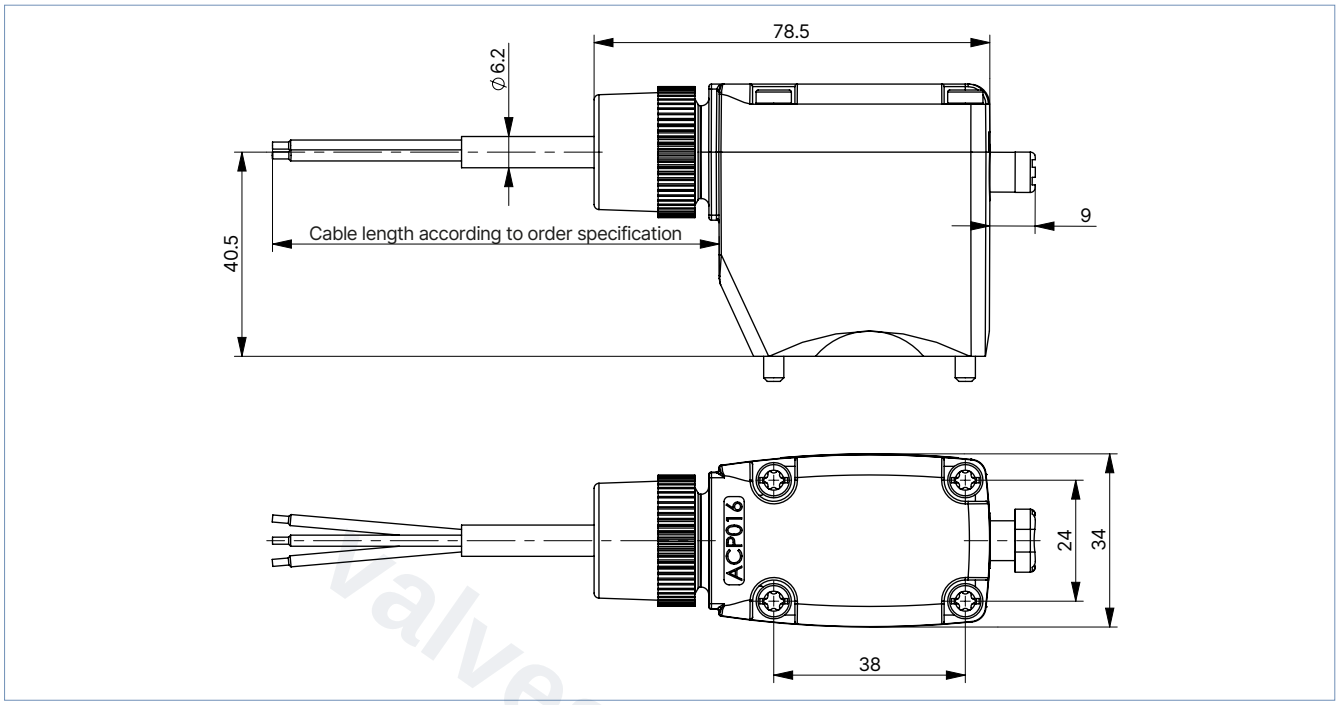

DTS 1000010828 EN Version: - Status: RL (released | freigegeben | valide) printed: 05.10.2026

valvesgo.com

6. Product connections

6.1. Port connection

Pin assignment standard variant

Note:
The pin assignment (marked No. 1, 2 and 3 in the drawing) depends on the circuit function. In the table, compare the respective pin assignment with the corresponding circuit function.

Circuit function	Connection 1	Connection 2	Connection 3	2-way	3-way
A	P	A	–	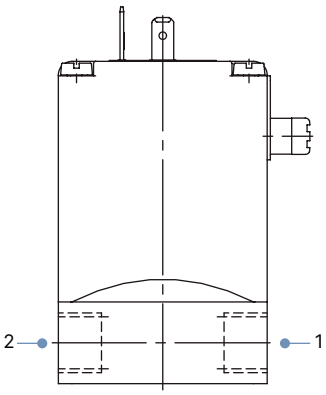	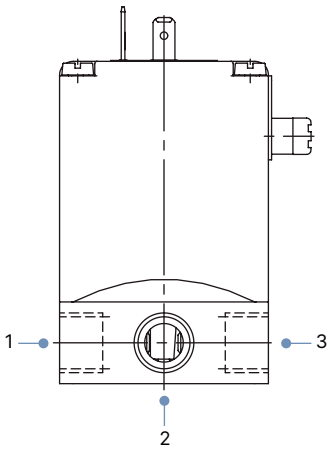
B	B	P	–		
C	P	A	R		
D	R	B	P		
E	P1	A	P2		
F	A	P	B		
T	NC	IN/OUT	NO		

Pin assignment explosion-proof variant

Note:
The pin assignment (marked No. 1, 2 and 3 in the drawing) depends on the circuit function. In the table, compare the respective pin assignment with the corresponding circuit function.

Circuit function	Connection 1	Connection 2	Connection 3	2-way	3-way
A	P	A	–	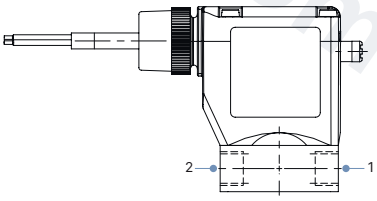	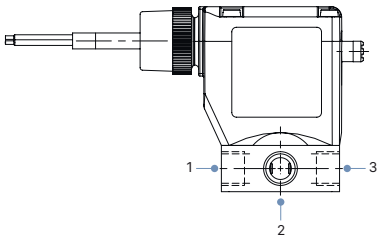
B	B	P	–		
C	P	A	R		
D	R	B	P		
E	P1	A	P2		
F	A	P	B		
T	NC	IN/OUT	NO		

DTS 1000010828 EN Version: - Status: RL (released | freigegeben | valide) printed: 05.10.2026

valvesgo.com

valvesgo.com

7. Performance specifications

7.1. Pressure range and flow rate

Standard variant

Note:
Refer to "Use in other circuit functions" on page 16 for more information about use in other circuit function.

Circuit function	DN	K_V value water [1.)]		Pressure range [2.)]		
		DC	AC (50 or 60 Hz)	Standard [3.)]	Vacuum [4.)]	Impulse [5.)]
		[m³/h]	[m³/h]	[bar]	[bar]	[bar]
Metal body						
A / B / C / D / F	2	0.08	0.11	0...16 [6.)]	- 0.98...10	0...16 [6.)]
	3	0.14	0.18	0...10	- 0.98...6	0...10
	4	0.17	0.23	0...5	- 0.98...3	0...5
	5	0.29	0.29	0...2.5	- 0.98...1	0...2.5
E	2	0.08	0.11	0...10	- 0.98...8	0...10
	3	0.14	0.18	0...6	- 0.98...5	0...6
	4	0.17	0.23	0...3	- 0.98...2.5	0...3
	5	0.29	0.29	0...1.5	- 0.98...1	0...1
T	2	0.08	0.11	0...12	- 0.98...8	0...10
	3	0.14	0.18	0...8	- 0.98...5	0...6
	4	0.17	0.23	0...4	- 0.98...2.5	0...5
	5	0.29	0.29	0...2.5	- 0.98...1	–

Circuit function	DN	K_V value water [7.)]	Pressure range [2.)]			
			Standard [3.)] AC [50 or 60 Hz]	Standard [3.)] DC	Vacuum [4.)]	Impulse [5.)]
		[m³/h]	[bar]	[bar]	[bar]	[bar]
Plastic body						
A / B / C / D / F	2	0.13	0...16 [6.) 8.)]	0...12 [8.)]	- 0.98...10	0...12 [8.)]
	3	0.25	0...10	0...8	- 0.98...6	0...8
	4	0.30	0...5	0...4	- 0.98...3	0...4
	5	0.40	0...4.5	0...3	- 0.98...1	0...3
E / T	2	0.13	0...10	0...7	- 0.98...7	0...7
	3	0.25	0...6	0...4	- 0.98...5	0...4
	4	0.30	0...3	0...2	- 0.98...2.5	0...2
	5	0.40	0...2	0...1	- 0.98...0.5	0...1

1.) For frequency 56, the K_V values of the DC variant apply
2.) Pressure data: overpressure to atmospheric pressure (deviating pressure range for 5 W variant)
3.) Heat output 8 W
4.) Vacuum possible for all seal materials
5.) Starting power 11 W
6.) The maximum medium pressure is 12 bar for seal material FKM and FFKM.
7.) The K_V value at DC frequency is reduced by up to 10 % to guarantee the function.
8.) The maximum operating pressure is 10 bar for industry material PVDF.

DTS 1000010828 EN Version: - Status: RL (released | freigegeben | valide) printed: 05.10.2026

valvesgo.com

Explosion-proof variant

Note:
Refer to "Use in other circuit functions" on page 16 for more information about use in other circuit function.

Circuit function	DN	K_V value water	Pressure range 1.) 2.)	
			Standard	Vacuum
		[m³/h]	[bar]	[bar]
Metal body				
A / B / C / D / F	2.0	0.11	0...16	-0.98...10
	3.0	0.18	0...10	-0.98...6
	4.0	0.23	0...5	-0.98...3
	5.0	0.29	0...4	-0.98...2.5
E	2.0	0.11	0...10	-0.98...8
	3.0	0.18	0...6	-0.98...5
	4.0	0.23	0...3.5	-0.98...2.5
	5.0	0.29	0...3	-0.98...2
T	2.0	0.11	0...10	-0.98...8
	3.0	0.18	0...6	-0.98...5

1.) Devices with FKM and/or FFKM diaphragms are reduced to a maximum pressure of 12 bar.
2.) Pressure data: overpressure to atmospheric pressure

Circuit function	DN	K_V value water	Pressure range 1.) 2.)	
			Standard	Vacuum
		[m³/h]	[bar]	[bar]
Plastic body				
A / B / C / D / F	2.0	0.13	0...16 3.)	-0.98...10
	3.0	0.25	0...10	-0.98...6
	4.0	0.30	0...5	-0.98...3
	5.0	0.40	0...4.5	-0.98...1
E / T	2.0	0.13	0...10	-0.98...7
	3.0	0.25	0...6	-0.98...5
	4.0	0.30	0...3	-0.98...2.5

1.) Devices with FKM and/or FFKM diaphragms are reduced to a maximum pressure of 12 bar.
2.) Pressure data: overpressure to atmospheric pressure
3.) The maximum operating pressure is 10 bar for industry material PVDF.

Use in other circuit functions

The compression springs installed in the valves differ depending on the circuit function. When used in other circuit functions, the permissible operating pressure changes according to the following table.

Note:
The following table applies to both the standard variant and the explosion-proof variant.

Circuit function	Max. operating pressure [bar] when using the valve in a new circuit function																	
	Orifice DN 2						Orifice DN 3						Orifice DN 4					
	A 1.)	B 1.)	C	D	E	F	A	B	C	D	E	F	A	B	C	D	E	F
Metal body (8 W respectively 11 W)																		
C	16	1.5	16	1.5	1.5	16	10	1	10	1	1	10	5	0.8	5	0.8	0.8	5
D	4	16	4.5	16	4	4	2.5	10	2.5	10	2	3	2	5	2	5	2	2
T	8	8	10	10	10	8	6	6	6	6	6	6	3	3	3	3	3	3
Plastic body (8 W respectively 11 W)																		
C	16	1.5	16	1.5	1.5	16	10	1	10	1	1	10	5	0.8	5	0.8	0.8	5
D	4	16	4.5	16	4	4	2.5	10	2.5	10	2	3	2	5	2	5	2	2
F	16	1.5	10	1.5	1.5	16	6	1	6	1	1	10	4	1	4	1	1	5

1.) For circuit function A and B, the valve must be connected according to the pin assignment of 3/2-way valve.

DTS 1000010828 EN Version: - Status: RL (released | freigegeben | valide) printed: 05.10.2026

valvesgo.com

8. Product accessories

8.1. Accessories standard variant

Option	Variable code	Description
Impulse variant	CF02	Bistable magnetic system with inrush and drop-off coil; continuous operation or operation with short current pulses (min. 150 ms) possible
Oxygen variants	NL02	Suitable for applications with oxygen (non-metal materials that are in contact with the medium, are tested and approved according to BAM)
Increased purity requirements, e.g. oil-free, grease-free and silicone-free	NL50/ NL05	Wetted parts are specially cleaned and packaged in accordance with the valves
Increased tightness requirements	PCxx	Standard devices are tested at 10^{-2} mbar x l/s; up to 10^{-6} mbar is possible
Electrical feedback	LF02/ LF03	See **Type 1060** ▶. Function as opener, closer or toggle switch depending on the connection (no IP65 achievable)
High-performance electronics	CZ05	Inrush power 60 W, nominal holding current 3 W; with plastic variants 100 % duty cycle is now feasible
Vacuum variant	NA02	Suitable for vacuums up to - 0.98 bar
Increased purity and tightness requirements	NA03	Wetted parts are specially cleaned and leak tested to 10^{-4} mbar x l/sec
Increased purity and tightness requirements and vacuum variant	NA01	Wetted parts are specially cleaned and leak tested up to 10^{-4} mbar x l/sec and suited for vacuum up to - 0.98 bar
Coil with reduced power (5 W)	–	The devices have a lower pressure range; 100% duty cycle is possible with plastic variants
Cable plug	JHxx/ JGxx/ JFxx	A cable plug is part of the delivery. Cable plug variants (according to DIN EN 175301 - 803 form A), see separate data sheet **Type 2518** ▶ and **Type 2509** ▶
Approvals	PD01	CSA General Purpose valve
	PD02	UR (UL Recognized)/CSA approval
	PD07	DNV-GL (formerly Germanischer Lloyd)
	PR05	cFMus approved coil Class I, Division 1, Groups A, B, C and D - T4 Class II, Division 1, Groups E, F and G - T4 Class III, Division 1 - T4 Class I, Zone 1, AEx mb IIC T4 Gb, Zone 21 AEx mb IIIC T130 °C Db Ex mb IIC T4 Gb; Ex mb IIIC T130 °C Db
	PE95	UL (UL Listed) approval
	PU15	UL Listed for Hazardous Locations for USA and Canada, Class I, Zone 1, AEx eb mb IIC T4; Zone 21, AEx mb tb IIIC T130 °C / Class I, Div 2, Group A,B,C,D; Class II+III, Div 2, Group F,G
	PX41	EPS 16 ATEX 1111 X/IECEx EPS 16.0049X, 2G T4 IIC/2D T130 °C IIIC, Tamb - 40 °C...+ 60 °C, single and block mounting
Possible conformities (depending on the assembly)	–	EAC, drinking water, FDA

8.2. Accessories explosion-proof variant

Option	Variable code	Description
Oxygen variants	NL02	Suitable for applications with oxygen (non-metal materials that are in contact with the medium, are tested and approved according to BAM)
Increased purity requirements, e.g. oil-free, grease-free and silicone-free	NL50/ NL05	Wetted parts are specially cleaned and packaged in accordance with the valves
Increased hermetic requirements	PCxx	Standard devices are tested at 10^{-2} mbar x l/s; up to 10^{-6} mbar is possible
Vacuum variant	NA02	Suitable for vacuums up to - 0.98 bar
Increased purity and hermetic requirements	NA03	Wetted parts are specially cleaned and leak tested to 10^{-4} mbar x l/sec
Increased purity and hermetic requirements and vacuum variant	NA01	Wetted parts are specially cleaned and leak tested up to 10^{-4} mbar x l/sec and suited for vacuum up to - 0.98 bar
Electrical feedback	CF15	Coil with intrinsically safe proximity switches (PTB 00 ATEX 2048X) instead of manual override

DTS 1000010828 EN Version: - Status: RL (released | freigegeben | valide) printed: 05.10.2026

valvesgo.com

8.3. Cable glands for ATEX/IECEx terminal box

Note:
A polyamide cable gland is included in the scope of delivery. A nickel-plated brass variant can be ordered for a surcharge, see **"Cable glands for ATEX/IECEx terminal box" on page 23**.

Description	Ex approval		Dimensions	
	Certification	Identification		
Ex cable gland, nickel-plated brass, 6...13 mm 	PTB 04 ATEX 1112 X, IECEx PTB 13.0027X	II 2 G Ex e IIC Gb, II 2 D Ex tb IIIC Db IP68	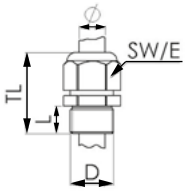	TL 29...37 mm L 6 mm D 20 mm SW 24 mm E 27 mm
Ex cable gland, polyamide, 7...13 mm 	PTB 13 ATEX 1015 X, IECEx PTB 13.0034X	II 2 G Ex e IIC Gb, II 2 D Ex tb IIIC Db IP68	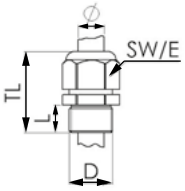	TL 36...45 mm L 10 mm D 20 mm SW 24 mm E 28 mm

8.4. Special tool to turn the terminal box

Note:
This special tool is not included in the scope of delivery of the valve, see **"Cable glands for ATEX/IECEx terminal box" on page 23**.

Description	Components of the set
Set SC02-AC10 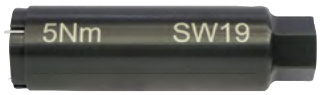	• Special tool • Service manual

DTS 1000010828 EN Version: - Status: RL (released | freigegeben | valide) printed: 05.10.2026

valvesgo.com

valvesgo.com

9. Ordering information

9.1. Bürkert eShop

Bürkert eShop – Easy ordering and quick delivery

You want to find your desired Bürkert product or spare part quickly and order directly? Our online shop is available for you 24/7. Sign up and enjoy all the benefits.

Order online now

9.2. Bürkert product filter

Bürkert product filter – Get quickly to the right product

You want to select products comfortably based on your technical requirements?
Use the Bürkert product filter and find suitable articles for your application quickly and easily.

Try out our product filter

9.3. Bürkert Product Enquiry Form

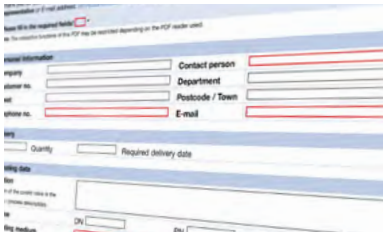

Bürkert Product Enquiry Form – Your enquiry quickly and compactly

Would you like to make a specific product enquiry based on your technical requirements? Use our Product Enquiry Form for this purpose. There you will find all the relevant information for your Bürkert contact. This will enable us to provide you with the best possible advice.

Fill out the form now

DTS 1000010828 EN Version: - Status: RL (released | freigegeben | valide) printed: 05.10.2026

valvesgo.com

9.4. Ordering chart

Standard variant

Note:

- All devices have a G ¼ port connection, manual override and cable plug **Type 2518** ▶.
- Other variants are available on request.
- Articles with reduced delivery time

Circuit function	Orifice [mm]	Body or seat material	Seal material	Article no. 024/DC [V/Hz]	Article no. 024/50 [V/Hz]	Article no. 230/50 [V/Hz]
CF A [1.)] 2/2-way solenoid valve Direct-acting Normally closed 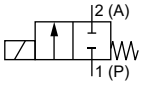	2.0	PEEK	FKM	o. r.	o. r.	o. r.
			EPDM	o. r.	o. r.	o. r.
			FFKM	o. r.	o. r.	o. r.
	3.0	Brass	FKM	020293	022883	124909
			NBR	020294	086553	024902
		Stainless steel	FKM	020292	023984	024563
		PP	FKM	018410	088496	045653
			EPDM	067214	022105	062398
		PEEK	FKM	o. r.	o. r.	o. r.
			EPDM	o. r.	o. r.	o. r.
			FFKM	o. r.	o. r.	o. r.
	4.0	Brass	FKM	024019	025246	124912
			NBR	025084	–	046007
		Stainless steel	FKM	018276	018857	020873
		PP	FKM	062695	043005	063116
			EPDM	021660	067731	063118
		PEEK	FKM	o. r.	o. r.	o. r.
			EPDM	o. r.	o. r.	o. r.
			FFKM	o. r.	o. r.	o. r.
	5.0	PP	FKM	062624	067007	022619
			EPDM	061321	054261	049969
CF B [1.)] 2/2-way solenoid valve Direct-acting Normally open 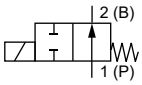	3.0	Brass	FKM	141917	130146	141919
		Stainless steel	FKM	141928	141929	141931
	4.0	Brass	FKM	141920	141921	141923
		Stainless steel	FKM	141932	141933	141935
CF C 3/2-way solenoid valve Direct-acting Normally closed 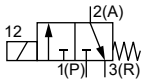	2.0	Brass	NBR	041103	042129	041105
		PEEK	FKM	o. r.	o. r.	o. r.
			EPDM	o. r.	o. r.	o. r.
			FFKM	o. r.	o. r.	o. r.
	3.0	Brass	NBR	041107	041108	041116
		Stainless steel	FKM	052344	045024	052059
		PEEK	FKM	o. r.	o. r.	o. r.
			EPDM	o. r.	o. r.	o. r.
			FFKM	o. r.	o. r.	o. r.
	4.0	Brass	NBR	042218	042695	042329
		Stainless steel	FKM	050483	043324	050979
		PP	FKM	–	088420	–
			EPDM	–	–	063625
		PEEK	FKM	o. r.	o. r.	o. r.
			EPDM	o. r.	o. r.	o. r.
			FFKM	o. r.	o. r.	o. r.

DTS 1000010828 EN Version: - Status: RL (released | freigegeben | valide) printed: 05.10.2026

valvesgo.com

Circuit function	Orifice	Body or seat material	Seal material	Article no.		
				024/DC	024/50	230/50
	[mm]			[V/Hz]	[V/Hz]	[V/Hz]
CF D 3/2-way solenoid valve Direct-acting Normally open 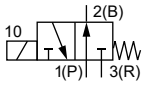	2.0	Brass	NBR	056984	041858	041137
	3.0	Brass	NBR	041139	041141	041147
	4.0	Brass	NBR	043129	042696	042903
CF E 3/2-way mixing valve (solenoid valve) 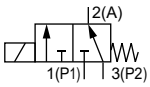	3.0	PP	FKM	069917	066230	022294
			EPDM	078556	–	078559
	4.0	PP	FKM	061077	086921	053406
			EPDM	067160	044693	066033
CF F 3/2-way distribution valve (solenoid valve) Direct-acting 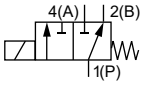	4.0	PP	FKM	020528	–	–
			EPDM	–	–	066032
CF T 3/2-way solenoid valve Direct-acting Flow direction optional Normally closed 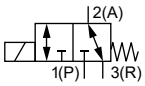	2.0	Brass	FKM	124922	138316	124925
		Stainless steel	FKM	124932	124933	124935
		PEEK	FKM	o. r.	o. r.	o. r.
			EPDM	o. r.	o. r.	o. r.
			FFKM	o. r.	o. r.	o. r.
	3.0	Brass	FKM	124927	124928	124930
		Stainless steel	FKM	124937	124938	124940
		PEEK	FKM	o. r.	o. r.	o. r.
			EPDM	o. r.	o. r.	o. r.
			FFKM	o. r.	o. r.	o. r.

o. r. = on request
– = not available
1.) The listed article numbers and circuit functions have a body with straight pass.

DTS 1000010828 EN Version: - Status: RL (released | freigegeben | valide) printed: 05.10.2026

valvesgo.com

Explosion-proof variant

Note:

- All devices have a G ¼ port connection and manual override.
- Other variants are available on request.

Circuit function	Orifice [mm]	Body or seat material	Seal material	Electrical connection	Article no. 024 / AC/DC [V/Hz]	Article no. 230 / AC/DC [V/Hz]
CF A [1.)] 2/2-way solenoid valve Direct-acting Normally closed 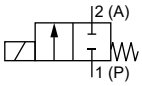	3.0	Brass	NBR	Terminal box	353707	353708
				Cable	353616	353617
		Stainless steel	FKM	Terminal box	353709	353710
				Cable	353618	353619
CF C 3/2-way solenoid valve Direct-acting Normally closed 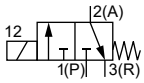	3.0	Brass	NBR	Terminal box	353594	353695
				Cable	353596	353599
		Stainless steel	FKM	Terminal box	353700	353706
				Cable	353614	353615
CF E 3/2-way mixing valve (solenoid valve) 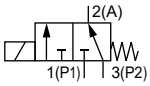	3.0	Stainless steel	FKM	Terminal box	353712	353702
				Cable	353620	353621
CF F 3/2-way distribution valve (solenoid valve) Direct-acting 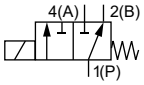	3.0	Stainless steel	FKM	Terminal box	394337	353713
				Cable	353622	353623
	4.0	Stainless steel	FKM	Terminal box	353697	–
				Cable	353646	–

– = not available

1.) The listed article numbers and circuit functions have a body with straight pass.

DTS 1000010828 EN Version: - Status: RL (released | freigegeben | valide) printed: 05.10.2026

valvesgo.com

valvesgo.com

9.5. Ordering chart accessories

Cable plug Type 2518, form A according to DIN EN 175301 - 803

Note:

- Dimensions in mm
- For further variants see data sheet **Type 2518** ▶.

Cable plug	Dimensions	Variant	Voltage	Article no.
	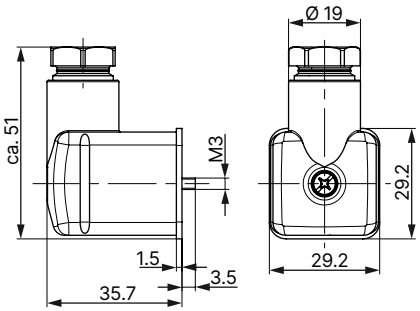	Without wiring (AC/DC)	0...250 V AC/DC	314802
		With LED (AC/DC)	12...24 V AC/DC	314812
		With LED and varistor (AC/DC)	12...24 V AC/DC	314820
		With rectifier, LED and varistor	12...24 V AC/DC	314816

Cable plug Type 2509, form A according to DIN EN 175301 - 803

Note:

- Dimensions in mm
- Without wiring (standard)
- Refer to data sheet **Type 2509** ▶ for more information about the cable plug.

Cable plug	Dimensions	Variant	Voltage	Article no.
	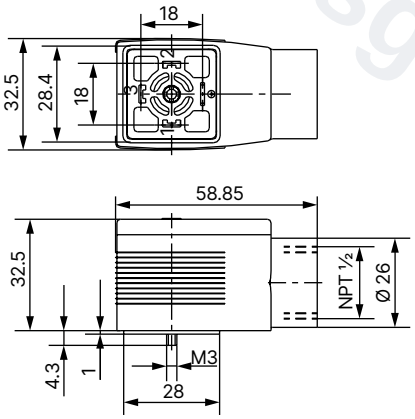	Without wiring	0...250 V AC/DC	137943

Cable glands for ATEX/IECEx terminal box

Note:

- A polyamide cable gland is included in the scope of delivery. A nickel-plated brass variant can be ordered for a surcharge.
- Refer to **"8.3. Cable glands for ATEX/IECEx terminal box" on page 18** for more information about Ex cable glands.
- Refer to **"8.4. Special tool to turn the terminal box" on page 18** for more information about special tool.

Description	Article no.
Ex cable gland, nickel-plated brass, 6...13 mm [1.)]	773278
Ex cable gland, polyamide, 7...13 mm [1.)]	773277
Set SC02-AC10: special tool [2.)] incl. service manual	293488

1.) Cable diameter
2.) Not included in the scope of delivery of the valve

DTS 1000010828 EN Version: - Status: RL (released | freigegeben | valide) printed: 05.10.2026

valvesgo.com

Mounting plate complete for DIN rail mounting

Description	Article no.
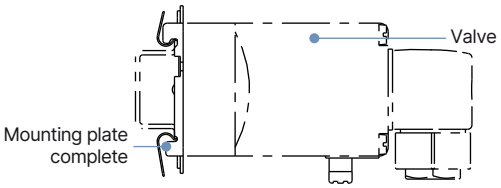	013253

Circlip

Description	Article no.
Circlip to prevent inadvertent manual actuation 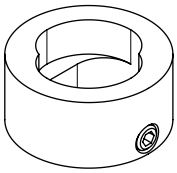	013372

DTS 1000010828 EN Version: - Status: RL (released | freigegeben | valide) printed: 05.10.2026

valvesgo.com

valvesgo.com