bürkert
FLUID CONTROL SYSTEMS

2/2-way diaphragm valve with pneumatic stainless steel actuator (Type ELEMENT) for decentralised automation

- Valve body and diaphragm are available in various materials and variants
- Wetted surfaces from Ra ≤ 0.38 µm...≤ 1.6 µm (optionally electropolished)
- Available in all common connection sizes and variants

Product variants described in the data sheet may differ from the product presentation and description.

Can be combined with

Type SV02
Diaphragms

Type 2034
Multifunction block solutions

Type 8691
Control head for decentralised automation of ELEMENT process valves

Type 8692
Digital electropneumatic positioner for integrated mounting on process control valves

Type 8695
Control head for decentralised automation of ELEMENT process valves

Type 8696
Digital electropneumatic positioner for integrated mounting on process control valves

Type 8098
FLOWave SAW flowmeter

Type description

The externally controlled diaphragm valve Type 2103 consists of a pneumatically operated piston actuator, a diaphragm and a 2-way valve body. The proven and robust actuator with stainless steel housing ensures use in hygienic or aggressive ambient conditions. The flow-efficient valve bodies with little dead space enable high flow rates and a wide range of possible uses. The valve body and the diaphragm are available in all common materials and variants. The actuator has a compact, autoclavable design with a large stainless steel housing and gap-free seals. The integration of automation units Type ELEMENT is possible in all configuration levels (can be retrofitted); a fieldbus interface can also be integrated. An explosion-proof ATEX/IECEx device variant is available.

It is a compact, smooth-surfaced and highly integrated system consisting of a valve and an automation unit with integrated pilot air ducts (no intake of ambient air). The add-on body is optionally available in plastic or stainless steel (can be rotated 360°). The valve offers the degrees of protection IP65/67 and NEMA Type 4X and displays high chemical resistance.

DTS 1000450597 EN Version: S Status: RL (released | freigegeben | valide) printed: 01.06.2026

© Christian Bürkert GmbH & Co. KG, Subject to alteration

valvesgo.com

Table of contents

1. General technical data 3

2. Control functions 5

3. Approvals and conformities 6

3.1. General notes 6
3.2. Conformity 6
3.3. Standards 6
3.4. Explosion protection 6
3.5. Foods and beverages/Hygiene 6
3.6. Others 7

4. Materials 7

4.1. Bürkert resistApp 7
4.2. Pressure temperature diagram for plastic valve body 7
4.3. Material specifications 8
4.4. Example of available diaphragm materials 9

5. Dimensions 10

5.1. Actuator 10
ELEMENT actuator 10
5.2. Forged steel valve body (VS) with welded connection 11
5.3. Forged steel valve body (VS) with clamp connection 13
5.4. Tube valve body (VP) with welded connection 15
5.5. Tube valve body (VP) with clamp connection 16
5.6. Tube valve body (VP) with threaded connection 17
5.7. Tube valve body (VP) with flange connection 18
5.8. Cast valve body (VG) with welded connection 19
5.9. Cast valve body (VG) with clamp connection 21
5.10. Plastic valve body (PV, PP, PD) with spigot connection 22
5.11. Plastic valve body (PW, PV, PP, PD) with true union 24
5.12. Plastic valve body (PV, PP, PD) with flange connection 27

6. Performance specifications 29

6.1. Flow characteristics 29
Forged steel valve body (VS) 29
Tube valve body (VP) 31
Cast valve body (VG) 32
Plastic valve body (PW, PV, PP, PD) 32
6.2. Medium pressure 33

7. Product accessories 34

8. Networking and combination with other Bürkert products 38

8.1. Possible combinations 38
For ELEMENT valve system Type 8802-DF with TopControl 38
For ELEMENT valve system Type 8802-DF with SideControl Remote 39
For ELEMENT valve system Type 8801-DF with control head or pneumatic control unit/position feedback 40

9. Ordering information 41

9.1. Bürkert eShop 41
9.2. Bürkert product filter 41
9.3. Bürkert Product Enquiry Form 41

DTS 1000450597 EN Version: S Status: RL (released | freigegeben | valide) printed: 01.06.2026

valvesgo.com

valvesgo.com

1. General technical data

Product properties	
Dimensions	Further information can be found in chapter "5. Dimensions" on page 10.
Material	
Forged steel valve body (VS) [1.]	Forged stainless steel 1.4435 in accordance with BN2 DIN EN 1022 - 5, F316L in accordance with to ASTM, A182/A182M and 316L in accordance with to ASME BPE
Tube valve body (VP) [1.]	Stainless steel tube 1.4435-BN2 / UNS S31603 (316L) according to DIN 11866, ASTM A269 / A270, DIN EN 10217 - 7 / 10216 - 5
Cast valve body (VG) [1.]	Stainless steel precision casting 1.4435 / 316L
Plastic valve body (PW, PV, PP, PD) [1.]	PVC-C, PVC-U, PP, PVDF
Diaphragm	EPDM (AD) [1.], PTFE/EPDM (EA) [1.], Advanced PTFE/EPDM (EU) [1.], laminate of GYLON® and EPDM (ER) [1.]
Actuator	DN 08...65, PPS DN 65...100, stainless steel 1.4308
Actuator casing	DN 08...65, stainless steel 1.4561 (316Ti) DN 65...100, stainless steel 1.4308
Diaphragm size	8...100, for plastic body 15...100
Standard surface quality	
Forged steel valve body (VS) [1.]	Internally electrically polished: Ra ≤ 0.38 µm (NO17) [1.] (ASME BPE SF4 / DIN HE4) (externally forged surface, electrically polished) Internally mechanically polished: Ra ≤ 0.5 µm (NO14) [1.] (ASME BPE SF1) (externally forged surface)
Tube valve body (VP) [1.]	Internally electrically polished: Ra ≤ 0.38 µm (NO17) [1.] (ASME BPE SF4 / DIN HE4) (externally electrically polished) Internally glass bead blasted: Ra ≤ 1.6 µm (NO05) [1.] (externally glass bead blasted (NO01) [1.])
Cast valve body (VG) [1.]	Internally electrically polished: Ra ≤ 0.6 µm (NO16) [1.] (ASME BPE SF6) (externally cast surface, electrically polished) Internally mechanically polished: Ra ≤ 0.76 µm (NO06) [1.] (ASME BPE SF3 / DIN H2) (externally cast surface)
Performance data	
Maximum pilot pressure (SF A)	10 bar 7 bar for actuator size 130, 225 See "6.2. Medium pressure" on page 33
Pilot air port	Push-in connector for outer diameter, Ø 6 mm or ¼" (standard), thread G ⅛"
Medium data	
Operating medium	Neutral gases and liquids, highly purified, sterile, aggressive or abrasive mediums (see **resistance chart** ▶)
Medium temperature	
EPDM (AD) [1.]	- 10...+ 143 °C (steam sterilisation + 150 °C for 60 min)
PTFE/EPDM (EA) [1.]	- 10...+ 130 °C (steam sterilisation + 140 °C for 60 min)
Advanced PTFE/EPDM (EU) [1.]	- 5...+ 143 °C (steam sterilisation + 150 °C for 60 min)
Laminate of GYLON® and EPDM (ER) [1.]	- 5...+ 130 °C (steam sterilisation + 140 °C for 60 min)
Plastic body	See "4.2. Pressure temperature diagram for plastic valve body" on page 7
Control medium	Neutral gases, air

DTS 1000450597 EN Version: S Status: RL (released | freigegeben | valide) printed: 01.06.2026

valvesgo.com

Product connections	
Port connection [2.)]	
Nominal diameter	DN 06...DN 100 (⅛"...4")
Stainless steel body [3.)]	
Welded connection [2.)]	DIN EN ISO 1127 / ISO 4200 / DIN 11866 series B DIN 11850 - 2 / DIN 11866 series A / DIN EN 10357 series A ASME BPE / DIN 11866 series C
Clamp connection [2.)]	DIN 32676 series A (DIN pipe) DIN 32676 series B (ISO pipe) ASME BPE
Plastic body	
Spigot connection	DN 15...DN 50
True union	DN 15...DN 50
Loose flange	DN 15...DN 65
Fixed flange	DN 80...DN 100
Environment and installation	
Installation position	See **operating manual Type 2103** ▸
Ambient temperature	- 10...+ 60 °C [5.)], autoclavable

1.) This information is part of the product key (see "9.3. Bürkert Product Enquiry Form" on page 41).
2.) Further variants are available on request.
3.) The tube valve body (VP) is also available with flange and threaded connection.
4.) With plastic housings, a temperature limitation due to housing material is possible.
5.) For standard variant, variants with higher temperatures possible

DTS 1000450597 EN Version: S Status: RL (released | freigegeben | valide) printed: 01.06.2026

valvesgo.com

valvesgo.com

2. Control functions

Symbol	Description
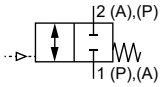	**Control function A (CF A)** Pneumatically operated 2/2-way on/off valve Bidirectional Normally closed by spring force
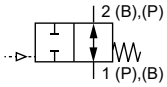	**Control function B (CF B)** Pneumatically operated 2/2-way on/off valve Bidirectional Normally opened by spring force
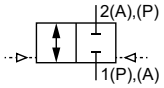	**Control function I (CF I)** Pneumatically operated 2/2-way on/off valve on either side Bidirectional Switching position dependent on external control
3-position actuator	
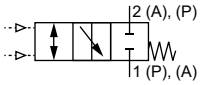	**Control function A (CF A)** Pneumatically operated 2/3-way position valve Bidirectional Normally closed by spring force

DTS 1000450597 EN Version: S Status: RL (released | freigegeben | valide) printed: 01.06.2026

valvesgo.com

valvesgo.com

3. Approvals and conformities

3.1. General notes

- The approvals and conformities listed below must be stated when making enquiries. This is the only way to ensure that the product complies with all required specifications.
- Not all available variants can be supplied with the below mentioned approvals or conformities.

3.2. Conformity

In accordance with the Declaration of Conformity, the product is compliant with the EU Directives.

3.3. Standards

The applied standards which are used to demonstrate compliance with the EU Directives are listed in the EU-Type Examination Certificate and/or the EU Declaration of Conformity.

3.4. Explosion protection

Approval	Description
	Optional: Explosion protection (valid for the variable code PX51) As a category 2 device suitable for zone 1/21 and zone 2/22. **ATEX:** EPS 18 ATEX 2 008 X II 2G Ex h IIC T4...T2 Gb II 2D Ex h IIIC T135 °C...T300 °C Db **IECEx:** IECEx EPS 18.0007X Ex h IIC T4...T2 Gb Ex h IIIC T135 °C...T300 °C Db

Temperature class	T2	T3	T4
Maximum surface temperature	+ 300 °C	+ 200 °C	+ 135 °C
Ambient temperature	- 40...+ 130 °C	- 40...+ 130 °C	- 40...+ 100 °C
Maximum medium temperature	+ 285 °C	+ 185 °C	+ 125 °C

Note: The ambient and medium temperature range may be limited by non-ex-relevant specifications. Observe the Operating Instructions.

3.5. Foods and beverages/Hygiene

Conformity	Description
	3-A Sanitary Standards Inc. (valid for the variable code PE05) The products comply with 3-A Sanitary Standards Inc (3-A SSI) as per certificate.
FDA	**FDA – Code of Federal Regulations** The diaphragms made of EPDM (AD), PTFE/EPDM (EA), Advanced PTFE/EPDM (EU) and laminate of GYLON® and EPDM (ER) comply with the Code of Federal Regulations published by the FDA (Food and Drug Administration, USA).
USP	**United States Pharmacopeial Convention (USP)** The diaphragms made of EPDM (AD), PTFE/EPDM (EA), Advanced PTFE/EPDM (EU) and laminate of GYLON® and EPDM (ER) are tested according to USP Class VI.
	EC Regulation 1935/2004 of the European Parliament and of the Council The diaphragms made of EPDM (AD), PTFE/EPDM (EA), Advanced PTFE/EPDM (EU) and laminate of GYLON® and EPDM (ER) are suitable for use with food and beverages (according to EC Regulation 1935/2004/EC).

DTS 1000450597 EN Version: S Status: RL (released | freigegeben | valide) printed: 01.06.2026

valvesgo.com

3.6. Others

Conformity	Description
TA Luft	Technical instruction on air quality control (valid for the variable code PM01)

4. Materials

4.1. Bürkert resistApp

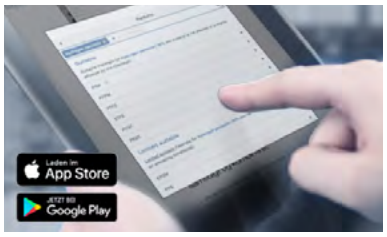

Bürkert resistApp – Chemical resistance chart

You want to ensure the reliability and durability of the materials in your individual application case? Verify your combination of media and materials on our website or in our resistApp.

Start chemical resistance check

4.2. Pressure temperature diagram for plastic valve body

Note:
This information is important for material selection. Observe the permissible operating pressure depending on the medium temperature.

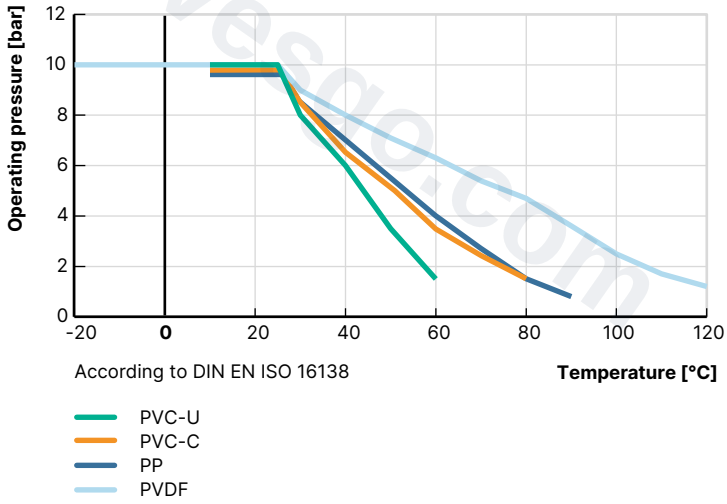

DTS 1000450597 EN Version: S Status: RL (released | freigegeben | valide) printed: 01.06.2026

valvesgo.com

4.3. Material specifications

Note:
The exemplary representation may differ from the actual product.

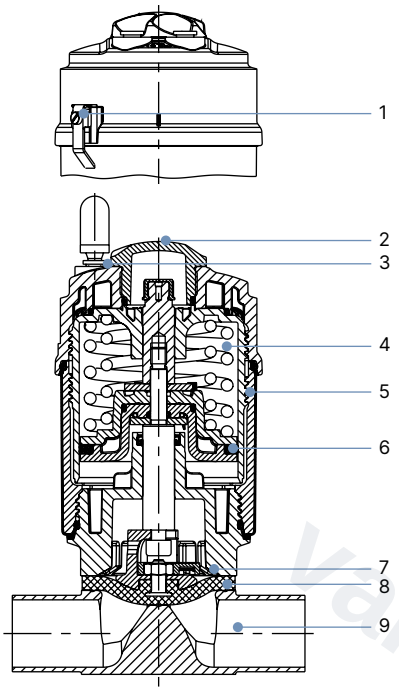

No.	Element	Material
1	Ground terminal	Stainless steel 1.4301/1.4305 (only for ATEX/IECEx variant)
2	Transparent cap	Polysulfone PSU
3	Pilot air ports	Push-in connector PP (standard), Thread G ⅛" stainless steel 1.4305
4	Actuator	Polyphenylene sulphide PPS
5	Cover	Stainless steel 1.4561 (316Ti)
6	Piston seal	FKM
7	Interface	Polyphenylene sulphide PPS (standard) Stainless steel 1.4308 (360° rotatable on request)
8	Diaphragm	EPDM (AD), PTFE/EPDM (EA), Advanced PTFE/EPDM (EU), laminate of GYLON® and EPDM (ER)
9	Valve body	See "1. General technical data" on page 3.

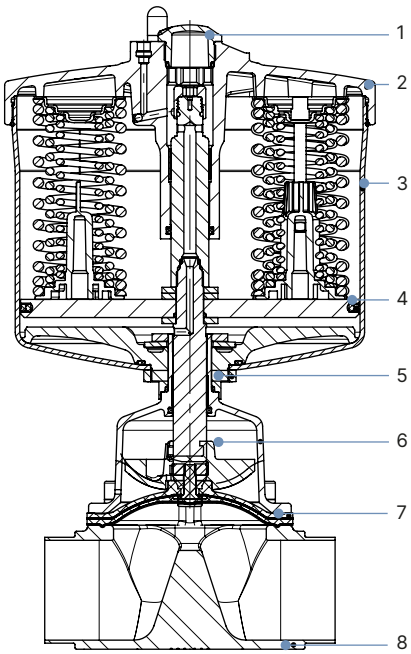

No.	Element	Material
1	Transparent cap	Polysulfon PSU
2	Actuator casing	Stainless steel 1.4308
3	Liner	Stainless steel 1.4404
4	Piston seal	FKM
5	Nut	Stainless steel 1.4301
6	Diaphragm socket	Stainless steel CF3M
7	Diaphragm	EPDM (AD), PTFE/EPDM (EA), Advanced PTFE/EPDM (EU), laminate of GYLON® and EPDM (ER)
8	Valve body	See "1. General technical data" on page 3

DTS 1000450597 EN Version: S Status: RL (released | freigegeben | valide) printed: 01.06.2026

valvesgo.com

4.4. Example of available diaphragm materials

The diaphragms have been developed to meet the unique challenges of hygienic and sterile requirements. Bürkert offers diaphragms with precise material composition and high accuracy. Bürkert diaphragms are available in a wide range of materials which have been tested and proven in applications in the food and beverage, biotechnology, pharmaceutical and cosmetics industries. The diaphragms are tested during development and production to ensure reliability under difficult process conditions.

- EPDM (AD)
- PTFE/EPDM (EA)
- Advanced PTFE/EPDM (EU)
- Laminate of GYLON® and EPDM (ER)

Further information can be found in our flyer “Diaphragm competence for hygienic applications” on our **website** ▶.

DTS 1000450597 EN Version: S Status: RL (released | freigegeben | valide) printed: 01.06.2026

valvesgo.com

valvesgo.com

5. Dimensions

5.1. Actuator

ELEMENT actuator

Note:
Dimensions in mm, unless otherwise stated

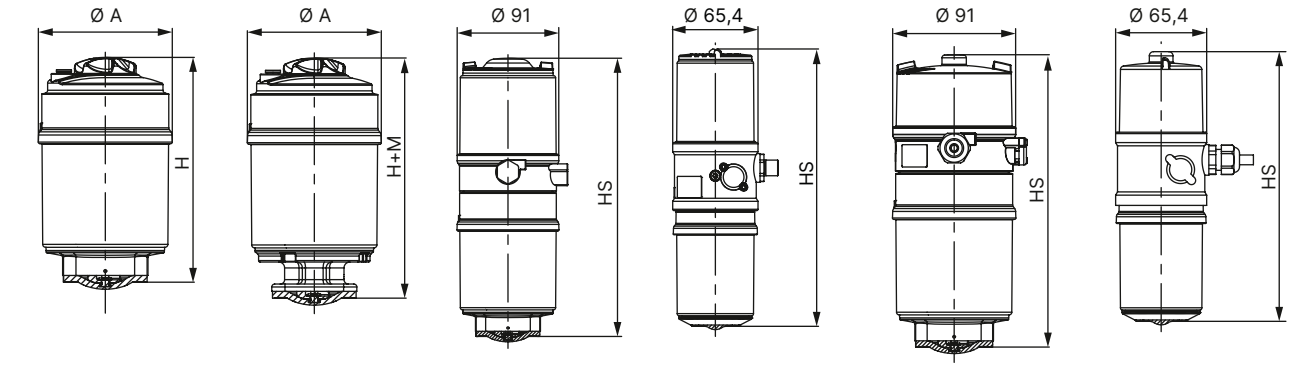

Type 2103 with plastic interface, with PPS and full stainless steel version

Type 2103 with 360° rotatable interface, stainless steel

Type 2103 with control head Type 8691

Type 2103 with control head Type 8695

Type 2103 with pneumatic control unit Type 8690

Type 2103 with pneumatic control unit Type 8697

Diaphragm size	Actuator size Ø	Ø A	H	HS with		H+M
				8691 / 8695	8690 / 8697	
8	50 (D)	65	119	207	194	141
15	50 (D)	65	132	220	206	146
	70 (M)	92	147	242	209	165
20	70 (M)	92	153	248	215	165
25	70 (M)	92	154	248	215	171
	90 (N)	120	187	282	249	204
32	90 (N)	120	202	297	264	215
40	90 (N)	120	206	300	268	221
	130 (P)	159	259	353	320	273
50	130 (P)	159	275	369	336	281
65	130 (P)	159	–	–	–	285
	225 (L)	245	–	427	395	330
80	225 (L)	245	–	433	401	336
100	225 (L)	245	–	429	397	332

DTS 1000450597 EN Version: S Status: RL (released | freigegeben | valide) printed: 01.06.2026

valvesgo.com

5.2. Forged steel valve body (VS) with welded connection

Note:

- Dimensions in mm, unless otherwise stated
- Further information on the draining angle can be found in the "Additional manual Type 2xxx 3xxx" on our website (see **operating instructions Type 2103** ▶).

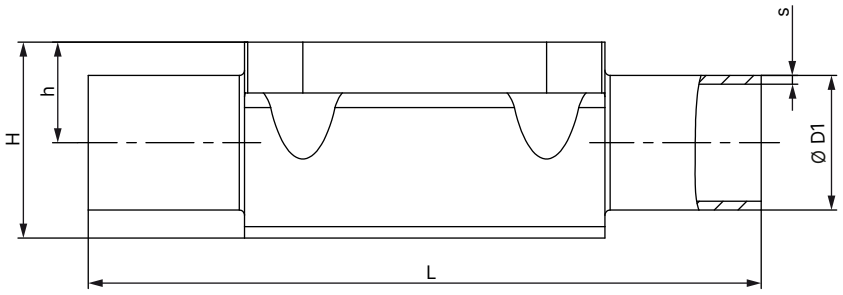

Diaphragm size	Port connection DN	Ø D1	s	L	h	H	Product key [1.)]
DIN EN ISO 1127 / ISO 4200 / DIN 11866 series B							
8	8	13.5	1.6	90	9.3	18.8	SA40
15	8	13.5	1.6	108	8.2	19.9	SA40
8	10	17.2	1.6	90	9.3	18.8	SA41
15	10	17.2	1.6	110	12.1	23.8	SA41
15	15	21.3	1.6	110	12.1	23.8	SA42
20	15	21.3	1.6	119	16.0	30.3	SA42
20	20	26.9	1.6	119	16.0	30.3	SA43
25	20	26.9	1.6	119	19.0	37.0	SA43
25	25	33.7	2	129	19.0	37.0	SA44
40	25	33.7	2	161	27.6	52.4	SA44
40	32	42.4	2	161	27.6	52.4	SA45
40	40	48.3	2	161	27.6	52.4	SA46
50	50	60.3	2	192	35.5	68.3	SA47
80	65	76.1	2	250	51.0	98.1	SA48
80	80	88.9	2.3	250	51.0	98.1	SA49
100 [2.)]	100	114.3	2.3	295	63.5	127.0	SA39
DIN 11850 - 2 / DIN 11866 series A / DIN EN 10357 series A							
8	10	13	1.5	90	9.3	18.8	SD40
15	10	13	1.5	110	8.2	19.9	SD40
15	15	19	1.5	110	12.1	23.8	SD42
20	20	23	1.5	119	16.0	30.3	SD43
25	25	29	1.5	129	19.0	37.0	SD44
40	32	35	1.5	161	27.6	52.4	SD45
40	40	41	1.5	161	27.6	52.4	SD46
50	50	53	1.5	192	35.5	68.3	SD47
80	65	70	2	250	51.0	98.1	SD48
80	80	85	2	250	51.0	98.1	SD49
100 [2.)]	100	104	2	295	63.5	127.0	SD50

DTS 1000450597 EN Version: S Status: RL (released | freigegeben | valide) printed: 01.06.2026

valvesgo.com

Diaphragm size	Port connection DN	Ø D1	s	L	h	H	Product key [1.)]
ASME BPE / DIN 11866 series C							
8	¼"	6.35	0.89	78	5.7	15.2	SA90
8	⅜"	9.53	0.89	89	5.7	15.2	SA91
8	½"	12.7	1.65	89	9.3	18.8	SA92
15	½"	12.7	1.65	108	8.2	19.9	SA92
15	¾"	19.05	1.65	108	12.1	23.8	SA93
20	¾"	19.05	1.65	117	16.0	30.3	SA93
25	1"	25.4	1.65	127	19.0	37.0	SODF
40	1½"	38.1	1.65	159	27.6	52.4	SODH
50	2"	50.8	1.65	190	35.5	68.3	SODI
50	2½"	63.5	1.65	192	35.5	68.6	SODJ
80	2½"	63.5	1.65	250	51.0	98.1	SODJ
80	3"	76.2	1.65	250	51.0	98.1	SODK
100 [2.)]	4"	101.6	2.11	295	63.5	127.0	SODL
BS 4825							
8	8	6.35	1.2	78	5.7	15.2	SODB
8	10	9.53	1.2	89	5.7	15.2	SODC
15	15	12.7	1.2	108	8.2	19.9	SODD
20	20	19.05	1.2	117	16.0	30.3	SODE
25	25	25.4	1.65	127	19.0	37.0	SODF
40	40	38.1	1.65	159	27.6	52.4	SODH
50	50	50.8	1.65	190	35.5	68.3	SODI
50	65	63.5	1.65	192	35.5	68.6	SODJ
80	80	63.5	1.65	250	51.0	98.1	SODJ
80	80	76.2	1.65	250	51.0	98.1	SODK
SMS 3008							
25	25	25	1.2	129	19.0	37.0	SA60
40	40	38	1.2	161	27.6	52.4	SA62
50	50	51	1.2	192	35.5	68.3	SA63
100 [2.)]	100	101.6	2	295	63.5	127.0	SA66
DIN 11850 - 0							
8	6	8	1	90	5.7	15.2	SC41
8	8	10	1	90	5.7	15.2	SC42

1.) This information is part of the product key (see "9.3. Bürkert Product Enquiry Form" on page 41).
2) Only available as block material

DTS 1000450597 EN Version: S Status: RL (released | freigegeben | valide) printed: 01.06.2026

valvesgo.com

5.3. Forged steel valve body (VS) with clamp connection

Note:

- Dimensions in mm, unless otherwise stated
- Further information on the draining angle can be found in the "Additional manual Type 2xxx 3xxx" on our website (see **operating instructions Type 2103** ▶).

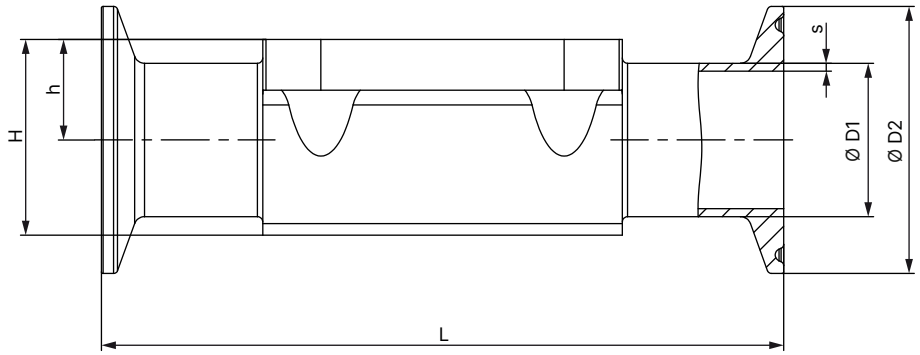

Diaphragm size	Port connection DN	Ø D1	s	Ø D2	L	h	H	Product key [1.)]	Variable code [1.)]
DIN 32676 series B (ISO pipe)									
15	15	21.3	1.6	50.5	167	12.1	23.8	TC52	–
20	20	26.9	1.6	50.5	114	16.0	30.3	TC43	–
25	25	33.7	2	50.5	129	19.0	37.0	TC44	–
40	40	48.3	2	64	161	27.6	52.4	TC46	–
50	50	60.3	2	77.5	190	35.5	68.3	TC47	–
65	65	76.1	2	91	190	35.5	63.3	TC48	–
80	80	88.9	2.3	106	222	51.0	98.1	TC49	–
100 [2.)]	100	114.3	2.3	130	350	63.5	127.0	TC50	–
DIN 32676 series A (DIN pipe)									
8	10	13	1.5	34	126	9.3	18.8	TD41	–
15	10	13	1.5	34	110	8.2	19.9	TD41	–
15	15	19	1.5	34	110	12.1	23.8	TD42	–
20	20	23	1.5	34	119	16.0	30.3	TD43	–
25	25	29	1.5	50.5	129	19.0	37.0	TD44	–
40	40	41	1.5	50.5	161	27.6	52.4	TD46	–
50	50	53	1.5	64	192	35.5	68.3	TD47	–
65	65	70	2	91	248	43.0	83.5	TC48	–
80	80	70	2	91	222	51.0	98.1	TC49	–

DTS 1000450597 EN Version: S Status: RL (released | freigegeben | valide) printed: 01.06.2026

valvesgo.com

ASME BPE									
8	¼"	6.35	0.89	25	64.5	5.7	15.2	TG50	–
8	⅜"	9.53	0.89	25	89	5.7	15.2	TG01	AF34
8	½"	12.7	1.65	25	64	9.3	18.8	TG02	–
8	½"	12.7	1.65	25	89	9.3	18.8	TG02	AF34
15	½"	12.7	1.65	25	89	8.2	19.9	TG02	–
15	½"	12.7	1.65	25	108	8.2	19.9	TG02	AF34
15	¾"	19.05	1.65	25	89	12.1	23.8	TG03	–
20	¾"	19.05	1.65	25	102	16.0	30.3	TG03	–
20	¾"	19.05	1.65	25	117	16.0	30.3	TG03	AF34
25	1"	25.4	1.65	50.5	114	19.0	37.0	TG04	–
25	1"	25.4	1.65	50.5	127	19.0	37.0	TG04	AF34
40	1½"	38.1	1.65	50.5	140	27.6	52.4	TG05	–
40	1½"	38.1	1.65	50.5	159	27.6	52.4	TG05	AF34
50	2"	50.8	1.65	64	159	35.5	68.3	TG06	–
50	2"	50.8	1.65	64	190	35.5	68.3	TG06	AF34
65	2½"	63.5	1.65	77.5	249	43.0	83.5	TG07	–
80	2½"	63.5	1.65	77.5	216	51.0	98.1	TG07	–
80	3"	76.2	1.65	91	222	51.0	98.1	TG08	–
100 [2.)]	4"	101.6	2.11	119	306	63.5	127.0	TG09	–

1.) This information is part of the product key (see "9.3. Bürkert Product Enquiry Form" on page 41).
2) Only available as block material

valvesgo.com

DTS 1000450597 EN Version: S Status: RL (released | freigegeben | valide) printed: 01.06.2026

valvesgo.com

5.4. Tube valve body (VP) with welded connection

Note:

- Dimensions in mm, unless otherwise stated
- Further information on the draining angle can be found in the "Additional manual Type 2xxx 3xxx" on our website (see **operating instructions Type 2103** ▶)..

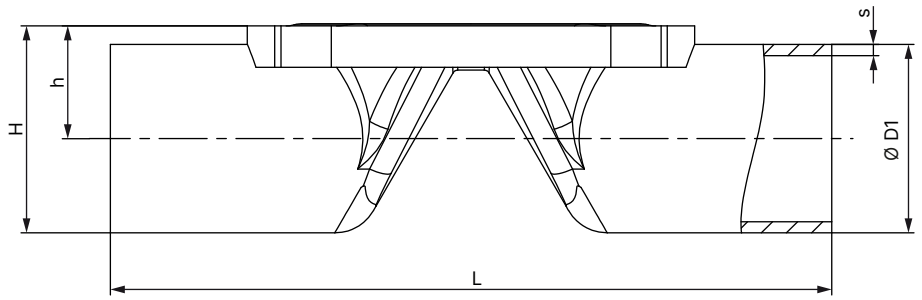

Diaphragm size	Port connection DN	Ø D1	s	L	h	H	Product key [1.)]
DIN EN ISO 1127 / ISO 4200 / DIN 11866 series B							
8	8	13.5	1.6	90	9.9	16.6	SA40
8	10	17.2	1.6	90	11.7	20.3	SA41
15	15	21.3	1.6	110	14.4	25.0	SA42
20	20	26.6	1.6	119	17.2	30.5	SA43
25	25	33.7	2	129	20.6	37.4	SA44
32	32	42.4	2	148	25.1	46.3	SA45
40	40	48.3	2	161	29.4	53.5	SA46
50	50	60.3	2	192	35.4	65.5	SA47
DIN 11850 - 2 / DIN 11866 series A / DIN EN 10357 series A							
8	10	13	1.5	90	9.9	16.4	SD40
15	15	19	1.5	110	13.2	22.7	SD42
15	20	23	1.5	119	15.2	26.7	SD43
20	25	29	1.5	129	18.2	32.7	SD44
25	32	35	1.5	148	21.2	38.7	SD45
32	40	41	1.5	161	24.4	44.9	SD46
40	50	53	1.5	192	31.7	58.2	SD47
ASME BPE / DIN 11866 series C							
8	½"	12.7	1.65	90	9.5	22.0	SA92
15	¾"	19.05	1.65	117	13.2	25.7	SA93
20	1"	25.4	1.65	127	16.4	41.7	SODF
32	1½"	38.1	1.65	159	23.0	48.2	SODH
40	2"	50.8	1.65	190	30.6	62.6	SODI
50	2½"	63.5	1.65	192	37.4	69.1	SODJ
65	3"	76.2	1.65	250	46.3	84.4	SODK
80	4"	101.6	2.11	295	60.0	110.8	SODL

1.) This information is part of the product key (see "9.3. Bürkert Product Enquiry Form" on page 41).

DTS 1000450597 EN Version: S Status: RL (released | freigegeben | valide) printed: 01.06.2026

valvesgo.com

5.5. Tube valve body (VP) with clamp connection

Note:

- Dimensions in mm, unless otherwise stated
- Further information on the draining angle can be found in the "Additional manual Type 2xxx 3xxx" on our website (see **operating instructions Type 2103** ▶).

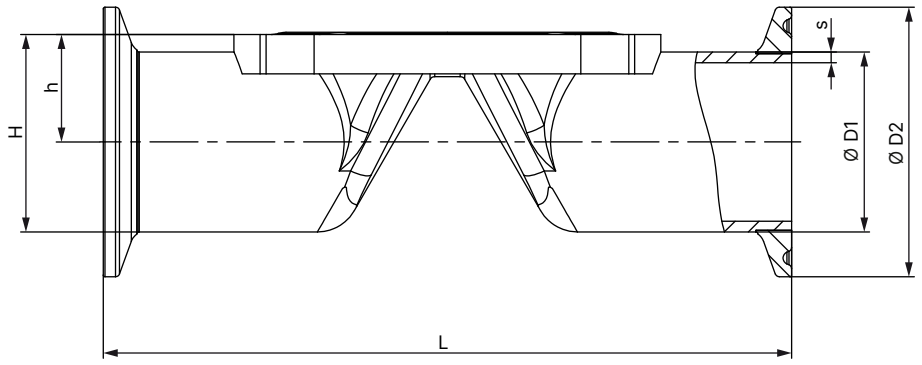

Diaphragm size	Port connection DN	Ø D1	s	Ø D2	L	h	H	Product key [1.)]
DIN 32676 series B (ISO pipe)								
8	8	13.5	1.6	25	89	9.9	22.4	TC40
8	10	17.2	1.6	25	89	11.7	24.2	TC53
15	15	21.3	1.6	50.5	110	14.4	39.6	TC52
20	20	26.9	1.6	50.5	119	17.2	42.4	TC43
25	25	33.7	2	50.5	129	20.6	45.8	TC44
32	32	42.4	2	64	148	25.1	57.1	TC55
40	40	48.3	2	64	161	29.4	61.4	TC46
50	50	60.3	2	77.5	192	35.4	74.1	TC47
DIN 32676 series A (DIN pipe)								
8	10	13	1.5	34	89	9.9	26.9	TD41
15	15	19	1.5	34	110	13.2	30.2	TD42
15	20	23	1.5	34	119	15.2	32.2	TD43
20	25	29	1.5	50.5	129	18.2	43.5	TD44
25	32	35	1.5	50.5	148	21.2	46.5	TD45
32	40	41	1.5	50.5	161	24.4	49.7	TD46
40	50	53	1.5	64	192	31.7	63.7	TD47
ASME BPE								
8	½"	12.7	1.65	25	89	9.5	22.0	TG02
15	¾"	19.05	1.65	25	102	13.2	25.7	TG03
20	1"	25.4	1.65	50.5	114	16.4	41.7	TG04
32	1½"	38.1	1.65	50.5	140	23.0	48.2	TG05
40	2"	50.8	1.65	64	159	30.6	62.6	TG06
50	2½"	63.5	1.65	77.5	190	37.4	69.1	TG07

1.) This information is part of the product key (see "9.3. Bürkert Product Enquiry Form" on page 41).

DTS 1000450597 EN Version: S Status: RL (released | freigegeben | valide) printed: 01.06.2026

valvesgo.com

5.6. Tube valve body (VP) with threaded connection

Note:

- Dimensions in mm, unless otherwise stated
- Further information on the draining angle can be found in the "Additional manual Type 2xxx 3xxx" on our website (see **operating instructions Type 2103** ▶).

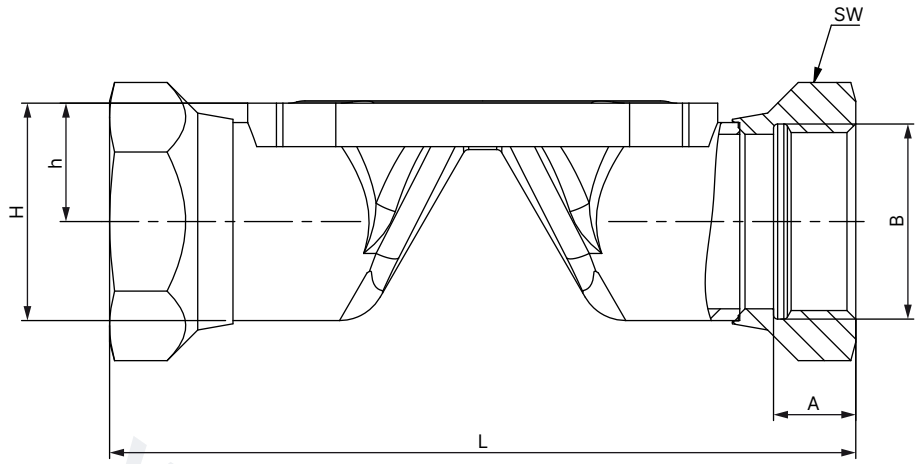

Diaphragm size	L	A	B	h	H	Spanner width of threaded ports	Product key [1.)]
8	85	9	G ¼	11.7	20.3	17	GM82
15	102	14	G ½	14.4	25.0	27	GM84
20	118	12	G ¾	17.2	30.5	32	GM85
25	127	14	G 1	20.6	37.4	41	GM86
32	146	16	G 1¼	25.1	46.3	50	GM87
40	159	18	G 1½	29.4	53.5	60	GM88
50	191	20	G 2	35.4	65.5	70	GM89
Diaphragm size	**L**	**A**	**B**	**h**	**H**	**Spanner width of threaded ports**	**Product key [1.)]**
8	85	9.7	Rc ¼	11.7	20.3	17	RC82
15	102	13.2	Rc ½	14.4	25.0	27	RC84
20	118	14.5	Rc ¾	17.2	30.5	32	RC85
25	127	16.8	Rc 1	20.6	37.4	41	RC86
32	146	19.1	Rc 1¼	25.1	46.3	50	RC87
40	159	19.1	Rc 1½	29.4	53.5	60	RC88
50	191	23.4	Rc 2	35.4	65.5	70	RC89
Diaphragm size	**L**	**A**	**B**	**h**	**H**	**Spanner width of threaded ports**	**Product key [1.)]**
8	85	10	NPT ¼	11.7	20.3	17	NM82
15	102	13.7	NPT ½	14.4	25.0	27	NM84
20	118	14	NPT ¾	17.2	30.5	32	NM85
25	127	16.8	NPT 1	20.6	37.4	41	NM86
32	146	17.3	NPT 1¼	25.1	46.3	50	NM87
40	159	17.3	NPT 1½	29.4	53.5	60	NM88
50	191	17.6	NPT 2	35.4	65.5	70	NM89

1.) This information is part of the product key (see "9.3. Bürkert Product Enquiry Form" on page 41).

DTS 1000450597 EN Version: S Status: RL (released | freigegeben | valide) printed: 01.06.2026

valvesgo.com

5.7. Tube valve body (VP) with flange connection

Note:

- Dimensions in mm, unless otherwise stated
- Further information on the draining angle can be found in the "Additional manual Type 2xxx 3xxx" on our website (see **operating instructions Type 2103** ▶).

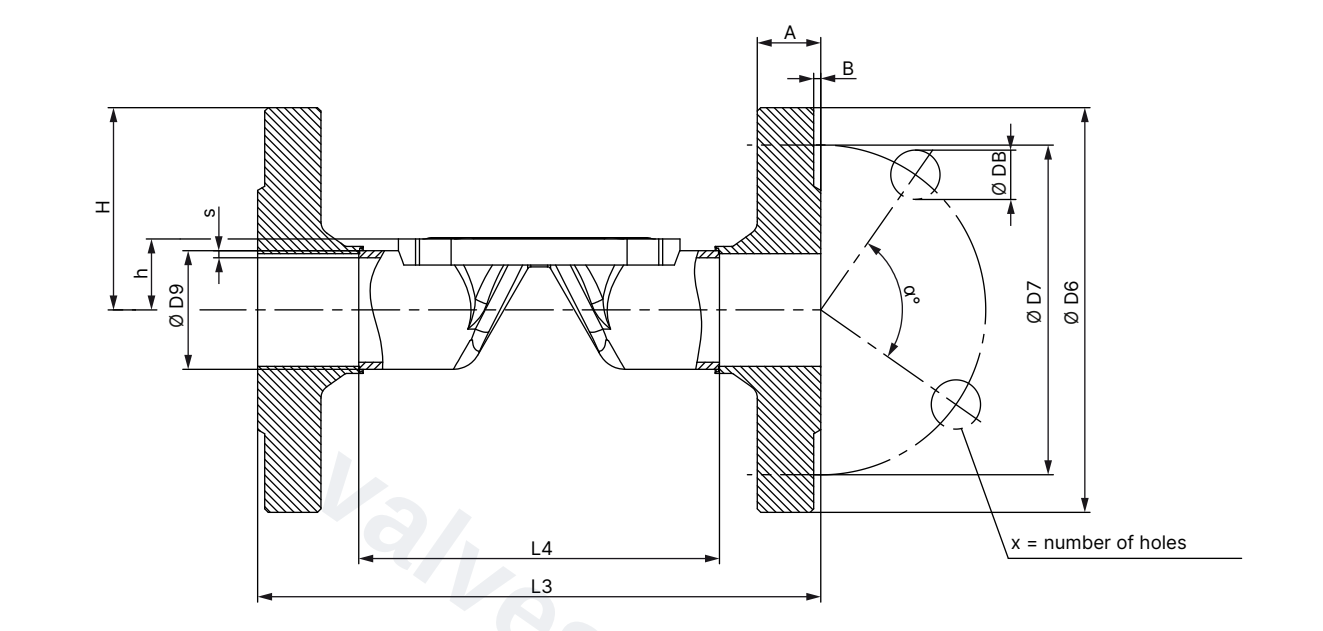

Diaphragm size	L4	L3	s	ØD9	ØD6	ØD7	a°	ØDB	A	B	X	Product key [1.)]
DIN EN 1092 - 1												
15	76.5	130	1.6	21.3	95	65	90	14	16	2	4	FD22
20	92.5	150	1.6	26.9	105	75	90	14	18	2	4	FD23
25	102.5	160	2.0	33.7	115	85	90	14	18	2	4	FD24
32	122.5	180	2.0	42.4	140	100	90	18	18	2	4	FD25
40	136.5	200	2.0	48.3	150	110	90	18	18	3	4	FD26
50	160.5	230	2.0	60.3	165	125	90	18	20	3	4	FD27
ANSI B16.5												
15	67	130	1.6	21.3	89.0	60.5	90	15.7	11.2	1.6	4	FA02
20	83	150	1.6	26.9	99.0	69.9	90	15.7	12.7	1.6	4	FA03
25	106	160	2.0	33.7	108.0	79.2	90	15.7	14.2	1.6	4	FA04
40	128	200	2.0	48.3	127.0	98.6	90	15.7	17.5	1.6	4	FA06
50	151	230	2.0	60.3	152.0	120.7	90	19.1	19.1	1.6	4	FA07
JIS 10K												
15	89	130	1.6	21.3	95.0	70.0	90	15	12	1	4	FJ01
20	103	150	1.6	26.9	100.0	75.0	90	15	14	1	4	FJ02
25	116	160	2.0	33.7	125.0	90.0	90	19	14	1	4	FJ03
40	147	200	2.0	48.3	140.0	105.0	90	19	16	2	4	FJ05
50	175	230	2.0	60.3	155.0	120.0	90	19	16	2	4	FJ06

1.) This information is part of the product key (see "9.3. Bürkert Product Enquiry Form" on page 41).

DTS 1000450597 EN Version: S Status: RL (released | freigegeben | valide) printed: 01.06.2026

valvesgo.com

5.8. Cast valve body (VG) with welded connection

Note:

- Dimensions in mm, unless otherwise stated
- Further information on the draining angle can be found in the "Additional manual Type 2xxx 3xxx" on our website (see **operating instructions Type 2103** ▶).

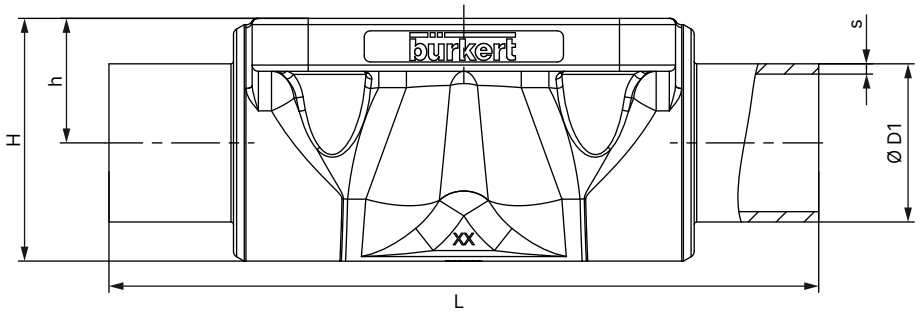

Diaphragm size	Port connection DN	Ø D1	s	L	h	H	Product key [1.)]
DIN EN ISO 1127 / ISO 4200 / DIN 11866 series B							
8	8	13.5	1.6	90	9.6	18.5	SA40
8	10	17.2	1.6	90	9.6	18.6	SA41
15	15	21.3	1.6	110	13.5	25	SA42
20	15	21.3	1.6	119	18	32.9	SA42
20	20	26.9	1.6	119	18	32.7	SA43
25	25	33.7	2	129	20	39	SA44
40	32	42.4	2	161	28.6	55	SA45
40	40	48.3	2	161	28.6	55	SA46
50	50	60.3	2	192	35.5	68	SA47
65	65	76.1	2	192	43	82	SA48
80	80	76.1	2	250	51	101	SA48
80	80	88.9	2.3	250	51	101	SA49
100	100	114.3	2.3	295	63.5	123.5	SA39
DIN 11850 - 2 / DIN 11866 series A / DIN EN 10357 series A							
8	10	13	1.5	90	9.6	18.6	SD40
15	15	19	1.5	110	13.5	25	SD42
20	20	23	1.5	119	18	32.8	SD43
25	25	29	1.5	129	20	39	SD44
40	40	41	1.5	161	28.6	55	SD46
50	50	53	1.5	192	35.5	68	SD47
65	65	70	2	192	43	82	SD48
80	80	85	2	250	51	101	SD49
100	100	104	2	295	63.5	123.5	SD50
ASME BPE / DIN 11866 series C							
8	¼"	6.35	0.89	64.5	9.6	18.6	SA90
8	⅜"	9.53	0.89	89	9.6	18.6	SA91
8	½"	12.7	1.65	89	9.6	18.6	SA92
15	¾"	19.05	1.65	102	13.5	25	SA93
20	¾"	19.05	1.65	119	18	32.8	SA93
20	1"	25.4	1.65	119	18	32.7	SODF
25	1"	25.4	1.65	114	20	39	SODF
40	1½"	38.1	1.65	140	28.6	55	SODH
50	2"	50.8	1.65	159	35.5	68	SODI
50	2½"	63.5	1.65	192	35.5	68	SODJ
65	2½"	63.5	1.65	192	43	82	SODJ
80	3"	76.2	1.65	250	51	101	SODK
100	4"	101.6	2.11	295	63.5	123.5	SODL

DTS 1000450597 EN Version: S Status: RL (released | freigegeben | valide) printed: 01.06.2026

valvesgo.com

Diaphragm size	Port connection DN	Ø D1	s	L	h	H	Product key [1.)]
BS 4825							
8	8	6.35	1.2	64.5	9.6	18.6	SODB
8	10	9.53	1.2	89	9.6	18.6	SODC
8	15	12.7	1.2	89	9.6	18.6	SODD
15	20	19.05	1.2	102	14	25.5	SODE
20	25	25.4	1.65	119	18	32.8	SODF
25	25	25.4	1.65	114	20	39	SODF
40	40	38.1	1.65	140	28.6	55	SODH
50	50	50.8	1.65	159	35.5	68	SODI
50	65	63.5	1.65	192	35.5	68	SODJ
65	65	63.5	1.65	192	43	82	SODJ
80	80	76.2	1.65	250	51	101	SODK
100	100	101.6	2.11	295	63.5	123.5	SODL
SMS 3008							
20	25	25	1.2	119	18	32.8	SA60
25	25	25	1.2	129	20	39	SA60
40	40	38	1.2	161	28.6	55	SA62
50	50	51	1.2	192	35.5	68	SA63
DIN 11850 - 0							
8	4	6	1	90	9.6	18.6	SC40
8	6	8	1	90	9.6	18.6	SC41
8	8	10	1	90	9.6	18.6	SC42
15	15	18	1.5	110	13.5	25	SC43
20	20	22	1.5	119	18	32.8	SC44
25	25	28	1.5	129	20	39	SC45
25	32	34	1.5	129	20	39	SC46
40	40	40	1.5	161	28.6	56	SC47
50	50	52	1.5	192	35.5	68	SC48

1.) This information is part of the product key (see "9.3. Bürkert Product Enquiry Form" on page 41).

DTS 1000450597 EN Version: S Status: RL (released | freigegeben | valide) printed: 01.06.2026

valvesgo.com

valvesgo.com

5.9. Cast valve body (VG) with clamp connection

Note:

- Dimensions in mm, unless otherwise stated
- Further information on the draining angle can be found in the "Additional manual Type 2xxx 3xxx" on our website (see **operating instructions Type 2103** ▶).

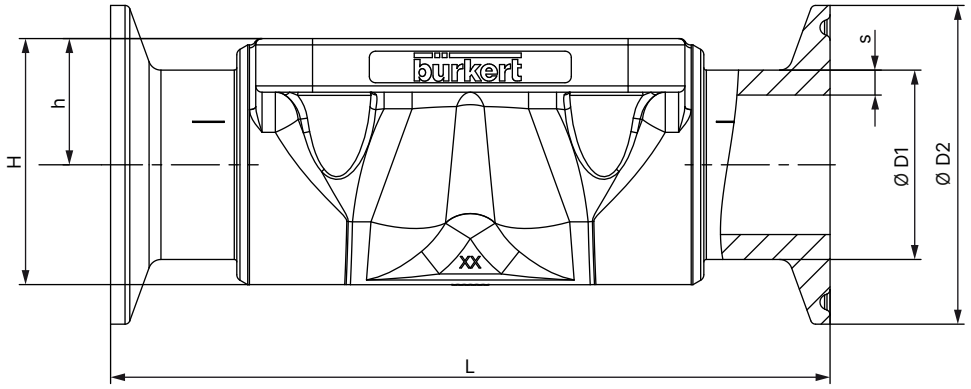

Diaphragm size	Port connection DN	Ø D1	s	Ø D2	L	h	H	Product key [1.)]
DIN 32676 series B (ISO pipe)								
25	25	33.7	2	50.5	129	20	39	TC44
40	40	48.3	2	64	161	28.6	55	TC46
50	50	60.3	2	77.5	192	35.5	68	TC47
DIN 32676 series A (DIN pipe)								
15	15	19	1.5	34	110	13.5	25	TD42
20	20	23	1.5	34	119	18	32.8	TD43
25	25	29	1.5	50.5	129	20	39	TD44
40	40	41	1.5	50.5	161	28.6	55	TD46
50	50	53	1.5	64	192	35.5	68	TD47
ASME BPE								
8	⅜"	9.53	0.89	25	89	9.6	18.6	TG01
8	½"	12.7	1.65	25	89	9.6	18.6	TG02
15	¾"	19.05	1.65	25	102	13.5	23	TG03
20	¾"	19.05	1.65	25	117	18	25	TG03
25	1"	25.4	1.65	50.5	114	18	40	TG04
40	1½"	38.1	1.65	50.5	140	28.6	55	TG05
50	2"	50.8	1.65	64	159	35.5	68	TG06
50	2½"	63.5	1.65	77.5	190	35.5	68	TG07
65	2½"	63.5	1.65	77.5	249	43	82	TG07
80	3"	76.2	1.65	91	306	51	101	TG08
100	4"	101.6	2.11	119	352	63.5	123.5	TG09
BS 4825: Clamp BS 4825 - 3 / pipe BS 4825 - 1								
8	15	12.7	1.2	25	89	9.6	18.9	TH42
15	20	19.05	1.2	25	102	13.5	25	TH43
25	25	25.4	1.65	50.5	114	20	39	TG04
40	40	38.1	1.65	50.5	140	28.6	55	TG05
50	50	50.8	1.65	64	159	35.5	68	TG06
50	65	63.5	1.65	77.5	190	35.5	68	TG07
Clamp 34.0 similar to DIN 32676 series B (ISO pipe)								
15	15	21.3	1.6	34	110	13.5	25	TC42

1.) This information is part of the product key (see "9.3. Bürkert Product Enquiry Form" on page 41).

DTS 1000450597 EN Version: S Status: RL (released | freigegeben | valide) printed: 01.06.2026

valvesgo.com

5.10. Plastic valve body (PV, PP, PD) with spigot connection

Note:

- Dimensions in mm. unless otherwise stated
- The specified values refer to the new plastic body. The previous bodies (REV1) may differ slightly from the new dimensions.

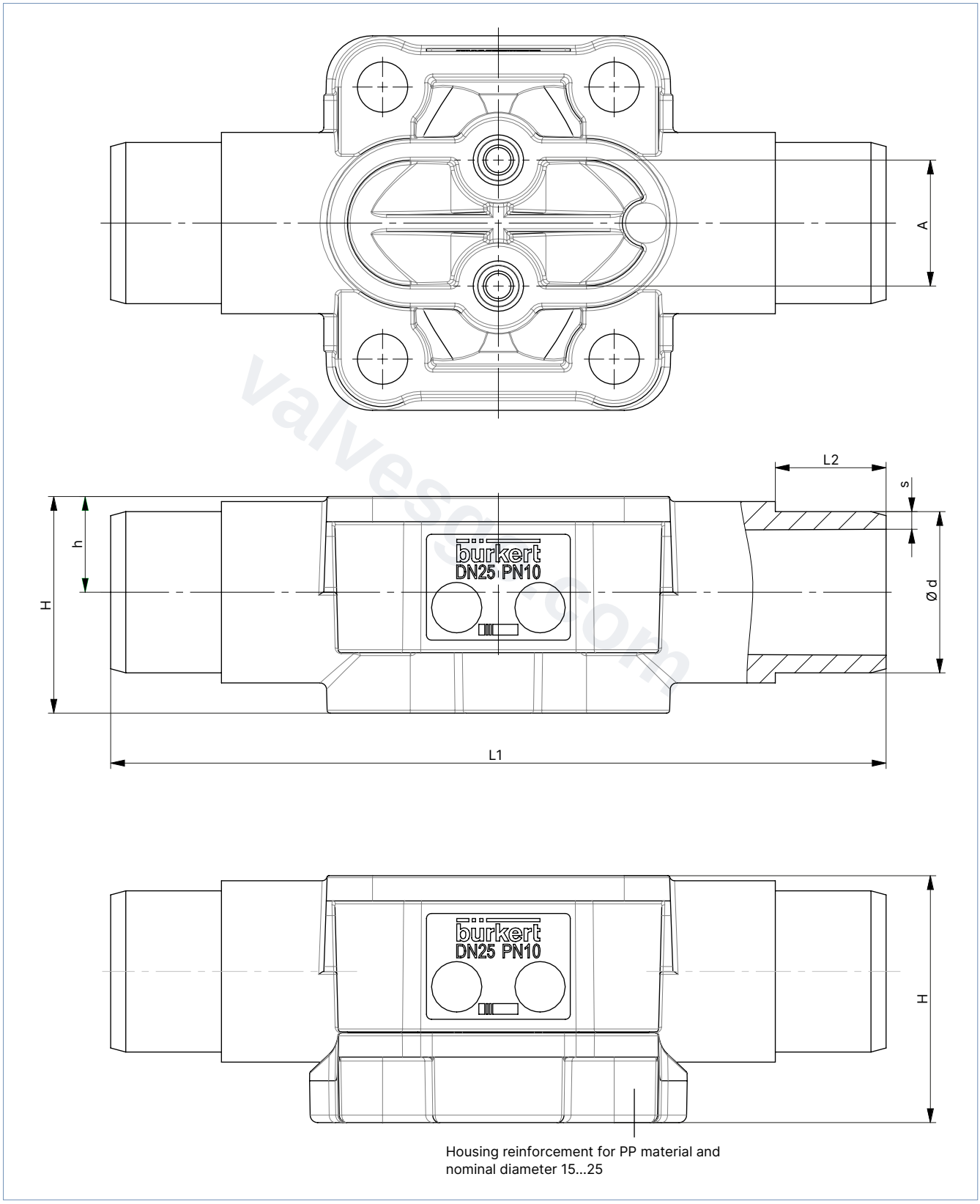

DTS 1000450597 EN Version: S Status: RL (released | freigegeben | valide) printed: 01.06.2026

valvesgo.com

Diaphragm size	A	L1	L2	Ø d	s	h	H	Product key [1.)]
PP (PP)								
15	25	124	16	20	2.5	12	33	SS25
20	25	144	19	25	2.5	17	42	SS26
25	25	154	22	32	3.5	19	49	SS27
32	45	174	26	40	4	25	52.5	SS28
40	45	194	31	50	5	28.6	65.5	SS29
50	45	224	44	63	6.5	35.5	79	SS30
PVDF (PD)								
15	25	124	16	20	2.5	12	29	SS25
20	25	144	19	25	2.5	17	36	SS26
25	25	154	22	32	3.5	19	43	SS27
32	45	174	26	40	4	25	52.5	SS28
40	45	194	31	50	5	28.6	65.5	SS29
50	45	224	44	63	6.5	35.5	79	SS30
PVC-U (PV)								
15	25	124	16	20	2.5	12	29	KS25
20	25	144	19	25	2.5	17	36	KS26
25	25	154	22	32	3.5	19	43	KS27
32	45	174	26	40	4	25	52.5	KS28
40	45	194	31	50	5	28.6	65.5	KS29
50	45	224	44	63	6.5	35.5	79	KS30

1.) This information is part of the product key (see "9.3. Bürkert Product Enquiry Form" on page 41).

valvesgo.com

DTS 1000450597 EN Version: S Status: RL (released | freigegeben | valide) printed: 01.06.2026

valvesgo.com

5.11. Plastic valve body (PW, PV, PP, PD) with true union

Note:

- Dimensions in mm. unless otherwise stated
- The specified values refer to the new plastic body. The previous bodies (REV1) may differ slightly from the new dimensions.

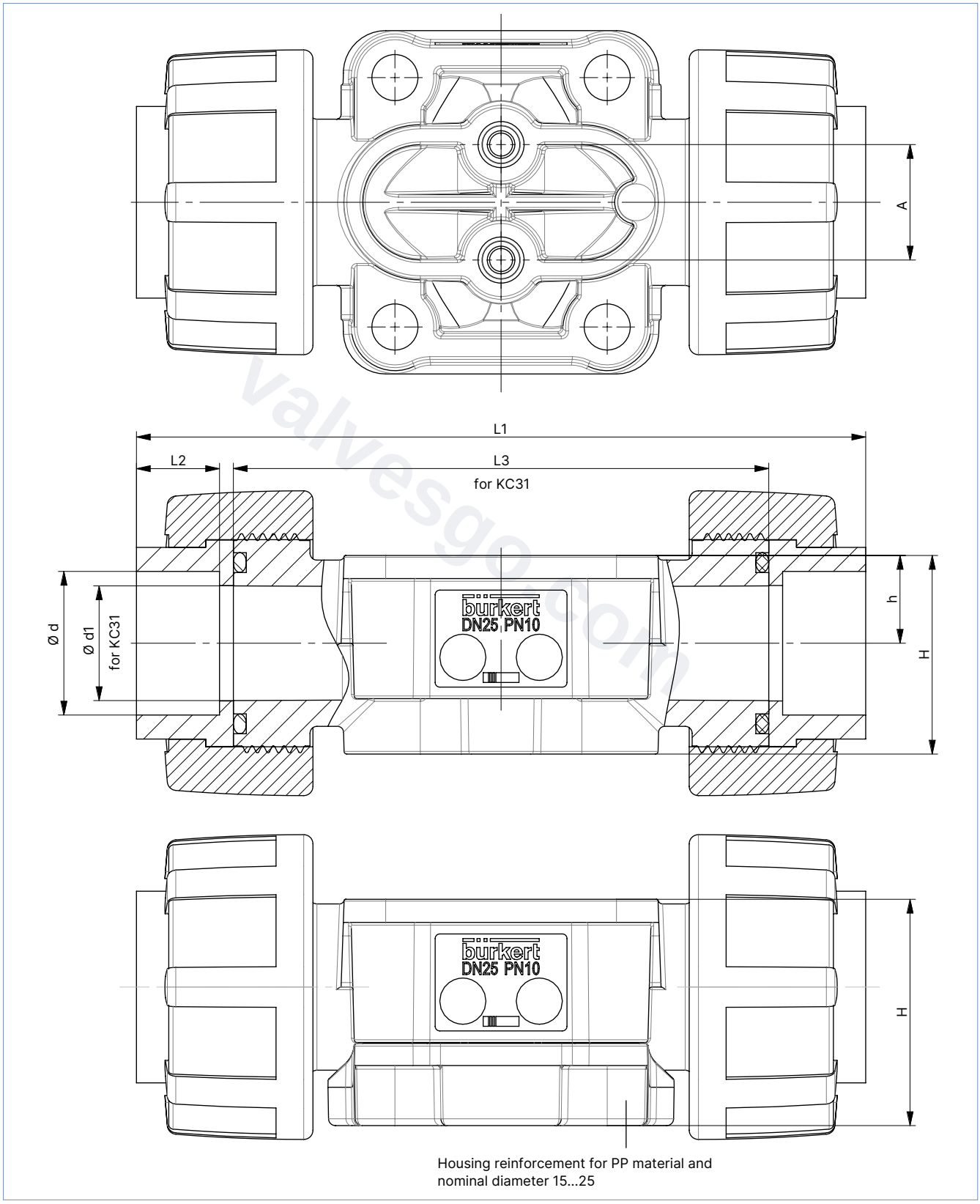

DTS 1000450597 EN Version: S Status: RL (released | freigegeben | valide) printed: 01.06.2026

valvesgo.com

Diaphragm size	A	L1	L2	L3	Ø d	Ø d1	h	H	Product key [1)]	Variable code
PP (PP)										
15	25	125	14.5	–	19.2	–	12	33	SM25	–
20	25	146	16	–	24.2	–	17	42	SM26	
25	25	158	18	–	31.1	–	19	49	SM27	
32	45	181	20.5	–	39	–	25	52.5	SM28	
40	45	207	23.5	–	48.9	–	28.6	65.5	SM29	
50	45	245	27.5	–	61.6	–	35.5	79	SM30	
15	25	–	–	90	–	14.9	12	33	SM25	KC31 line connection without insert part, O-ring and union nut
20	25	–	–	108	–	19.9	17	42	SM26	
25	25	–	–	116	–	24.9	19	49	SM27	
32	45	–	–	134	–	31.9	25	52.5	SM28	
40	45	–	–	154	–	39.9	28.6	65.5	SM29	
50	45	–	–	184	–	49.9	35.5	79	SM30	
15	25	132	18	–	20	–	12	33	KM25	Optionally available with variable code KC93 insert part made of PVC-C
20	25	156	21	–	25	–	17	42	KM26	
25	25	170	24	–	32	–	19	49	KM27	
32	45	196	28	–	40	–	25	52.5	KM28	
40	45	222	31	–	50	–	28.6	65.5	KM29	
50	45	266	38	–	63	–	35.5	79	KM30	
PVDF (PD)										
15	25	125	14.5	–	19.2	–	12	29	SM25	–
20	25	146	16	–	24.2	–	17	36	SM26	
25	25	158	18	–	31.1	–	19	43	SM27	
32	45	181	20.5	–	39	–	25	52.5	SM28	
40	45	207	23.5	–	48.9	–	28.6	65.5	SM29	
50	45	245	27.5	–	61.6	–	35.5	79	SM30	
15	25	–	–	90	–	14.9	12	29	SM25	KC31 line connection without insert part, O-ring and union nut
20	25	–	–	108	–	19.9	17	36	SM26	
25	25	–	–	116	–	24.9	19	43	SM27	
32	45	–	–	134	–	31.9	25	52.5	SM28	
40	45	–	–	154	–	39.9	28.6	65.5	SM29	
50	45	–	–	184	–	49.9	35.5	79	SM30	
15	25	132	18	–	20	–	12	29	KM25	Optionally available with variable code KC93 insert part made of PVC-C
20	25	156	21	–	25	–	17	36	KM26	
25	25	170	24	–	32	–	19	43	KM27	
32	45	196	28	–	40	–	25	52.5	KM28	
40	45	222	31	–	50	–	28.6	65.5	KM29	
50	45	266	38	–	63	–	35.5	79	KM30	

DTS 1000450597 EN Version: S Status: RL (released | freigegeben | valide) printed: 01.06.2026

valvesgo.com

PVC-U (PV)										
15	25	128	16	–	20	–	12	29	KM25	–
20	25	152	19	–	25	–	17	36	KM26	
25	25	166	22	–	32	–	19	43	KM27	
32	45	192	26	–	40	–	25	52.5	KM28	
40	45	222	31	–	50	–	28.6	65.5	KM29	
50	45	266	38	–	63	–	35.5	79	KM30	
15	25	–	–	90	–	14.9	12	29	KM25	KC31 line connection without insert part, O-ring and union nut
20	25	–	–	108	–	19.9	17	36	KM26	
25	25	–	–	116	–	24.9	19	43	KM27	
32	45	–	–	134	–	31.9	25	52.5	KM28	
40	45	–	–	154	–	39.9	28.6	65.5	KM29	
50	45	–	–	184	–	49.9	35.5	79	KM30	
15	25	140.6	22.3	–	21.5	–	12	29	KM41	–
20	25	164.8	25.4	–	26.7	–	17	36	KM42	
25	25	179.2	28.6	–	33.5	–	19	43	KM43	
32	45	203.6	31.8	–	42.3	–	25	52.5	KM44	
40	45	230	35	–	48.6	–	28.6	65.5	KM45	
50	45	266.2	38.1	–	60.6	–	35.5	79	KM46	
PVC-C (PW)										
15	25	–	–	90	–	14.9	12	29	KM25	KC31 line connection without insert part, O-ring and union nut
20	25	–	–	108	–	19.9	17	36	KM26	
25	25	–	–	116	–	24.9	19	43	KM27	
32 2.)	45	–	–	134	–	31.9	25	52.5	KM28	
40 2.)	45	–	–	154	–	39.9	28.6	65.5	KM29	
50 2.)	45	–	–	184	–	49.9	35.5	79	KM30	
15	25	132	18	–	20	–	12	29	KM25	–
20	25	156	21	–	25	–	17	36	KM26	
25	25	170	24	–	32	–	19	43	KM27	
32 2.)	45	196	28	–	40	–	25	52.5	KM28	
40 2.)	45	222	31	–	50	–	28.6	65.5	KM29	
50 2.)	45	266	38	–	63	–	35.5	79	KM30	

1.) This information is part of the product key (see "9.3. Bürkert Product Enquiry Form" on page 41).
2.) Available soon!

DTS 1000450597 EN Version: S Status: RL (released | freigegeben | valide) printed: 01.06.2026

valvesgo.com

5.12. Plastic valve body (PV, PP, PD) with flange connection

Note:

- Dimensions in mm. unless otherwise stated
- The specified values refer to the new plastic body. The previous bodies (REV1) may differ slightly from the new dimensions.

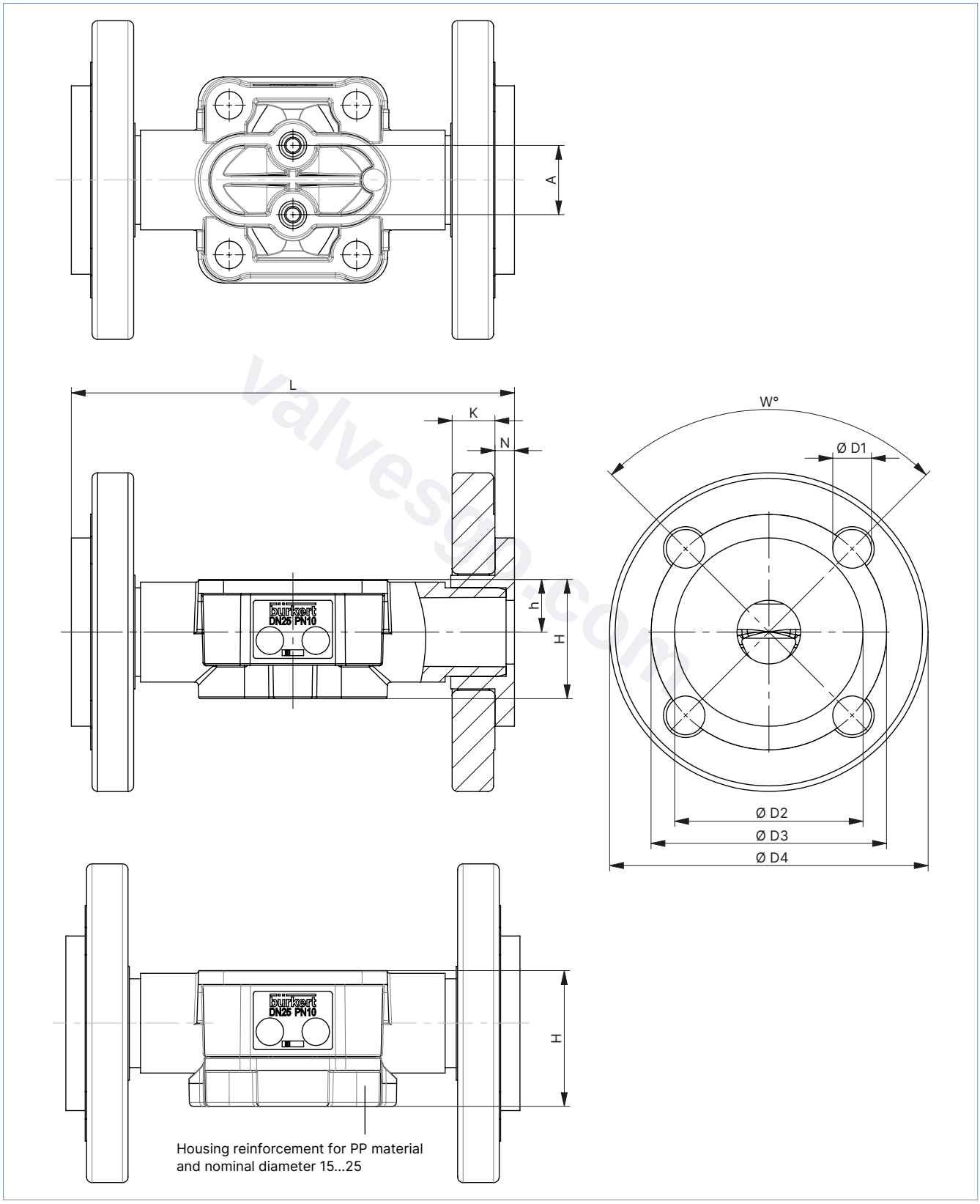

DTS 1000450597 EN Version: S Status: RL (released | freigegeben | valide) printed: 01.06.2026

valvesgo.com

Diaphragm size	A	L	K	N	h	H	W°	Ø D1	Ø D2	Ø D3	Ø D4	Product key 1.)
PP (PP)												
15	25	134	13.5	7	12	33	90	4×14	45	65	95	FL24
20	25	154	14.5	7	17	42	90	4×14	54	75	105	FL25
25	25	164	15.5	7	19	49	90	4×14	63	85	115	FL26
32	45	184	17.5	8	25	52.5	90	4×18	73	100	140	FL27
40	45	204	17.5	8	28.6	65.5	90	4×18	82	110	150	FL28
50	45	234	19.5	14	35.5	79	90	4×18	102	125	166	FL29
65	72	290	19	–	47	93	90	4×17.5	106	144	185	FL30
80	120	310	36	–	50	107	45	8×18	–	160	200	FF31
100	120	350	35	–	65.5	134.5	45	8×18	–	180	225	FF32
PVDF (PD)												
15	25	130	13.5	6	12	29	90	4×14	45	65	95	FL24
20	25	150	14.5	7	17	36	90	4×14	58	75	105	FL25
25	25	160	15.5	7	19	43	90	4×14	68	85	115	FL26
32	45	180	17.5	8	25	52.5	90	4×18	78	100	140	FL27
40	45	200	17.5	8	28.6	65.5	90	4×18	88	110	150	FL28
50	45	230	19.5	9	35.5	79	90	4×18	102	125	166	FL29
65	72	290	19	–	47	93	90	4×17.5	106	144	185	FL30
80	120	310	36	–	50	107	45	8×18	–	160	200	FF31
100	120	350	35	–	65.5	134.5	45	8×18	–	180	225	FF32
PVC-U (PV)												
15	25	130	13.5	6	12	29	90	4×14	34	65	95	FL24
20	25	150	14.5	7	17	36	90	4×14	41	75	105	FL25
25	25	160	15.5	7	19	43	90	4×14	50	85	115	FL26
32	45	180	17.5	8	25	52.5	90	4×18	61	100	140	FL27
40	45	200	17.5	8	28.6	65.5	90	4×18	73	110	150	FL28
50	45	230	19.5	9	35.5	79	90	4×18	90	125	166	FL29
65	72	290	19	–	47	93	90	4×17.5	106	144	185	FL30
80	120	310	36	–	50	107	45	8×18	–	160	200	FF31
100	120	350	35	–	65.5	134.5	45	8×18	–	180	225	FF32

1.) This information is part of the product key (see "9.3. Bürkert Product Enquiry Form" on page 41).

DTS 1000450597 EN Version: S Status: RL (released | freigegeben | valide) printed: 01.06.2026

valvesgo.com

6. Performance specifications

6.1. Flow characteristics

Note:

- The K_V values may vary slightly with different actuator sizes and diaphragm materials.
- More K_V values are available on request.
- K_V value [m³/h]: Measurement with water according to DIN EN 60534 - 2 - 4

Forged steel valve body (VS)

Diaphragm size	Port connection (pipe)		Actuator size Ø	Diaphragm material	K_V value by stroke									K_{VS} value
					10 %	20 %	30 %	40 %	50 %	60 %	70 %	80 %	90 %	100 %
	DN	NPS	[mm]		[m³/h]									
DIN 11850 - 2 / DIN 11866 series A / DIN EN 10357 series A														
8	10	⅜	50 (D)	EPDM	–	–	–	–	–	–	–	–	–	1.5
				PTFE	–	–	–	–	–	–	–	–	–	1.9
15	15	½	70 (M)	EPDM	0.0	0.6	1.5	2.7	3.7	4.6	5.5	6.0	6.2	6.5
				PTFE	0.0	0.3	1.1	1.9	2.7	3.6	4.4	5.1	5.6	6.0
20	20	¾	70 (M)	EPDM	0.6	2.1	4.4	6.3	8.0	9.5	10.6	11.5	12.0	12.4
				PTFE	0.3	1.8	3.1	5.3	7.0	8.4	9.7	10.7	11.5	12.0
25	25	1	70 (M), 90 (N)	EPDM	0.1	2.6	4.8	8.0	10.8	13.4	15.8	17.4	18.9	20.0
				PTFE	0.6	2.4	4.1	6.5	9.0	11.0	12.9	14.6	16.0	17.0
40	32	1¼	90 (N)	EPDM	2.9	8.9	15.6	21.5	27.0	30.5	32.5	33.0	34.0	34.0
				PTFE	4.5	10.2	16.7	22.0	26.5	30.0	32.0	33.5	34.0	34.0
40	40	1½	90 (N), 130 (P)	EPDM	3.7	9.4	16.6	22.5	28.0	32.0	35.0	37.5	39.0	40.0
				PTFE	3.9	9.3	16.2	22.0	27.0	31.5	34.5	37.0	39.0	40.0
50	50	2	130 (P)	EPDM	3.3	14.5	26.5	38.0	46.5	52	57	60	63	66
				PTFE	5.7	16.0	28.0	39.0	47.5	53	57	60	63	66
65	65	2½	130 (P), 225 (L)	EPDM, PTFE	4.4	29.0	49.0	68	84	94	100	103	107	110
80	65	2½	225 (L)	EPDM, PTFE	14.0	52	87	116	135	147	150	150	150	150
80	80	3	225 (L)	EPDM, PTFE	13.6	48.0	83	112	132	149	160	168	173	175
100	100	4	225 (L)	EPDM, PTFE	15.7	60	93	127	159	187	206	221	232	240
DIN EN ISO 1127 / ISO 4200 / DIN 11866 series B														
8	8	¼	50 (D)	EPDM	–	–	–	–	–	–	–	–	–	1.5
				PTFE	–	–	–	–	–	–	–	–	–	1.9
8	10	⅜	50 (D)	EPDM	–	–	–	–	–	–	–	–	–	1.5
				PTFE	–	–	–	–	–	–	–	–	–	1.9
15	10	⅜	70 (M)	EPDM	0.0	0.6	1.5	2.8	3.7	4.4	4.9	5.1	5.3	5.5
				PTFE	0.0	0.2	0.9	1.7	2.6	3.5	4.2	4.7	5.0	5.2
15	15	½	70 (M)	EPDM	0.0	0.6	1.5	2.7	3.7	4.6	5.5	6.0	6.2	6.5
				PTFE	0.0	0.3	1.1	1.9	2.7	3.6	4.4	5.1	5.6	6.0
20	20	¾	70 (M)	EPDM	0.6	2.1	4.4	6.3	8.0	9.5	10.6	11.5	12.1	12.5
				PTFE	0.3	1.8	3.1	5.3	7.0	8.4	9.7	10.7	11.5	12.0
25	25	1	70 (M), 90 (N)	EPDM	0.1	2.4	4.3	7.2	9.7	12.1	14.2	15.7	17.0	18.0
				PTFE	0.6	2.2	3.9	6.1	8.5	10.4	12.2	13.7	15.1	16.0
40	40	1½	90 (N), 130 (P)	EPDM	3.8	9.6	17.0	23.0	28.5	32.5	36.0	38.5	40.0	41.0
				PTFE	3.9	9.3	16.2	22.0	27.5	31.5	34.5	37.0	39.0	40.0
50	50	2	130 (P)	EPDM	3.3	14.4	26.5	38.0	46.5	53	58	61	63	66
				PTFE	5.8	16.3	28.5	39.5	48.0	54	58	62	65	67
65	65	2½	130 (P), 225 (L)	EPDM, PTFE	4.4	29.0	49.0	68	84	94	100	103	107	110
80	80	3	225 (L)	EPDM, PTFE	14.0	50	84	114	138	155	166	173	175	175
100	100	4	225 (L)	EPDM, PTFE	15.7	60	93	127	159	187	206	221	232	240

DTS 1000450597 EN Version: S Status: RL (released | freigegeben | valide) printed: 01.06.2026

valvesgo.com

valvesgo.com

ASME BPE / DIN 11866 series C														
8	8	¼	50 (D)	EPDM	–	–	–	–	–	–	–	–	–	0.7
				PTFE	–	–	–	–	–	–	–	–	–	0.7
8	10	⅜	50 (D)	EPDM	–	–	–	–	–	–	–	–	–	1.6
				PTFE	–	–	–	–	–	–	–	–	–	1.8
8	15	½	50 (D)	EPDM	–	–	–	–	–	–	–	–	–	1.5
				PTFE	–	–	–	–	–	–	–	–	–	1.9
15	15	½	70 (M)	EPDM	0.0	0.4	0.9	1.7	2.0	2.2	2.2	2.2	2.2	2.2
				PTFE	0.0	0.4	0.9	1.7	2.0	2.2	2.2	2.2	2.2	2.2
20	20	¾	70 (M)	EPDM	1.0	2.7	4.9	6.6	7.7	8.2	8.4	8.4	8.4	8.4
				PTFE	0.3	1.8	3.5	5.3	6.7	7.6	8.1	8.4	8.5	8.5
25	25	1	70 (M), 90 (N)	EPDM	0.6	2.6	5.4	8.1	10.6	12.4	13.9	14.8	15.4	15.5
				PTFE	0.7	2.3	4.3	6.7	8.9	10.7	12.2	13.4	14.0	14.5
40	40	1½	90 (N), 130 (P)	EPDM	3.1	9.6	17.0	23.5	29.0	33.0	35.5	36.0	37.0	37.0
				PTFE	4.9	11.2	18.4	24.0	29.0	33.0	35.5	37.0	37.5	37.5
50	50	2	130 (P)	EPDM	2.4	12.9	26.0	37.0	45.5	53	58	62	65	66
				PTFE	6.5	15.6	27.5	38.0	47.5	54	59	62	64	66
50	65	2½	130 (P)	EPDM, PTFE	1.0	7.2	18.7	34.5	48.0	57	63	67	70	71
65	65	2½	130 (P), 225 (L)	EPDM, PTFE	4.5	25.5	46.5	65	80	91	100	105	109	110
80	80	3	225 (L)	EPDM, PTFE	14.3	47.5	81	113	137	153	161	169	176	180
100	100	4	225 (L)	EPDM, PTFE	6.9	51	87	121	154	181	201	216	227	235

valvesgo.com

DTS 1000450597 EN Version: S Status: RL (released | freigegeben | valide) printed: 01.06.2026

valvesgo.com

Tube valve body (VP)

Diaphragm size	Port connection (pipe)		Actuator size Ø	Diaphragm material	K_v value by stroke									K_{vs} value
					10 %	20 %	30 %	40 %	50 %	60 %	70 %	80 %	90 %	100 %
	DN	NPS	[mm]		[m³/h]									
DIN 11850 - 2 / DIN 11866 series A / DIN EN 10357 series A														
8	10	⅜	50 (D)	EPDM	–	–	–	–	–	–	–	–	–	1.9
				PTFE	–	–	–	–	–	–	–	–	–	2.4
15	15	½	70 (M)	EPDM	0.0	0.4	1.3	2.5	3.7	4.7	5.6	6.3	6.9	7.2
				PTFE	0.0	0.1	0.6	1.3	2.1	3.1	3.8	4.4	5.3	6.7
15	20	¾	70 (M)	EPDM	0.0	0.1	0.9	1.8	2.8	4.3	5.3	6.0	6.5	6.9
				PTFE	0.0	0.0	0.5	1.2	1.9	2.6	3.6	4.5	5.1	5.5
20	25	1	70 (M)	EPDM	0.3	2.0	4.0	6.7	9.2	11.2	12.6	13.8	14.5	14.9
				PTFE	0.2	1.4	2.7	4.3	6.4	9.1	11.0	12.3	13.2	13.7
25	32	1¼	70 (M), 90 (N)	EPDM	0.0	0.2	2.1	4.4	7.4	11.1	13.8	16.4	18.4	20.0
				PTFE	0.0	0.4	1.8	3.4	5.2	7.6	9.9	12.4	14.3	15.8
32	40	1½	90 (N)	EPDM	0.1	3.4	8.2	13.8	20.5	25.0	29.0	32.0	34.0	35.0
				PTFE	1.9	5.4	9.5	15.7	20.5	24.5	28.5	31.5	33.5	34.5
40	50	2	90 (N), 130 (P)	EPDM	0.3	5.3	12.9	22.0	29.0	35.0	38.5	42.0	42.3	42.5
				PTFE	1.9	7.8	15.5	22.5	30.0	35.0	38.0	40.5	41.0	44.0
DIN EN ISO 1127 / ISO 4200 / DIN 11866 series B														
8	8	¼	50 (D)	EPDM	–	–	–	–	–	–	–	–	–	1.9
				PTFE	–	–	–	–	–	–	–	–	–	2.4
8	10	⅜	50 (D)	EPDM	–	–	–	–	–	–	–	–	–	1.7
				PTFE	–	–	–	–	–	–	–	–	–	2.2
15	15	½	70 (M)	EPDM	0.0	0.4	1.1	2.0	3.3	4.4	5.3	6.0	6.6	7.0
				PTFE	0.0	0.2	1.0	1.9	3.0	4.0	4.9	5.6	6.2	6.6
20	20	¾	70 (M)	EPDM	0.5	2.2	4.2	7.1	9.0	10.5	11.6	12.5	13.2	13.5
				PTFE	0.0	0.8	2.2	3.8	6.1	7.9	9.5	10.6	11.5	12.1
25	25	1	70 (M), 90 (N)	EPDM	0.0	0.2	2.1	4.4	7.5	11.4	13.7	15.8	17.6	19.1
				PTFE	0.0	0.3	1.8	3.3	5.1	7.5	10.5	12.5	14.2	15.6
32	32	1¼	90 (N)	EPDM	0.0	3.6	8.1	15.0	20.5	25.0	28.5	32.0	34.5	36.0
				PTFE	1.7	5.3	9.4	16.0	21.0	25.5	29.0	32.5	35.0	36.0
40	40	1½	90 (N), 130 (P)	EPDM	0.2	5.2	13.6	23.0	30.5	36.5	41.5	44.0	46.5	47.5
				PTFE	1.8	7.9	15.7	23.5	30.5	36.0	42.0	44.5	46.0	47.0
50	50	2	130 (P)	EPDM	1.0	10.7	25.5	38.0	47.5	55	62	65	68	70
ASME BPE / DIN 11866 series C														
8	15	½	50 (D)	EPDM	–	–	–	–	–	–	–	–	–	1.8
				PTFE	–	–	–	–	–	–	–	–	–	2.2
15	20	¾	70 (M)	EPDM, PTFE	0.0	0.4	1.3	2.2	3.2	4.3	5.1	5.7	6.2	6.5
20	25	1	70 (M)	EPDM, PTFE	0.1	0.8	2.5	4.4	7.0	9.0	10.5	11.6	12.3	12.7
32	40	1½	90 (N)	EPDM, PTFE	0.4	4.9	9.3	15.8	20.5	25.0	28.0	31.0	31.5	32.0
40	50	2	90 (N), 130 (P)	EPDM, PTFE	1.8	7.2	14.6	22.5	30.0	35.5	40.0	44.5	45.5	46.0
50	65	2½	130 (P)	EPDM, PTFE	2.0	7.0	18.4	29.0	38.5	47.5	53	54	57	60
65	80	3	130 (P), 225 (L)	EPDM, PTFE	3.8	20.0	46.0	58	64	69	74	79	82	85
80	100	4	225 (L)	EPDM, PTFE	6.4	36.5	70	100	124	142	152	159	164	165

DTS 1000450597 EN Version: S Status: RL (released | freigegeben | valide) printed: 01.06.2026

valvesgo.com

Cast valve body (VG)

Diaphragm size	Port connection (pipe)		Actuator size Ø	Diaphragm material	K_V value by stroke									K_{VS} value
					10 %	20 %	30 %	40 %	50 %	60 %	70 %	80 %	90 %	100 %
	DN	NPS	[mm]		[m³/h]									
DIN 11850 - 2 / DIN 11866 series A / DIN EN 10357 series A														
8	8	¼	50 (D)	EPDM	–	–	–	–	–	–	–	–	–	1
				PTFE	–	–	–	–	–	–	–	–	–	1.5
15	15	½	70 (M)	EPDM	0.1	0.2	1.0	2.0	3.0	3.7	4.4	5.1	5.3	5.6
				PTFE	0.5	1.2	1.9	2.6	3.5	4.0	4.5	4.8	5.0	5.3
20	20	¾	70 (M)	EPDM	0.1	0.3	2.2	4.2	6.1	7.6	8.8	9.8	10.5	10.7
				PTFE	0.6	1.1	2.5	3.9	6.3	7.9	8.6	9.5	10.3	10.5
25	25	1	70 (M), 90 (N)	EPDM	0.7	1.5	3.7	6.3	8.6	10.5	12.2	13.0	14.1	14.6
				PTFE	0.4	0.7	2.3	4.2	6.2	8.2	9.9	11.9	13.0	13.6
40	40	1½	90 (N), 130 (P)	EPDM	1.9	8.1	15.3	21.5	23.5	26.0	29.0	32.0	34.0	35.0
				PTFE	2.2	8.2	15.4	21.5	24.5	26.0	29.0	31.5	33.5	35.0
50	50	2	130 (P)	EPDM	4.2	10.4	21.0	29.0	35.0	38.0	41.0	43.5	46.0	47.0
				PTFE	3.6	11.5	20.5	30.5	36.0	39.5	42.0	45.0	47.5	48.0
65	65	2½	130 (P), 225 (L)	EPDM, PTFE	3.1	25.0	35.0	42.0	47.5	53	57	61	63	65
80	80	3	225 (L)	EPDM, PTFE	13.2	42.0	63	74	81	89	94	98	99	100
100	100	4	225 (L)	EPDM, PTFE	8.9	38.0	74	98	121	141	157	167	175	180

Plastic valve body (PW, PV, PP, PD)

Diaphragm size	Port connection (pipe)		Actuator size Ø	Diaphragm material	K_V value by stroke									K_{VS} value
					10 %	20 %	30 %	40 %	50 %	60 %	70 %	80 %	90 %	100 %
	DN	NPS	[mm]		[m³/h]									
DIN 11850 - 2 / DIN 11866 series A / DIN EN 10357 series A														
15	15	½	70 (M)	EPDM	0.0	0.4	0.9	2.1	3.7	5.4	6.7	7.6	7.9	8.1
				PTFE	0.4	0.8	1.2	2.0	3.1	4.6	5.7	6.5	7.0	7.2
20	20	¾	70 (M)	EPDM	0.0	0.5	1.1	3.0	5.7	8.4	10.7	12.2	13.2	13.8
				PTFE	0.1	0.7	1.3	2.7	4.6	6.7	8.6	10.2	11.5	12.5
25	25	1	70 (M), 90 (N)	EPDM	0.1	1.1	2.3	4.9	8.7	13.2	17.3	20.5	23.0	24.5
				PTFE	0.5	1.3	2.1	4.0	6.7	9.7	12.6	15.5	17.9	20.0
32	32	1¼	90 (N)	EPDM	0.0	1.9	3.8	9.0	16.6	23.0	28.5	32.5	35.5	37.5
				PTFE	2.0	4.1	6.4	10.1	17.8	23.5	29.0	32.5	35.0	36.5
40	40	1½	90 (N), 130 (P)	EPDM	2.8	5.6	8.7	18.7	28.5	36.0	43.0	48.0	53	57
				PTFE	2.9	5.8	8.8	17.9	27.0	35.5	42.0	47.5	52	55
50	50	2	130 (P)	EPDM	0.3	3.9	8.7	21.0	38.0	52	65	75	83	89
				PTFE	4.1	8.5	13.6	28.0	42.0	56	70	79	86	90
65	65	2½	130 (P), 225 (L)	EPDM, PTFE	2.8	21.0	33.0	42.5	49.5	54	57	59	60	61
80	80	3	225 (L)	EPDM, PTFE	8.2	35.5	56	67	77	86	94	99	103	105
100	100	4	225 (L)	EPDM, PTFE	9.9	47.0	79	107	125	129	133	136	144	150

DTS 1000450597 EN Version: S Status: RL (released | freigegeben | valide) printed: 01.06.2026

valvesgo.com

6.2. Medium pressure

Information for control function A

Note:

- For low operating pressures, optional variants with reduced spring force (EC04) are recommended.
- Pressure data [bar]: Overpressure to atmospheric pressure. Static: When closed, the valve is pressurised on one side with the maximum operating pressure.
- Information for control function B and I is available on request.

Diaphragm size	Actuator size Ø	Pilot pressure	Body material	Maximum static operating pressure for seal materials	
				EPDM, FKM	PTFE/EPDM, advanced PTFE/EPDM, laminate of GYLON® and EPDM
	[mm]	[bar]		[bar]	[bar]
8	50 (D)	3.7...10	All	10	10 1.)
15	50 (D)	5.0...10	All	10	–
	70 (M)	4.8...10	All	10	10
20	70 (M)	4.8...10	All	10	10
25	70 (M)	4.8...10	All	10	6
	90 (N)	5.0...10	All	10	10
32	90 (N)	5.0...10	All	10	10
40	90 (N)	5.5...10	All	7.5	6 2.)
	130 (P)	5.0...7	All	10	10
50	130 (P)	5.0...7	All	10	10
65	130 (P)	5.0...7	All	7.5	5
	225 (L)	2.7...7	All	10	10
80	225 (L)	5.4...7	Stainless steel	10	10
	225 (L)	5.4...7	PP	10	7
	225 (L)	5.4...7	PVC	10	10
	225 (L)	5.4...7	PVDF	10	10
100	225 (L)	5.6...7	Stainless steel	10	10 3.)
	225 (L)	5.6...7	PP	10	9
	225 (L)	5.6...7	PVC	10	9
	225 (L)	5.6...7	PVDF	10	9

1.) Variant is only available with reinforced spring pack
2.) Laminate of GYLON® and EPDM (ER diaphragm) is not available.
3.) The maximum operating pressure for advanced PTFE/EPDM (EU diaphragms) is 9 bar.

DTS 1000450597 EN Version: S Status: RL (released | freigegeben | valide) printed: 01.06.2026

valvesgo.com

7. Product accessories

Electrical position indicator

Control head

Type 8691 ▸ Actuator size Ø 70/90/130/225 mm

Type 8695 ▸ Actuator size Ø 50 mm

The control heads Type 8691 and Type 8695 are optimised for integrated mounting on process valves of the 21XX series. The valve position is detected without contact via an analogue sensor element. The sensor element automatically detects and stores the valve end positions during commissioning using the teach function. The integrated pilot valve controls single-acting or double-acting actuators. The valve switching status is indicated by coloured high-performance LEDs.

Features

- Status indication via coloured high-performance LEDs
- Wear-free inductive position sensor
- Pilot valve with manual override
- Teach function for automatic recognition of valve end positions
- Hygienic stainless steel design
- Easy-to-clean, chemically resistant housing according to IP65/67, 4X rating
- AS-Interface, IO-Link, Bürkert system bus (büS)

Customer benefits

- Simple and safe commissioning using the teach function
- Easy process monitoring and fault detection through visible coloured high-performance LEDs
- High degree of system availability due to increased actuator service life by means of spring chamber ventilation
- Minimal space requirement in plant piping for more flexibility in plant design

Pneumatic control unit/position feedback

Type 8690 ▸ Actuator size Ø 70/90/130/225 mm

Type 8697 ▸ Actuator size Ø 50 mm

The pneumatic control units Type 8690 and 8697 are optimised for integrated mounting on process valves of the 21XX series. Mechanical or inductive limit switches detect the valve position. The integrated pilot valve controls single-acting or double-acting (Type 8690) actuators.

Features

- Optical position indicator
- Mechanical or inductive proximity switches for end position detection
- Pilot valve with manual override
- Compact design
- Easy-to-clean, chemically resistant housing according to IP65/67, 4X rating
- Optionally intrinsically safe design according to ATEX/IECEx

Customer benefits

- Simple and safe commissioning using the teach function (Type 8697)
- Signal reliability due to the automatic adjustment of the limit switches
- Minimal space requirement in plant piping for more flexibility in plant design

DTS 1000450597 EN Version: S Status: RL (released | freigegeben | valide) printed: 01.06.2026

valvesgo.com

Process controller TopControl

Type 8693 ▸ Actuator size Ø 70/90/130/225 mm

The intelligent process controller Type 8693 is designed for integrated mounting on pneumatic actuators from the process control valve series Type 23xx/2103 and especially for the requirements of hygienic process conditions. Using the TUNE functions, the positioner and process controller can be initialised automatically. Easy operation and selection of additional software functions as well as parameterisation are carried out via the large graphic display and a touch keypad. Device configuration and parameterisation can also be conveniently carried out by the Bürkert Communicator software via a PC interface.

Features

- Contactless position sensor
- Universal control system for single and double acting actuators
- Highly dynamic actuating system without internal pilot air consumption in the balanced state
- Integrated diagnostic functions for valve monitoring
- Automatic initialisation of the positioner and process controller using the TUNE function
- Safeguarding in the event of failure of the electrical or pneumatic auxiliary power
- PROFIBUS DPV1, EtherNet/IP, PROFINET, Modbus TCP, Bürkert system bus (büS)
- Compact and robust hygienic stainless steel design

Customer benefits

- Quick and easy commissioning
- Intuitive and simple operation via a graphic display with backlight and touch keypad
- High system availability due to increased drive service life by means of spring chamber ventilation
- Guaranteed reliability and predictable maintenance through valve monitoring and diagnostics
- Easy maintenance and process monitoring

Positioner TopControl

Type 8692 ▸ Actuator size Ø 70/90/130/225 mm

The intelligent electropneumatic positioner Type 8692 is designed for integrated attachment to pneumatic actuators of the process control valve series Type 23xx/2103 and especially for the requirements of hygienic process conditions. The positioner can be initialised automatically using the TUNE function. Easy operation and the selection of the extensive additional software functions as well as parameterisation are carried out via the large graphic display and the touch keypad. The device configuration and parameterisation can also be conveniently carried out using the Bürkert Communicator software via a PC interface.

Features

- Contactless position sensor
- Universal positioning system for single and double-acting actuators in the balanced state
- Highly dynamic positioning system without internal pilot air consumption
- Integrated diagnostic functions for valve monitoring
- Automatic initialisation of the positioner by using the TUNE function
- Safeguard in the event of failure of the electrical or pneumatic auxiliary power
- PROFIBUS DPV1, EtherNet/IP, PROFINET, Modbus TCP, Bürkert system bus (büS)
- Compact and robust hygienic stainless steel design

Customer benefits

- Quick and easy commissioning
- Intuitive and simple operation via graphic display with backlight and touch keypad
- High system availability due to increased drive service life by means of spring chamber ventilation
- Guaranteed reliability and predictable maintenance through valve monitoring and diagnostics

DTS 1000450597 EN Version: S Status: RL (released | freigegeben | valide) printed: 01.06.2026

valvesgo.com

Positioner TopControl BASIC

Type 8694 ▸ Actuator size Ø 70/90/130/225 mm

The compact positioner Type 8694/8696 is designed for integrated attachment to pneumatic actuators of the Type 23xx/2103 process control valve series and especially for the requirements of hygienic process conditions. Operation and parameterisation are performed via push buttons and DIP switches. The device configuration and parameterisation can also be conveniently carried out using the Bürkert Communicator software via a PC interface.

Features

- Contactless position sensor
- Universal positioning system for single and double-acting actuators
- Ultra dynamic positioning system without internal pilot air consumption
- AS-Interface, IO-Link, Bürkert system bus (büS) (only 8694)
- Compact and robust hygienic stainless steel design

Type 8696 ▸ Actuator size Ø 50 mm

Customer benefits

- Simple and safe commissioning using the Teach function
- Minimum space requirement in the plant pipework for more flexibility in plant design
- High system availability due to increased drive service life by means of spring chamber ventilation

Process controller SideControl Remote

Type 8793 ▸ with remote sensor 8798 ▸ Actuator size Ø 70/90/130/225 mm

The intelligent digital positioner and process controller Type 8793 is designed for mounting on lift or swivel drives with standardisation in accordance with IEC 534 - 6 or VDI/VDE 3845 for demanding control tasks. The variant with remote position sensor Type 8798 is used to control Bürkert process control valves. It is operated via a graphic display with backlight. The initialisation of the positioner and process controller can be done automatically using the TUNE function. The type of controlled system is automatically recognised and the appropriate controller structure with the corresponding optimum parameter set is determined.

Features

- Universal control system for single and double acting actuators
- Integrated diagnostic functions for valve monitoring
- Automatic initialisation of the position and process controller using the TUNE function
- Ultra-dynamic actuating system without internal pilot air consumption in controlled state
- Illuminated graphic display with backlight and touch keypad
- PROFIBUS DPV1, EtherNet/IP, PROFINET, Modbus TCP, Bürkert system bus (büS)
- Compact and robust design
- Adaptation according to IEC 534 - 6 resp. VDI/VDE 3845 for linear and rotary actuators or as remote variant on Bürkert process valves

Customer benefits

- Quick and easy commissioning
- Intuitive and simple operation via graphic display with backlight and touch keypad
- Guaranteed reliability and scheduled maintenance thanks to valve monitoring and diagnostics
- Easy maintenance and process monitoring
- Long service life

DTS 1000450597 EN Version: S Status: RL (released | freigegeben | valide) printed: 01.06.2026

valvesgo.com

Positioner SideControl Remote

Positioner Type 8792 ▸ with remote sensor Type 8798 ▸ Actuator size Ø 70/90/130/225 mm

The intelligent digital positioner and process controller Type 8792 is designed for attachment to linear and rotary actuators with standardisation according to IEC 534 - 6 or VDI/VDE 3845 for demanding control tasks. The Type 8798 variant with remote position sensor is used to control Bürkert process control valves. It is operated via a graphic display with backlight. The initialisation of the positioner and process controller can be done automatically by using the TUNE function.

Features

- Illuminated graphic display with backlight and touch keypad
- Universal control system for single and double acting actuators
- Ultra-dynamic actuating system without internal pilot air consumption in controlled state
- Integrated diagnostic functions for valve monitoring
- PROFIBUS DPV1, EtherNet/IP, PROFINET, Modbus TCP, Bürkert system bus (büS)
- Compact and robust design
- Adaptation according to IEC 534 - 6 resp. VDI/VDE 3845 for linear and rotary actuators or as remote variant on Bürkert process valves

Customer benefits

- Quick and easy commissioning
- Intuitive and simple operation via a graphic display with backlight and touch keypad
- Guaranteed reliability and scheduled maintenance thanks to valve monitoring and diagnostics
- Long service life

Positioner SideControl BASIC Remote

Positioner Type 8791 ▸ with remote sensor Type 8798 ▸ Actuator size Ø 70/90/130/225 mm

The intelligent digital positioner and process controller Type 8791/8798 is designed for mounting on linear and rotary actuators with standardisation according to IEC 534 - 6 or VDI/VDE 3845 for demanding control tasks. The variant with remote position sensor Type 8798 is used to control Bürkert process control valves. It is operated via a graphic display with backlighting. The positioner and process controller can be initialised automatically using the TUNE functions.

Positioner IP20 Type 8791 ▸ with remote sensor Type 8798 ▸ Actuator size Ø 70/90/130/225 mm

Features

- Simple design
- Universal control system for single and double acting actuators
- Highly dynamic actuating system without internal pilot air consumption in the balanced state
- Adaptation according to IEC 534 - 6 resp. VDI/VDE 3845 for linear and rotary actuators or as remote variant on Bürkert process valves
- AS-Interface, IO-Link, Bürkert system bus (büS) (only for positioner Type 8791 BASIC Remote)

Customer benefits

- Simple commissioning
- Simple device for simple control tasks
- Low energy consumption

DTS 1000450597 EN Version: S Status: RL (released | freigegeben | valide) printed: 01.06.2026

valvesgo.com

8. Networking and combination with other Bürkert products

8.1. Possible combinations

For ELEMENT valve system Type 8802-DF with TopControl

Note:
The **continuous ELEMENT valve system Type 8802-DF** consists of a **diaphragm valve Type 2103** and a digital electropneumatic **positioner Type 8692** (for valve actuator size Ø 70/90/130/225 mm), a digital electropneumatic **process controller Type 8693** (for valve actuator size Ø 70/90/130/225 mm), a basic digital electropneumatic **positioner Type 8694** (for valve actuator size Ø 70/90/130/225 mm) or a digital electropneumatic **positioner Type 8696** (for valve actuator size Ø 50 mm).

You order two components and receive a completely assembled and tested valve.

Example:

	Process controller TopControl	Positioner TopControl		
Type 2103	**Type 8693** ▸ Digital electropneumatic process controller for the integrated mounting on process control valves	**Type 8692** ▸ Digital electropneumatic positioner for the integrated mounting on process control valves	**Type 8694** ▸ Digital electropneumatic positioner for the integrated mounting on process control valves	**Type 8696** ▸ Digital electropneumatic positioner for the integrated mounting on process control valves
	▼	▼	▼	▼
	Valve system ELEMENT			
	Valve system Type 8802-DF-J **Type 2103 + 8693** Actuator size Ø 70/90/130/225 mm	**Valve system Type 8802-DF-I** **Type 2103 + 8692** Actuator size Ø 70/90/130/225 mm	**Valve system Type 8802-DF-L** **Type 2103 + 8694** Actuator size Ø 70/90/130/225 mm	**Valve system Type 8802-DF-N** **Type 2103 + 8696** Actuator size Ø 50 mm

DTS 1000450597 EN Version: S Status: RL (released | freigegeben | valide) printed: 01.06.2026

valvesgo.com

For ELEMENT valve system Type 8802-DF with SideControl Remote

Note:
The **continuous ELEMENT valve system Type 8802-DF** with **SideControl** consists of a **diaphragm valve Type 2103** and a digital electropneumatic **SideControl process controller Type 8793** (for valve actuator size Ø 70/90/130/225 mm) or a digital electropneumatic **SideControl positioner Type 8792/8791** (for valve actuator size Ø 70/90/130/225 mm). The SideControls can only be used in combination with the position measuring system Type 8798.

You order two components and receive a completely assembled and tested valve.

Example:

	Process controller SideControl Remote	Positioner SideControl Remote	
Type 2103	**Type 8798 ▸ + 8793 ▸**	**Type 8798 ▸ + 8792 ▸**	**Type 8798 ▸ + 8791 ▸**
	Valve system ELEMENT		
	Valve system Type 8802-DF-Q **Type 2103 + 8793 + 8798** Actuator size Ø 70/90/130/225 mm	**Valve system Type 8802-DF-P** **Type 2103 + 8792 + 8798** Actuator size Ø 70/90/130/225 mm	**Valve system Type 8802-DF-O** **Type 2103 + 8791 + 8798** Actuator size Ø 70/90/130/225 mm

DTS 1000450597 EN Version: S Status: RL (released | freigegeben | valide) printed: 01.06.2026

valvesgo.com

For ELEMENT valve system Type 8801-DF with control head or pneumatic control unit/position feedback

Note:
A decentralised automated **valve system on/off ELEMENT Type 8801-DF** consists of a **diaphragm valve Type 2103** and a valve **control head Type 8691/8695** or a pneumatic **control unit Type 8690/8697**.

You order two components and receive a completely assembled and tested valve.

Example:

	Control head		Pneumatic control unit	
Typ 2103	**Type 8691** ▶ Control head for decentralised automation of ELEMENT process valves	**Type 8695** ▶ Control head for decentralised automation of ELEMENT process valves	**Type 8690** ▶ Pneumatic control for decentralised automation of ELEMENT process valves	**Type 8697** ▶ Pneumatic control for decentralised automation of ELEMENT process valves
	Valve system on/off ELEMENT		**Valve system on/off ELEMENT**	
	Valve system Type 8801-DF-H **Type 2103 + 8691** Actuator size Ø 70/90/130/225 mm	**Valve system Type 8801-DF-M** **Type 2103 + 8695** Actuator size Ø 50 mm	**Valve system Type 8801-DF-K** **Type 2103 + 8690** Actuator size Ø 70/90/130/225 mm	**Valve system Type 8801-DF-U** **Type 2103 + 8697** Actuator size Ø 50 mm

DTS 1000450597 EN Version: S Status: RL (released | freigegeben | valide) printed: 01.06.2026

valvesgo.com

9. Ordering information

9.1. Bürkert eShop

Bürkert eShop – Easy ordering and quick delivery

You want to find your desired Bürkert product or spare part quickly and order directly? Our online shop is available for you 24/7. Sign up and enjoy all the benefits.

Order online now

9.2. Bürkert product filter

Bürkert product filter – Get quickly to the right product

You want to select products comfortably based on your technical requirements?
Use the Bürkert product filter and find suitable articles for your application quickly and easily.

Try out our product filter

9.3. Bürkert Product Enquiry Form

Note:
Please see our Product Enquiry Form for a full explanation of our specification key.

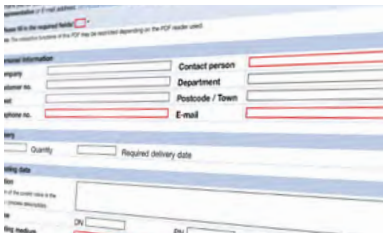

Bürkert Product Enquiry Form – Your enquiry quickly and compactly

Would you like to make a specific product enquiry based on your technical requirements? Use our Product Enquiry Form for this purpose. There you will find all the relevant information for your Bürkert contact. This will enable us to provide you with the best possible advice.

Fill out the form now

DTS 1000450597 EN Version: S Status: RL (released | freigegeben | valide) printed: 01.06.2026

valvesgo.com