bürkert
FLUID CONTROL SYSTEMS

Pneumatically operated 2-way Globe Control Valve

- Excellent control characteristics
- High cycle life and maintenance-free operation
- Flow optimised body in stainless steel
- Several K_{VS} value per port size due to removable valve seats
- Control units can be mounted directly without external tubing

Product variants described in the data sheet may differ from the product presentation and description.

Can be combined with

Type 8692
Digital electropneumatic positioner for integrated mounting on process control valves

Type 8694
Digital electropneumatic positioner for integrated mounting on process control valves

Type 8696
Digital electropneumatic positioner for integrated mounting on process control valves

Type 8693
Digital electropneumatic process controller for integrated mounting on process control valves

Type 8792
Digital electropneumatic positioner SideCONTROL

Type 8791
Digital electropneumatic positioner SideCONTROL

Type 8793
Digital electropneumatic Process Controller SideCONTROL

Type 8802
Continuous control valve systems ELEMENT – overview

Type description

In line with Bürkert's philosophy the construction of the Type 2301 globe valve fulfils tough criteria for process environments. Unrivalled cycle life and sealing integrity is guaranteed by the proven self adjusting spindle packing with exchangeable V-seals. Each globe valve body can be fitted with up to five sizes of trim sets. These parabolic trims provide a reliable and repeatable characteristic to vary the flow. The control cones are available in either stainless steel or with a durable PTFE seal or PEEK seal for tight shut-off. Leakage class III, IV or VI are available. The design enables the easy integration of automation modules whether they are digital electropneumatic positioner or process controller. The fully integrated system has a compact and smooth design, integrated pneumatic lines, IP65/67 protection class and superior chemical resistance.

DTS 1000112932 EN Version: - Status: RL (released | freigegeben | valide) printed: 06.10.2026

© Christian Bürkert GmbH & Co. KG, Subject to alteration

Visit product website

valvesgo.com

Table of contents

1. General technical data 4

2. Product variants 5

2.1. ELEMENT 5
2.2. Stainless steel drive guide for higher drive forces 5

3. Control functions 5

4. Approvals and conformities 6

4.1. General notes 6
4.2. Conformity 6
4.3. Standards 6
4.4. Explosion protection 6
4.5. Drinking water 6
4.6. Foods and beverages/Hygiene 7
4.7. Others 7
DNV GL classification 7
Oxygen 7
Fuel gases 7
Hydrogen 7
TA Luft 7

5. Materials 8

5.1. Bürkert resistApp 8
5.2. Material specifications 8
ELEMENT 8
Stainless steel for higher drive forces 9

6. Dimensions 10

6.1. Actuator 10
Continuous ELEMENT Type 2301 valve 10
Valve system Continuous ELEMENT 11
6.2. Body with flange connection 13
6.3. Body with threaded connection 14
6.4. Body with welded connection 15
6.5. Body with clamp connection 16

7. Performance specifications 17

7.1. Fluidic data 17
Flow characteristics 17
Overview of fluidic data for flow below seat (for liquids, steam and gases) 17
Pilot pressure diagrams with flow direction below seat (control function B) 21
7.2. Operating limits 22
Operating limits for medium temperature and operating pressure 22
Operating limits for ambient and medium temperature 23
Operating limits for seat seal 23
Operating limits for optional variants 24

8. Product accessories 24

9. Networking and combination with other Bürkert products 28

DTS 1000112932 EN Version: - Status: RL (released | freigegeben | valide) printed: 06.10.2026

valvesgo.com

valvesgo.com

10. Ordering information **30**

10.1. Bürkert eShop 30
10.2. Bürkert product filter 30
10.3. Bürkert Product Enquiry Form 30
10.4. Ordering chart flange connection 31
Valves with flow direction below seat 31
10.5. Ordering chart threaded connection 34
Valves with flow direction below seat 34
10.6. Ordering chart welded connection 37
Valves with flow direction below seat 37
10.7. Ordering chart clamp connection 40
Valves with flow direction below seat 40

DTS 1000112932 EN Version: - Status: RL (released | freigegeben | valide) printed: 06.10.2026

valvesgo.com

valvesgo.com

1. General technical data

Product properties	
Dimensions	Further information can be found in chapter "6. Dimensions" on page 10.
Material	Further information can be found in chapter "5. Materials" on page 8.
Design	Globe control valve
Nominal diameter (port connection)	DN 10...DN 100, NPS ⅜...NPS 4
Safety setting in case of power failure	Normally closed (control function A), normally open (control function B)
Flow direction	Flow to open (below seat)
Performance data	
Operating pressure	0...25 bar(g), 40 bar(g) on request (see "7.1. Fluidic data" on page 17) Vacuum variant...- 0.9 bar(g) (option)
Nominal pressure	PN 25/PN 40 (DIN EN 1333), Class 150 (DIN EN 1759)
Seat leakage	Leakage class III and IV (DIN EN 60534 - 4:2006) for stainless steel Leakage class VI for PTFE and PEEK (see "7.1. Fluidic data" on page 17)
K_V value	0.1 m^3/h...140 m^3/h (see "7.1. Fluidic data" on page 17)
Operating characteristic	Equal percentage, linear (others on request)
Theoretical rangeability	50:1
Medium data	
Medium	Steam, water, neutral gases, alcohols, oils, fuels, hydraulic fluids, salt solutions, organic solvents, oxygen and fuel gases of families I, II and III in accordance with the Gas Appliances Regulation (EU) 2016/426, Hydrogen (optional), lyes (optional)
Medium temperature	- 40 °C...+ 230 °C (see "7.2. Operating limits" on page 22)
Viscosity	Max. 600 mm^2/s
Control medium	Air, neutral gases
Product connections	
Port connection [2.)]	
Flange connection	DIN EN 1092 - 1 ANSI B 16.5 JIS 10K
Threaded connection	G (DIN ISO 228 - 1) NPT (ASME B1.20.1) RC (ISO 7 - 1)
Welded connection	DIN EN ISO 1127 / ISO 4200 / DIN 11866 series B DIN 11850 - 2 / DIN 11866 series A ASME BPE / DIN 11866 series C SMS 3008
Clamp connection	DIN 32676 series B (pipe: ISO 4200) DIN 32676 series A (pipe: DIN 11850 - 2) ASME BPE
Approvals and conformities	
Further information can be found in chapter "4. Approvals and conformities" on page 6	
Environment and installation	
Environmental factors	Protect the device from electromagnetic interference, UV radiation and, when used outdoors, from weather conditions.
Ambient temperature	- 10 °C...+ 80 °C (with positioner or process controller Type 8791/8792/8793) - 10 °C...+ 55 °C (with positioner or process controller Type 8692/8693/8694) (see "7.2. Operating limits" on page 22)
Degree of protection	IP65/67
Installation position	As required, preferably with actuator upright

1.) Others are available on request.

DTS 1000112932 EN Version: - Status: RL (released | freigegeben | valide) printed: 06.10.2026

valvesgo.com

valvesgo.com

2. Product variants

2.1. ELEMENT

Product properties	
Nominal diameter (port connection)	DN 10...DN 100
Actuator size	50 mm (D), 70 mm (M), 90 mm (N), 130 mm (P)
Performance data	
Pilot pressure (CF A)	5.6...7 bar(g) for control function B (see "Pilot pressure diagrams with flow direction below seat (control function B)" on page 21)

2.2. Stainless steel drive guide for higher drive forces

Product properties	
Nominal diameter (port connection)	DN 65...DN 100
Actuator size	225 mm (L)
Performance data	
Pilot pressure (CF A)	DN 65, 3.7 bar(g)...7 bar(g) DN 80, DN 100, 5.5 bar(g)...7 bar(g) 5 bar(g) for control function B (see "Pilot pressure diagrams with flow direction below seat (control function B)" on page 21)

3. Control functions

Symbol	Description	
Flow direction below seat for fluids, steam and gases		
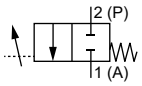	**Control function A (CF A)** Pneumatically operated 2/2-way control valve Flow direction below seat Normally closed by spring force	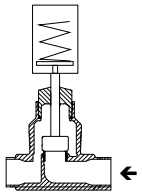
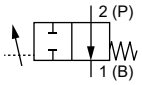	**Control function B (CF B)** Pneumatically operated 2/2-way control valve Flow direction below seat Normally opened by spring force	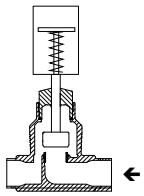

DTS 1000112932 EN Version: - Status: RL (released | freigegeben | valide) printed: 06.10.2026

valvesgo.com

valvesgo.com

4. Approvals and conformities

4.1. General notes

- The approvals and conformities listed below must be stated when making enquiries. This is the only way to ensure that the product complies with all required specifications.
- Not all available variants can be supplied with the below mentioned approvals or conformities.

4.2. Conformity

In accordance with the Declaration of Conformity, the product is compliant with the EU Directives. This includes the following directives:

- Pressure Equipment Directive 2014/68/EU
- Machinery Directive 2006/42/EC

4.3. Standards

The applied standards which are used to demonstrate compliance with the EU Directives are listed in the EU-Type Examination Certificate and/or the EU Declaration of Conformity.

4.4. Explosion protection

<table>
<tr><th>Approval</th><th>Description</th></tr>
<tr><td></td><td>
Optional: Explosion protection (valid for the variable code PX51)
As a category 2 device suitable for zone 1/21 and zone 2/22.

ATEX:
EPS 18 ATEX 2 008 X
II 2G Ex h IIC T4...T2 Gb
II 2D Ex h IIIC T135 °C...T300 °C Db

IECEx:
IECEx EPS 18.0007X
Ex h IIC T4...T2 Gb
Ex h IIIC T135 °C...T300 °C Db
<table>
<tr><td>Temperature class</td><td>T2</td><td>T3</td><td>T4</td></tr>
<tr><td>Maximum surface temperature</td><td>+ 300 °C</td><td>+ 200 °C</td><td>+ 135 °C</td></tr>
<tr><td>Ambient temperature</td><td>- 40 °C...+ 130 °C</td><td>- 40 °C...+ 130 °C</td><td>- 40 °C...+ 100 °C</td></tr>
<tr><td>Maximum medium temperature</td><td>+ 285 °C</td><td>+ 185 °C</td><td>+ 125 °C</td></tr>
</table>
Note: The ambient and medium temperature range may be limited by non-ex-relevant specifications. Observe the Operating Instructions.
</td></tr>
</table>

4.5. Drinking water

Conformity	Description
H_2O	**Suitable for use in drinking water applications** The materials comply with the assessment principles (UBA) for materials in contact with drinking water (TrinkwasserV). **Stainless steel body** PF39: Suitable for products with medium temperature up to 85 °C (hot water)

DTS 1000112932 EN Version: - Status: RL (released | freigegeben | valide) printed: 06.10.2026

valvesgo.com

4.6. Foods and beverages/Hygiene

Conformity	Description
FDA	**FDA – Code of Federal Regulations (valid for the variable code PL02, PL03)** All wetted materials are compliant with the Code of Federal Regulations published by the FDA (Food and Drug Administration, USA) according to the manufacturer's declaration.
USP	**United States Pharmacopeial Convention (USP) (valid for the variable code PL04)** All wetted materials are biocompatible according to the manufacturer's declaration.
	EC Regulation 1935/2004 of the European Parliament and of the Council (valid for the variable code PL01, PL02) All wetted materials are compliant with EC Regulation 1935/2004/EC according to the manufacturer's declaration.
	China food GB Standards of the People's Republic of China (valid for the variable code PL10) All wetted materials are compliant with the requirement of China food GB Standards according to the manufacturer's declaration.

4.7. Others

DNV GL classification

Approval	Description
TYPE APPROVED PRODUCT DNV DNV.COM/AF	**DNV GL classification – Ships, offshore units, and high speed and light craft** The products are accepted for installation on all vessels classed by DNV GL.

Oxygen

Conformity	Description
O_2	**Optional: Suitability for oxygen (valid for the variable code NL02)** The products are suitable for use with gaseous oxygen, according to the manufacturer's declaration.

Fuel gases

Conformity	Description
CE	**Fuel gases (valid for the variable code PO19, PO20)** The products comply with: • Regulation (EU) 2016/426 – Appliances burning gaseous fuels and • DVGW DIN EN 161 (Automatic shut-off valves for gas burners and gas appliances) and • DIN EN 16678, Class A or Class D (Safety and control devices for gas burners and gas burning appliances – Automatic shut-off valves for operating pressure of above 500 kPa up to and including 6 300 kPa)

Hydrogen

Conformity	Description
H_2	**Optional: Suitability for hydrogen (valid for the variable code NG18)** The products are suitable for use with gaseous hydrogen, according to the manufacturer's declaration.

TA Luft

Conformity	Description
TA Luft	**Technical instruction on air quality control (valid for the variable code PM01)**

DTS 1000112932 EN Version: - Status: RL (released | freigegeben | valide) printed: 06.10.2026

valvesgo.com

5. Materials

5.1. Bürkert resistApp

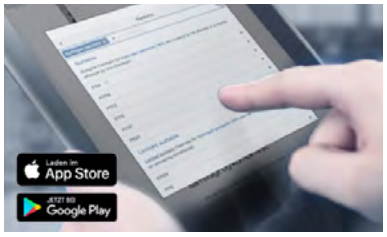

Bürkert resistApp – Chemical resistance chart

You want to ensure the reliability and durability of the materials in your individual application case? Verify your combination of media and materials on our website or in our resistApp.

Start chemical resistance check

5.2. Material specifications

ELEMENT

Note:
The Type 2301 globe control valve is supplied with different port connections (flange, thread, welded connection and clamp). These connections are not shown. They correspond to the valve body material.

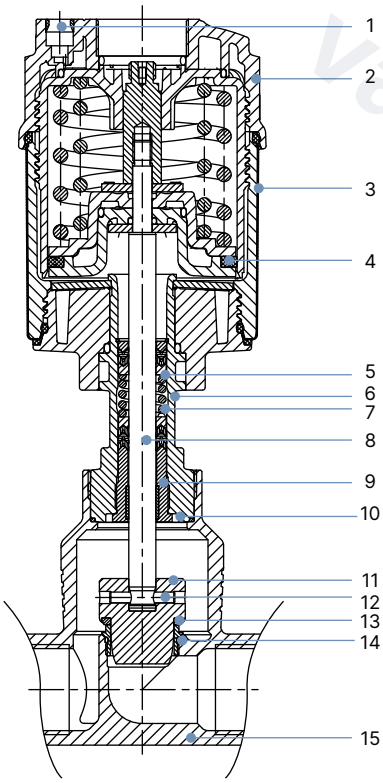

No.	Element	Material
1	Pilot air ports	Push-in connector PP
2	Actuator cover	PPS
3	Actuator casing	Stainless steel 1.4561 (316Ti)
4	Piston seal	FKM
5	Spring	Stainless steel 1.4310
6	Pipe	Stainless steel CF3M
7	Packing gland	PTFE V-Rings (filled), with spring compensation
8	Spindle	Stainless steel 1.4401 (316)/1.4404 (316L)
9	Spindle guide	Stainless steel 1.4404 (316L), PTFE filled
10	Body seal	Graphite or PTFE
11	Control cone	Stainless steel 1.4571 (optionally hardened)
12	Spring straight pin	Stainless steel 1.4310
13	Seat seal	Stainless steel 1.4571 (optionally hardened), PTFE or PEEK
14	Valve seat with o-Ring	Stainless steel 1.4571, EPDM
15	Valve body	Stainless steel 316L / CF3M

DTS 1000112932 EN Version: - Status: RL (released | freigegeben | valide) printed: 06.10.2026

valvesgo.com

Stainless steel for higher drive forces

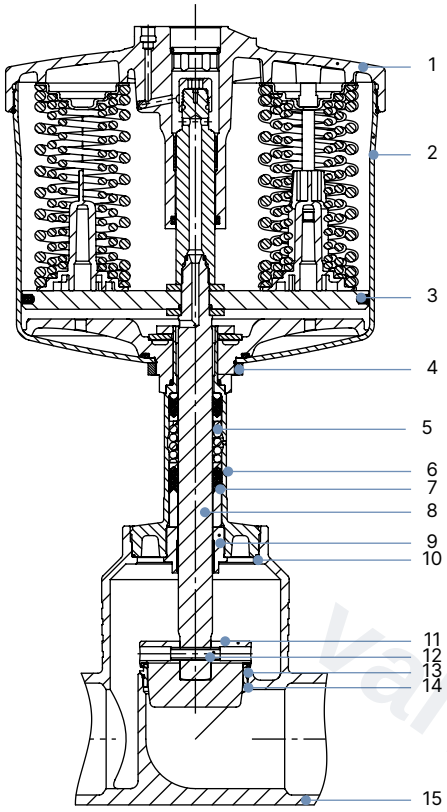

No.	Element	Material
1	Actuator cover	Stainless steel 1.4308
2	Actuator	Stainless steel 1.4404
3	Piston seal	FKM
4	Nut	Stainless steel 1.4301
5	Spring	Stainless steel 1.4310
6	Pipe	Stainless steel CF3M
7	Packing gland	PTFE V-rings (filled), with spring compensation
8	Spindle	Stainless steel 1.4021
9	Spindle guide	Stainless steel 1.4404 (316L) / PTFE filled
10	Body seal	Graphite or PTFE
11	Control cone	Stainless steel 1.4571 (optionally hardened)
12	Spring straight pin	Stainless steel 1.4310
13	Seat seal	Stainless steel 1.4571 (optionally hardened), PTFE or PEEK
14	Valve seat with o-ring	Stainless steel 1.4571, EPDM
15	Valve body	Stainless steel 316L / CF3M

DTS 1000112932 EN Version: - Status: RL (released | freigegeben | valide) printed: 06.10.2026

valvesgo.com

valvesgo.com

6. Dimensions

6.1. Actuator

Continuous ELEMENT Type 2301 valve

Note:
Dimensions in mm, unless otherwise stated

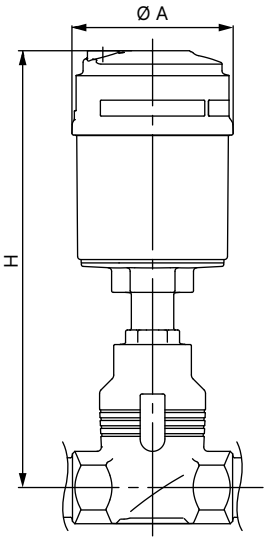

Nominal diameter (port connection)		Actuator size Ø	Ø A	H
DN	NPS			
10	⅜	50 (D)	64.5	226
		70 (M)	91	239
15	½	50 (D)	64.5	226
		70 (M)	91	239
20	¾	50 (D)	64.5	232
		70 (M)	91	245
		90 (N)	120	307
25	1	50 (D)	64.5	235
		70 (M)	91	248
		90 (N)	120	301
32	1¼	90 (N)	120	329
		130 (P)	159	381
40	1½	90 (N)	120	334
		130 (P)	159	386
50	2	90 (N)	120	340
		130 (P)	159	392
65	2½	130 (P)	159	446
		225 (L)	245	460
80	3	130 (P)	159	454
		225 (L)	245	467
100	4	130 (P)	159	464
		225 (L)	245	477

DTS 1000112932 EN Version: - Status: RL (released | freigegeben | valide) printed: 06.10.2026

valvesgo.com

valvesgo.com

Valve system Continuous ELEMENT

Note:

- Dimensions in mm, unless otherwise stated
- Please note actuator size A in table **"6.1. Actuator" on page 10**

With positioner TopControl			With remote positioner SideCONTROL
Type 8692 or with process controller TopControl **Type 8693**	**Type 8694**	**Type 8696**	**Type 8792** or with remote process controller SideCONTROL **Type 8793**
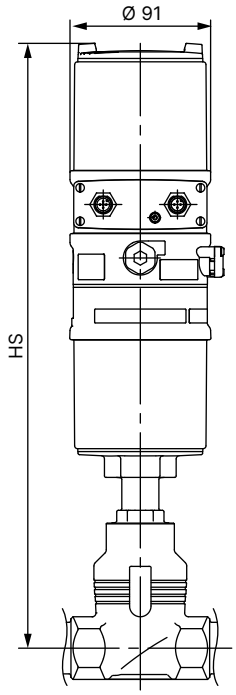	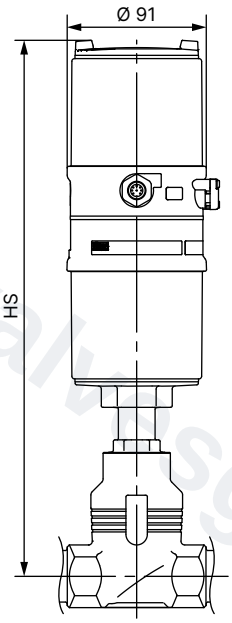	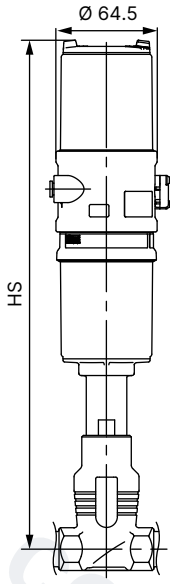	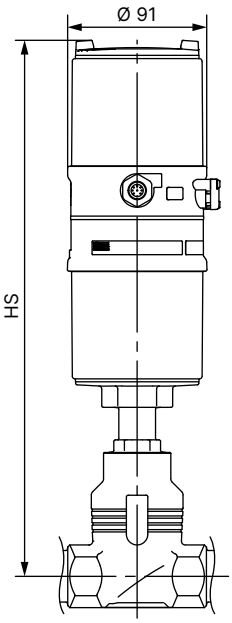

DTS 1000112932 EN Version: - Status: RL (released | freigegeben | valide) printed: 06.10.2026

valvesgo.com

Nominal diameter (port connection)		Actuator size Ø	HS with		
DN	NPS		Type 8692 or Type 8693	Type 8694 or Type 8696	Type 8792 or Type 8793
10	⅜	50 (D)	–	329	–
		70 (M)	383	342	342
15	½	50 (D)	–	329	–
		70 (M)	383	342	342
20	¾	50 (D)	–	335	–
		70 (M)	389	348	348
		90 (N)	449	405	413
25	1	50 (D)	–	342	–
		70 (M)	392	351	351
		90 (N)	445	404	404
32	1¼	90 (N)	473	432	432
		130 (P)	525	484	484
40	1½	90 (N)	478	437	437
		130 (P)	530	489	489
50	2	90 (N)	484	443	443
		130 (P)	536	495	495
65	2½	130 (P)	590	549	549
		225 (L)	603	564	564
80	3	130 (P)	598	557	557
		225 (L)	611	572	572
100	4	130 (P)	608	567	567
		225 (L)	621	582	582

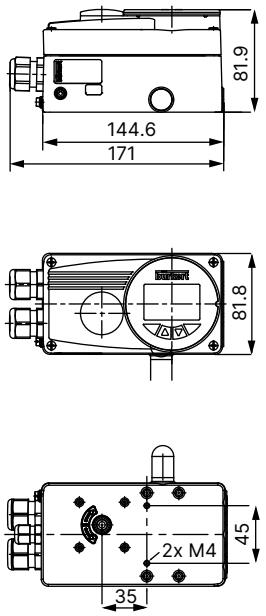

DTS 1000112932 EN Version: - Status: RL (released | freigegeben | valide) printed: 06.10.2026

valvesgo.com

valvesgo.com

6.2. Body with flange connection

Note:
Dimensions in mm, unless otherwise stated

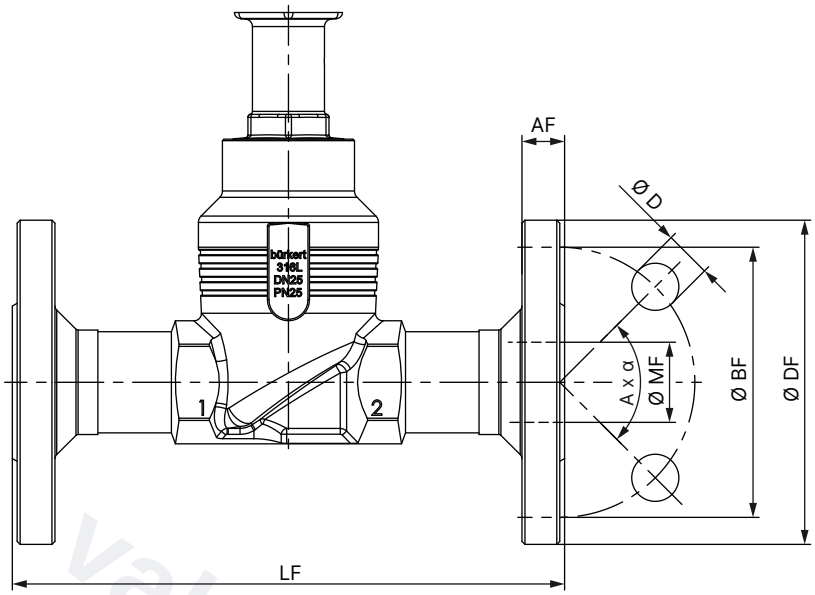

Nominal diameter (pipe)	DIN EN 1092 PN 25 FTF 1 according to DIN EN 558 - 1							JIS 10K FTF 10 according to DIN EN 558 - 2						
DN	Ø DF	LF	Ø BF	AF	Ø D	A x α	Ø MF	Ø DF	LF	Ø BF	AF	Ø D	A x α	Ø MF
10	90	130	60	16	14	4 × 90°	13.6	–	–	–	–	–	–	–
15	95	130	65	16	14	4 × 90°	18.1	95	108	70	12	15	4 × 90°	18.1
20	105	150	75	18	14	4 × 90°	23.7	100	117	75	14	15	4 × 90°	23.7
25	115	160	85	18	14	4 × 90°	29.7	125	127	90	14	19	4 × 90°	29.7
32	140	180	100	18	18	4 × 90°	38.4	135	140	100	16	19	4 × 90°	38.4
40	150	200	110	18	18	4 × 90°	44.3	140	165	105	16	19	4 × 90°	44.3
50	165	230	125	20	18	4 × 90°	56.3	155	203	120	16	19	4 × 90°	56.3
65	185	290	145	22	18	8 × 45°	66.0	175	216	140	18	19	4 × 90°	71.5
80	200	310	160	24	18	8 × 45°	81.0	185	241	150	18	19	8 × 45°	84.3
100	235	350	190	24	22	8 × 45°	100.0	210	292	175	18	19	8 × 45°	109.1

Nominal diameter (pipe)	ANSI B 16.5 Class 150 FTF 37 according to DIN EN 558 - 2						
NPS	Ø DF	LF	Ø BF	AF	Ø D	A x α	Ø MF
½	89	184	60.5	11.2	15.7	4 × 90°	15.7
¾	99	184	69.9	12.7	15.7	4 × 90°	20.8
1	108	184	79.2	14.2	15.7	4 × 90°	26.7
1½	127	222	98.6	17.5	15.7	4 × 90°	40.9
2	152	254	120.7	19.1	19.1	4 × 90°	52.6
2½	178	276	139.7	22.3	19.1	4 × 90°	62.7
3	190	298	152.5	23.9	19.1	4 × 90°	78.0
4	229	352	190.5	23.9	19.1	8 × 45°	102.4

DTS 1000112932 EN Version: - Status: RL (released | freigegeben | valide) printed: 06.10.2026

valvesgo.com

6.3. Body with threaded connection

Note:
Dimensions in mm, unless otherwise stated

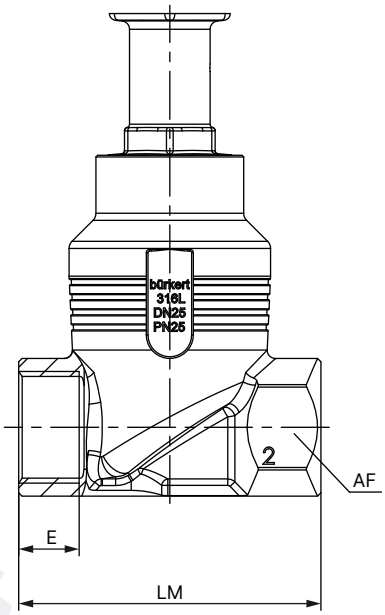

Nominal diameter (port connection)		G (DIN ISO 228 - 1) NPT (ASME B1.20.1) RC (ISO 7 - 1)				
		E			LM	AF
DN	NPS	G	NPT	RC		
10	⅜	12	10.3	10.1	65	27
15	½	14	13.7	13.2	65	27
20	¾	16	14	14.5	75	34
25	1	18	16.8	16.8	90	41
32	1¼	20	17.3	19.1	110	50
40	1½	22	17.3	19.1	120	55
50	2	24	17.6	23.4	150	70
65	2½	26	23.7	26.7	185	85
80	3	28	30.5	29.8	205	100
100	4	32	33	35.8	240	125

DTS 1000112932 EN Version: - Status: RL (released | freigegeben | valide) printed: 06.10.2026

valvesgo.com

6.4. Body with welded connection

Note:
Dimensions in mm, unless otherwise stated

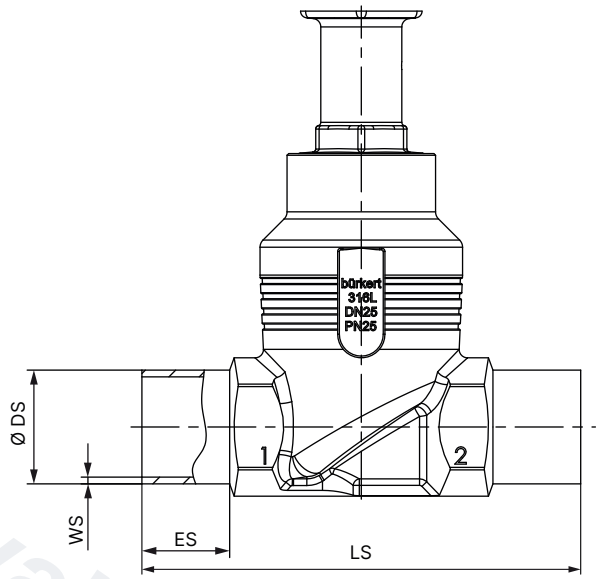

Nominal diameter (port connection)	ES	LS	DIN EN ISO 1127 - 1 / ISO 4200 / DIN 11866 series B		DIN 11850 - 2 / DIN 11866 series A / DIN EN 10357 series A	
DN			Ø DS	WS	Ø DS	WS
10	20	90	17.2	1.6	13	1.5
15	20	90	21.3	1.6	19	1.5
20	20	100	26.9	1.6	23	1.5
25	26	130	33.7	2.0	29	1.5
32	26	140	42.4	2.0	35	1.5
40	26	150	48.3	2.0	41	1.5
50	26	175	60.3	2.0	53	1.5
65	26	210	76.1	2.3	70	2.0
80	26	230	88.9	2.3	85	2.0
100	26	260	114.3	2.6	104	2.0

Nominal diameter (port connection)	ES	LS	ASME BPE / DIN 11866 series C	
NPS			Ø DS	WS
½	20	90	12.7	1.65
¾	20	90	19.05	1.65
1	20	100	25.4	1.65
1½	26	140	38.1	1.65
2	26	150	50.8	1.65
2½	26	175	63.5	1.65
3	26	210	76.2	1.65
4	26	260	101.6	2.11

Nominal diameter (port connection)	ES	LS	SMS 3008	
NPS			Ø DS	WS
20	20	100	25	1.2
32	26	140	38	1.2
40	26	175	51	1.2
50	26	175	63.5	1.6
65	26	210	76.1	1.6
100	26	260	101.5	2

DTS 1000112932 EN Version: - Status: RL (released | freigegeben | valide) printed: 06.10.2026

valvesgo.com

6.5. Body with clamp connection

Note:
Dimensions in mm, unless otherwise stated

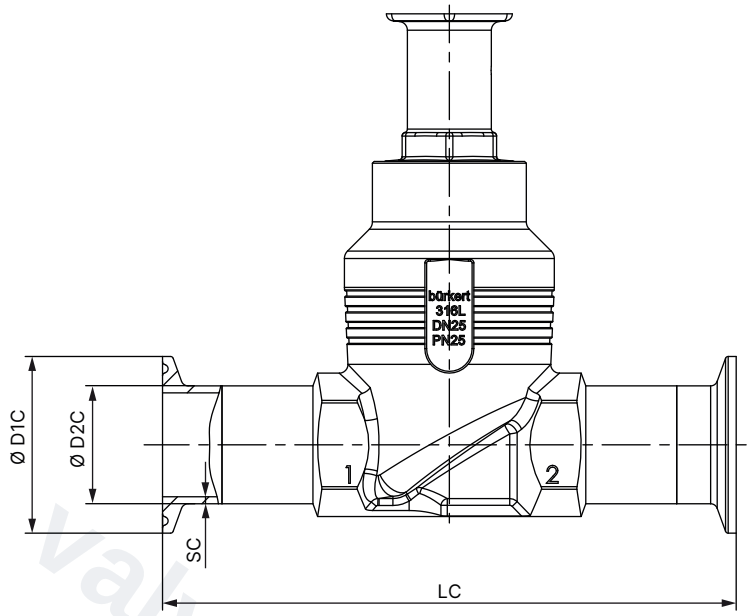

Nominal diameter (port connection)	Clamp: DIN 32676 series A Pipe: DIN 11850 - 2 / DIN 11866 series A / DIN EN 10357 series A				Clamp: DIN 32676 series B Pipe: DIN EN ISO 1127 / ISO 4200 / DIN 11866 series B			
DN	**LC**	**Ø D2 C**	**Ø D1 C**	**SC**	**LC**	**Ø D2 C**	**Ø D1 C**	**SC**
15	126	19	34	1.5	146	21.3	50.5	1.6
20	136	23	34	1.5	136	26.9	50.5	1.6
25	173	29	50.5	1.5	164	33.7	50.5	2.0
40	193	41	50.5	1.5	193	48.3	64.0	2.0
50	218	53	64	1.5	218	60.3	77.5	2.0

Nominal diameter (port connection)	Clamp: ASME BPE / DIN 11866 series C Pipe: ASME BPE / DIN 11866 series C			
NPS	**LC**	**Ø D2 C**	**Ø D1 C**	**SC**
½	122	12.7	25.0	1.65
¾	126	19.05	25.0	1.65
1	126	25.4	50.5	1.65
1½	172	38.1	50.5	1.65
2	182	50.8	64.0	1.65
2½	231	63.5	77.5	1.65
3	265	76.2	91.0	1.65
4	315	101.6	119.0	2.11

DTS 1000112932 EN Version: - Status: RL (released | freigegeben | valide) printed: 06.10.2026

valvesgo.com

7. Performance specifications

7.1. Fluidic data

Flow characteristics

- Equal-percentage flow characteristic according to DIN EN 60534 - 2 - 4 (linear characteristic curve on request)
- K_{VR} value at 5 % of the stroke for seat size > 10 mm
  K_{VR} value at 10 % of the stroke for seat size ≤ 10 mm
- Actuator size 70 offers a better control quality compared to actuator size 50 and is therefore preferred
  (K_{VR} value = smallest K_V value, at which the tilt tolerance according to DIN EN 60534 - 2 - 4 is still maintained).

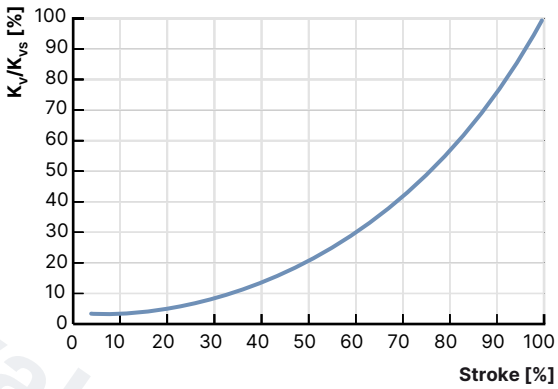

Equal percentage flow curve - detailed values please see below

Overview of fluidic data for flow below seat (for liquids, steam and gases)

Note:

- K_V value [m³/h]: measurement with water according to DIN EN 60534 - 2 - 4
- Operating limits (see "7.2. Operating limits" on page 22)

Nominal diameter (port connection)		Seat size	Actuator size Ø	Operating pressure max. (Seat leakage class)			Theoretical rangeability	K_V value water at stroke [m³/h]										K_{VS} value
				Seat seal														
				CF A														
				Stainless steel	PTFE	PEEK		5 %	10 %	20 %	30 %	40 %	50 %	60 %	70 %	80 %	90 %	100 %
DN	NPS		[mm]	[bar(g)]				[m³/h]										
10	⅜ [2.)]	3	50 (D)	16 (IV)	–	–	20:1	–	0.005	0.009	0.013	0.019	0.026	0.034	0.044	0.060	0.077	0.1
			70 (M)	25 (IV) 40 (IV) [4.)]														
		3	50 (D)	16 (IV)			20:1	–	0.009	0.015	0.023	0.033	0.046	0.063	0.085	0.11	0.16	0.2
			70 (M)	25 (IV) 40 (IV) [4.)]														
		4	50 (D)	16 (IV)			30:1	–	0.023	0.033	0.049	0.070	0.097	0.14	0.18	0.26	0.35	0.5
			70 (M)	25 (IV) 40 (IV) [4.)]														
		6	50 (D)	16 (IV)	16 (VI)	10 (VI)	50:1	0.019	0.026	0.046	0.072	0.11	0.17	0.25	0.39	0.57	0.85	1.25
			70 (M)	25 (IV) 40 (IV) [4.)]	25 (IV) 40 (IV) [4.)]	25 (VI)												
		8	50 (D)	16 (IV)	16 (VI)	10 (VI)		0.060	0.070	0.090	0.12	0.18	0.26	0.42	0.61	0.92	1.5	2.0
			70 (M)	25 (IV) 40 (IV) [4.)]	25 (IV) 40 (IV) [4.)]	25 (VI)												
		10	50 (D)	16 (IV)	16 (VI)	10 (VI)		0.090	0.11	0.13	0.19	0.30	0.48	0.73	1.0	1.6	2.3	2.7
			70 (M)	25 (IV) 40 (IV) [4.)]	25 (IV) 40 (IV) [4.)]	25 (VI)												

DTS 1000112932 EN Version: - Status: RL (released | freigegeben | valide) printed: 06.10.2026

valvesgo.com

Nominal diameter (port connection)		Seat size	Actuator size Ø	Operating pressure max. (Seat leakage class)			Theoretical rangeability	K_V value water at stroke [m³/h]										K_{VS} value
				Seat seal														
				CF A														
				Stainless steel	PTFE	PEEK		5 %	10 %	20 %	30 %	40 %	50 %	60 %	70 %	80 %	90 %	100 %
DN	NPS		[mm]	[bar(g)]				[m³/h]										
15	½ [2.)]	3	50 (D)	16 (IV)	–	–	20:1	–	0.005	0.009	0.013	0.019	0.026	0.034	0.044	0.060	0.077	0.1
			70 (M)	25 (IV) 40 (IV) [4.)]														
		3	50 (D)	16 (IV)			20:1	–	0.009	0.015	0.023	0.033	0.046	0.063	0.085	0.11	0.16	0.2
			70 (M)	25 (IV) 40 (IV) [4.)]														
		4	50 (D)	16 (IV)			30:1	–	0.023	0.033	0.049	0.070	0.097	0.14	0.18	0.26	0.35	0.5
			70 (M)	25 (IV) 40 (IV) [4.)]														
		6	50 (D)	16 (IV)	16 (VI)	10 (VI)	50:1	0.019	0.026	0.046	0.072	0.11	0.17	0.25	0.39	0.57	0.85	1.25
			70 (M)	25 (IV) 40 (IV) [4.)]	25 (VI) 40 (VI) [4.)]	25 (VI)												
		8	50 (D)	16 (IV)	16 (VI)	10 (VI)		0.070	0.080	0.11	0.13	0.19	0.27	0.43	0.63	0.95	1.6	2.1
			70 (M)	25 (IV) 40 (IV) [4.)]	25 (VI) 40 (VI) [4.)]	25 (VI)												
		10	50 (D)	16 (IV)	16 (VI)	10 (VI)		0.090	0.11	0.15	0.19	0.31	0.49	0.75	1.1	1.7	2.5	3.1
			70 (M)	25 (IV) 40 (IV) [4.)]	25 (VI) 40 (VI) [4.)]	25 (VI)												
		15	50 (D)	16 (IV)	16 (VI)	10 (VI)		0.14	0.17	0.22	0.35	0.52	0.80	1.2	1.8	2.7	3.7	4.3
			70 (M)	25 (IV) 40 (IV) [4.)]	25 (VI) 40 (VI) [4.)]	25 (IV)												
20	¾ [2.)]	10	50 (D)	16 (IV)	16 (VI)	10 (VI)		0.11	0.12	0.16	0.20	0.33	0.52	0.77	1.2	1.8	2.6	3.2
			70 (M)	25 (IV) 40 (IV) [4.)]	25 (VI) 40 (VI) [4.)]	10 (VI)												
		15	50 (D)	16 (IV)	16 (VI)	10 (VI)		0.14	0.17	0.22	0.35	0.52	0.80	1.2	1.8	2.9	4.0	5.2
			70 (M)	25 (IV) 40 (IV) [4.)]	25 (VI) 40 (VI) [4.)]	25 (VI)												
		20	70 (M)	16 (IV)	16 (VI)	10 (VI)		0.20	0.25	0.30	0.45	0.70	1.1	1.6	2.4	3.5	5.2	7.1
			90 (N)	25 (IV) 40 (IV) [4.)]	25 (VI) 40 (VI) [4.)]	25 (VI)												

DTS 1000112932 EN Version: - Status: RL (released | freigegeben | valide) printed: 06.10.2026

valvesgo.com

Nominal diameter (port connection)		Seat size	Actuator size Ø	Operating pressure max. (Seat leakage class)			Theoretical rangeability	K_V value water at stroke [m³/h]										K_{VS} value
				Seat seal														
				CF A														
				Stainless steel	PTFE	PEEK		5 %	10 %	20 %	30 %	40 %	50 %	60 %	70 %	80 %	90 %	100 %
DN	NPS		[mm]	[bar(g)]				[m³/h]										
25	1	3	50 (D)	16 (IV)	–	–	20:1	–	0.005	0.009	0.013	0.019	0.026	0.034	0.044	0.060	0.077	0.1
			70 (M)	25 (IV) 40 (IV) 4.)														
		3	50 (D)	16 (IV)			20:1	–	0.009	0.015	0.023	0.033	0.046	0.063	0.085	0.11	0.16	0.2
			70 (M)	25 (IV) 40 (IV) 4.)														
		4	50 (D)	16 (IV)			30:1	–	0.023	0.033	0.049	0.070	0.097	0.14	0.18	0.26	0.35	0.5
			70 (M)	25 (IV) 40 (IV) 4.)														
		6	50 (D)	16 (IV)	16 (VI)	10 (VI)	50:1	0.019	0.026	0.046	0.072	0.11	0.17	0.25	0.39	0.57	0.85	1.25
			70 (M)	25 (IV) 40 (IV) 4.)	25 (VI) 40 (VI) 4.)	25 (VI)												
		8	50 (D)	16 (IV)	16 (VI)	10 (VI)		0.070	0.080	0.11	0.13	0.19	0.27	0.43	0.63	0.95	1.6	2.1
			70 (M)	25 (IV) 40 (IV) 4.)	25 (VI) 40 (VI) 4.)	25 (VI)												
		10	50 (D)	16 (IV)	16 (VI)	10 (VI)		0.11	0.12	0.16	0.20	0.33	0.52	0.77	1.2	1.8	2.6	3.2
			70 (M)	25 (IV) 40 (IV) 4.)	25 (VI) 40 (VI) 4.)	25 (VI)												
		15	50 (D)	16 (IV)	16 (VI)	10 (VI)		0.14	0.17	0.22	0.35	0.52	0.80	1.2	1.8	2.9	4.1	5.3
			70 (M)	25 (IV) 40 (IV) 4.)	25 (VI) 40 (VI) 4.)	25 (VI)												
		20	70 (M)	16 (IV)	16 (VI)	10 (VI)		0.20	0.25	0.31	0.47	0.70	1.1	1.6	2.5	3.8	5.4	7.2
			90 (N)	25 (IV) 40 (IV) 4.)	25 (VI) 40 (VI) 4.)	25 (VI)												
		25	70 (M)	12 (IV)	12 (VI)	7 (VI)		0.35	0.38	0.65	1.0	1.5	2.2	3.4	5.1	7.0	9.4	12.0
			90 (N)	25 (IV)	25 (VI)	20 (VI)												
32	1¼ 2.)	20	90 (N)	25 (IV)	25 (VI)	25 (VI)		0.21	0.24	0.32	0.43	0.60	0.85	1.2	1.6	2.3	3.3	4.8
			130 (P)			25 (VI)		0.22	0.25	0.35	0.50	0.70	1.1	1.6	2.5	3.8	5.8	8.0
		25	90 (N)			20 (VI)		0.38	0.45	0.65	0.93	1.3	1.8	2.6	3.7	5.1	6.7	8.9
			130 (P)			25 (VI)		0.40	0.47	0.73	1.1	1.6	2.5	3.7	5.4	7.5	10.3	13.0
		32	90 (N)	16 (IV)	16 (VI)	10 (VI)		0.45	0.58	0.80	1.1	1.7	2.5	3.5	4.9	7.0	10.1	13.4
			130 (P)	25 (IV)	25 (VI)	20 (VI)		0.48	0.60	0.85	1.3	2.1	3.1	4.5	6.8	10.2	14.0	17.8
40	1½ 2.)	25	90 (N)	25 (IV)	25 (VI)	10 (VI)		0.38	0.47	0.68	0.95	1.4	1.9	2.7	3.7	5.2	7.2	9.4
			130 (P)			25 (VI)		0.40	0.50	0.75	1.1	1.7	2.6	3.8	5.6	8.0	10.7	13.6
		32	90 (N)	16 (IV)	16 (VI)	10 (VI)		0.45	0.55	0.80	1.1	1.7	2.5	3.6	5.0	7.2	10.8	14.4
			130 (P)	25 (IV)	25 (VI)	20 (VI)		0.48	0.60	0.85	1.3	2.1	3.2	4.6	6.9	11.0	15.0	20.0
		40	90 (N)	12 (IV)	12 (VI)	7 (VI)		0.55	0.67	1.0	1.5	2.3	3.2	4.5	6.5	9.5	13.7	17.5
			130 (P)	25 (IV)	25 (VI)	20 (VI)		0.60	0.70	1.1	1.7	2.7	4.0	6.0	9.2	13.8	18.2	24.0

DTS 1000112932 EN Version: - Status: RL (released | freigegeben | valide) printed: 06.10.2026

valvesgo.com

Nominal diameter (port connection)		Seat size	Actuator size Ø	Operating pressure max. (Seat leakage class)			Theoretical rangeability	K_V value water at stroke [m³/h]										K_{VS} value
				Seat seal														
				CF A														
				Stainless steel	PTFE	PEEK		5 %	10 %	20 %	30 %	40 %	50 %	60 %	70 %	80 %	90 %	100 %
DN	NPS		[mm]	[bar(g)]				[m³/h]										
50	2 2.)	20	90 (N)	25 (20 1.) (IV)	–	–	50:1	–	0.12	0.23	0.33	0.47	0.67	0.96	1.4	1.9	2.7	3.8
			130 (P)	25 (20 1.) (IV)					0.14	0.25	0.38	0.57	0.85	1.3	1.9	2.8	4.1	6.3
		32	90 (N)	16 (IV)					0.29	0.46	0.66	0.95	1.3	1.9	2.7	3.7	5.2	7.4
			130 (P)	25 (20 1.) (IV)					0.31	0.51	0.76	1.1	1.7	2.5	3.6	5.3	7.9	12.0
		32	90 (N)	16 (IV)	16 (VI)	10 (VI)		0.45	0.56	0.80	1.1	1.7	2.5	3.6	5.0	7.2	11.4	15.3
			130 (P)	25 (20 1.) (IV)	25 (20 1.) (VI)	20 (VI)		0.48	0.60	0.90	1.3	2.1	3.2	4.6	6.9	11.6	16.0	21.0
		40	90 (N)	12 (IV)	12 (VI)	7 (VI)		0.57	0.68	0.90	1.5	2.1	3.2	4.5	6.4	9.5	13.8	18.0
			130 (P)	25 (20 1.) (IV)	25 (20 1.) (VI)	20 (VI)		0.60	0.70	1.0	1.7	2.6	4.0	5.9	9.2	14.0	18.9	24.5
		50	90 (N)	7 (III)	7 (VI)	–		0.85	1.1	1.7	2.6	3.8	5.4	7.7	11.4	16.0	21.5	28.0
			130 (P)	25 (20 1.) (IV)	25 (20 1.) (VI)	20 (VI)		0.90	1.1	1.9	2.9	4.5	6.8	10.5	15.5	22.0	29.5	37.0
65	2 ½ 2.)	40	130 (P)	25 (15 1.) (IV)	25 (15 1.) (VI)	20 (15 1.) (VI)		0.65	0.75	1.1	1.8	2.8	4.3	6.5	10.4	16.0	22.0	29.0
		50	130 (P)					1.0	1.2	2.0	3.1	4.8	6.7	9.7	16.0	24.0	35.0	45.0
		65	130 (P)	16 (15 1.) (IV)	16 (15 1.) (VI)	10 (VI)		1.6	2.0	3.0	5.0	8.0	13.5	22.0	33.0	45.0	56	65
			225 (L) 3.)	20 (15 1.) (IV)	20 (15 1.) (VI)	12 (VI)		1.1	1.4	2.1	3.2	4.9	8.0	12.0	18.5	31.5	46.5	62
			225 (L)	25 (15 1.) (IV)	25 (15 1.) (VI)	16 (15 1.) (VI)												
80	3 2.)	50	130 (P)	25 (12.5 1.) (IV)	25 (12.5 1.) (VI)	20 (12.5 1.) (VI)		1.0	1.2	2.0	3.4	5.3	8.3	13.0	19.0	26.0	35.0	45.0
		65	130 (P)	16 (12.5 1.) (IV)	16 (12.5 1.) (VI)	10 (VI)		1.6	2.0	2.9	5.0	8.2	13.0	22.0	35.0	48.0	61	73
			225 (L) 3.)	25 (12.5 1.) (IV)	25 (12.5 1.) (VI)	16 (12.5 1.) (VI)		1.4	1.7	2.5	3.8	5.7	8.2	12.2	19.5	32.5	50	70
			225 (L)	25 (12.5 1.) (IV)	25 (12.5 1.) (VI)	20 (12.5 1.) (VI)												
		80	130 (P)	10 (IV)	10 (VI)	10 (VI)		2.5	3.4	6.3	10.7	16.0	27.0	42.5	58	73	87	100
			225 (L) 3.)	16 (12.5 1.) (IV)	16 (12.5 1.) (VI)	10 (VI)		2.1	2.6	4.2	7.0	10.5	16.0	25.0	40.0	60	83	100
			225 (L)	25 (12.5 1.) (IV)	25 (12.5 1.) (VI)	15 (12.5 1.) (VI)												
100	4	65	130 (P)	16 (10 1.) (IV)	16 (10 1.) (VI)	10 (VI)	50:1	1.4	1.8	2.8	5.0	8.8	15.0	25.0	37.0	50	64	77
			225 (L) 3.)	25 (10 1.) (IV)	25 (10 1.) (VI)	16 (10 1.) (VI)		1.4	1.7	2.6	3.8	5.7	8.3	12.6	20.0	32.0	51	75
			225 (L)	25 (10 1.) (IV)	25 (10 1.) (VI)	20 (10 1.) (VI)												
		80	130 (P)	10 (IV)	10 (VI)	10 (VI)		2.2	3.1	5.9	10.3	17.5	30.0	48.0	66	82	97	110
			225 (L) 3.)	16 (10 1.) (IV)	16 (10 1.) (VI)	10 (VI)		2.1	2.6	4.3	7.0	11.0	17.0	26.5	44.0	65	89	115
			225 (L)	25 (10 1.) (IV)	25 (10 1.) (VI)	15 (10 1.) (VI)												
		100	130 (P)	6 (IV)	6 (VI)	–		3.8	5.2	9.5	15.0	26.0	46.5	68	90	111	128	140
			225 (L) 3.)	10(IV)	10 (VI)	6 (VI)		3.2	3.9	5.7	9.0	13.5	20.5	32.0	51	83	118	140
			225 (L)	16 (10 1.) (IV)	16 (10 1.) (VI)	10 (VI)												

1.) According to the Pressure Equipment Directive 97/23/EC for compressible fluids of Group 1 (hazardous gases and vapours according to Article 3 No. 1.3 letter a first dash)
2.) Deviation for port connections according to ASME BPE: the next largest nominal diameter is used, e.g. NPS 1 instead of NPS ¾.
3.) Reduced spring force
4.) Only for housing variants with nominal pressure PN 40 (optional)

DTS 1000112932 EN Version: - Status: RL (released | freigegeben | valide) printed: 06.10.2026

valvesgo.com

Pilot pressure diagrams with flow direction below seat (control function B)

Note:
d = Seat size

Actuator size Ø 50 mm
Maximum control pressure 7 bar(g)

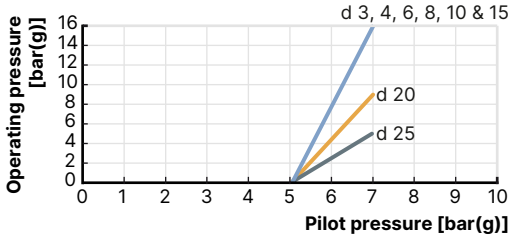

Actuator size Ø 70 mm
Maximum control pressure 7 bar(g)

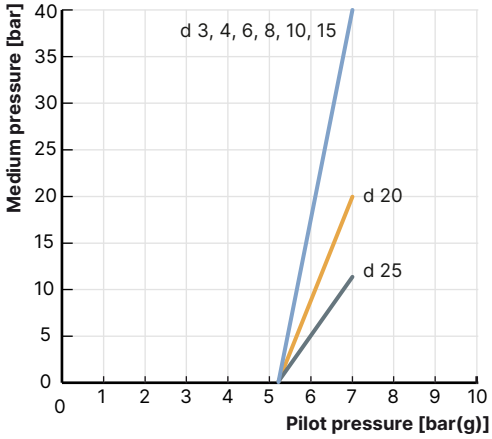

Actuator size Ø 90 mm
Maximum control pressure 7 bar(g)

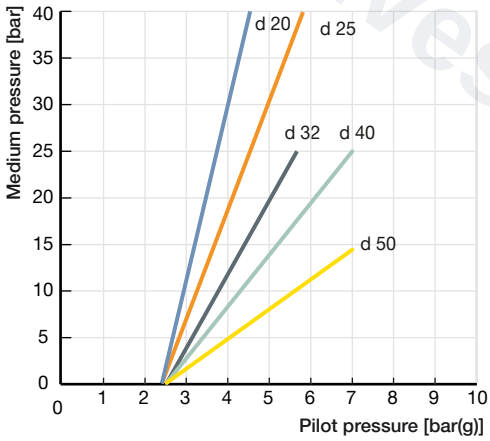

Actuator size Ø 130 mm
Maximum control pressure 7 bar(g)

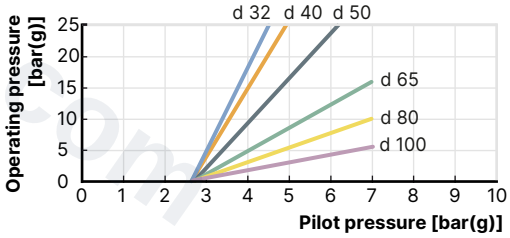

Actuator size Ø 225 mm
Maximum control pressure 5 bar(g)

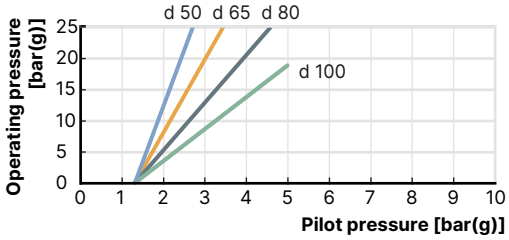

DTS 1000112932 EN Version: - Status: RL (released | freigegeben | valide) printed: 06.10.2026

valvesgo.com

7.2. Operating limits

Operating limits for medium temperature and operating pressure

In addition to the maximum operating pressures, the operating range of Bürkert process valves is limited by the nominal pressure according to the relevant standard.

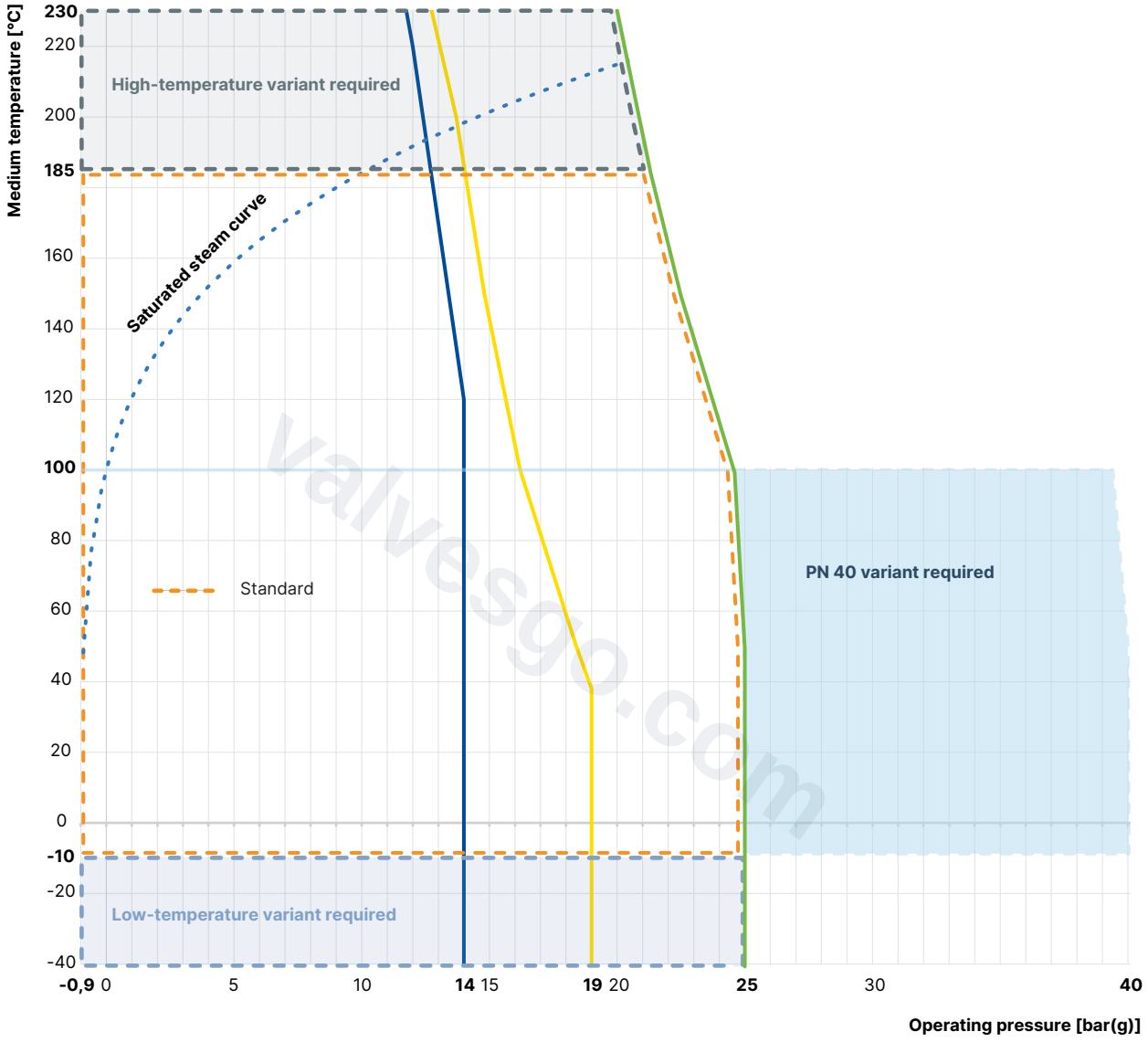

- Operating limits for PN25 according to DIN EN 12516 - 1
- Operating limits for PN40 according to DIN EN 12516 - 1
- Operating limits for flange 10K according to JIS B 2220
- Operating limits for Class 150 according to ASME B16.34
- Saturated steam curve for water

DTS 1000112932 EN Version: - Status: RL (released | freigegeben | valide) printed: 06.10.2026

valvesgo.com

Operating limits for ambient and medium temperature

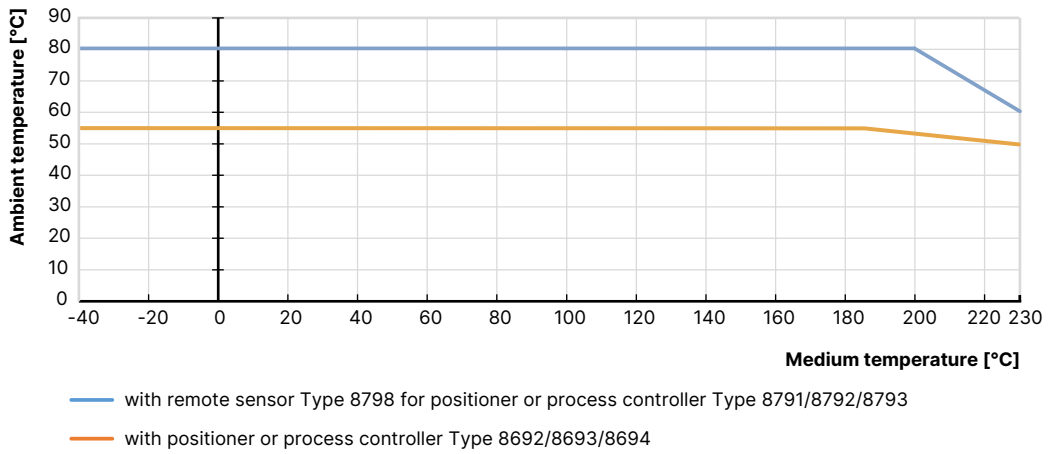

Operating limits for seat seal

Tight sealing required	Leakage class (DIN EN 60534 - 4)	Medium temperature	Seat seal
No An additional shut-off valve is recommended	III/IV (metal seals) Metal-sealed valves have larger leakages (0.1 % or 0.01 % of the nominal flow rate are permissible). Metallic seals are impervious even under demanding process conditions.	- 40...+ 230 °C	Stainless steel
	For particularly demanding process conditions such as cavitation, erosion by wet steam or abrasive media, hardened cones and seats can be used to significantly increase the service life.		Hardened stainless steel
Yes An additional shut-off valve is often unnecessary.	VI (soft seals) By using plastics as sealing material, the control valves can close tightly. Their use is not recommended in cases of increased erosion due to demanding process conditions.	- 40...+ 130 °C (recommended for ≤ + 130 °C)	PTFE
		- 10...+ 230 °C (recommended for > + 130 °C)	PEEK

DTS 1000112932 EN Version: - Status: RL (released | freigegeben | valide) printed: 06.10.2026

valvesgo.com

Operating limits for optional variants

High-temperature variant
Thanks to an adaption of the spindle seal, this variant is suitable for applications with steam, neutral gases and other heat transfer mediums up to + 230 °C.

Water variant
For applications with water up to + 200 °C, a special configuration of the spindle seal increases service life significantly. It is recommended for water temperatures starting at + 85 °C.

Drinking water variant
Wetted materials are tested in contact with the medium are tested for suitability with drinking water up to + 85 °C.

Vacuum variant
Without leakage bore, this design is suitable for pressures down to - 0.9 bar(g).

Low-temperature variant
Suitable for minimum medium temperatures down to - 40 °C

Oxygen variant
Non-metallic wetted materials are tested for suitability with oxygen and are suitable for operating pressures up to 25 bar(g) and medium temperatures up to + 60 °C. Optional variant for operating pressures up to 40 bar(g) and medium temperatures up to + 100 °C on request.

Hydrogen variant
Wetted materials are tested for suitability with hydrogen and are suitable for operating pressures up to 40 bar(g) and medium temperatures up to + 100 °C.

The hydrogen variant of Type 2301 is tested for an external tightness (stem seal and body seal) totalling 10^{-6} mbar*l/s at 40 bar, + 20 °C helium and 2.78 × 10^{-3} mbar*l/s at 40 bar, - 10 °C/+ 100 °C hydrogen. An external leak-tightness of 10^{-4} mbar*l/s is ensured when delivered.

8. Product accessories

Process controller TopControl	
Type 8693 ▸ Actuator size Ø 70/90/130/225 mm	
	The intelligent process controller Type 8693 is designed for integrated mounting on pneumatic actuators from the process control valve series Type 23xx/2103 and especially for the requirements of hygienic process conditions. Using the TUNE functions, the positioner and process controller can be initialised automatically. Easy operation and selection of additional software functions as well as parameterisation are carried out via the large graphic display and a touch keypad. Device configuration and parameterisation can also be conveniently carried out by the Bürkert Communicator software via a PC interface. **Features** • Contactless position sensor • Universal control system for single and double acting actuators • Highly dynamic actuating system without internal pilot air consumption in the balanced state • Integrated diagnostic functions for valve monitoring • Automatic initialisation of the positioner and process controller using the TUNE function • Safeguarding in the event of failure of the electrical or pneumatic auxiliary power • PROFIBUS DPV1, EtherNet/IP, PROFINET, Modbus TCP, Bürkert system bus (büS) • Compact and robust hygienic stainless steel design **Customer benefits** • Quick and easy commissioning • Intuitive and simple operation via a graphic display with backlight and touch keypad • High system availability due to increased drive service life by means of spring chamber ventilation • Guaranteed reliability and predictable maintenance through valve monitoring and diagnostics • Easy maintenance and process monitoring

DTS 1000112932 EN Version: - Status: RL (released | freigegeben | valide) printed: 06.10.2026

valvesgo.com

DTS 1000112932 EN Version: - Status: RL (released | freigegeben | valide) printed: 06.10.2026

Positioner TopControl

Type 8692 ▸ Actuator size Ø 70/90/130/225 mm

The intelligent electropneumatic positioner Type 8692 is designed for integrated attachment to pneumatic actuators of the process control valve series Type 23xx/2103 and especially for the requirements of hygienic process conditions. The positioner can be initialised automatically using the TUNE function. Easy operation and the selection of the extensive additional software functions as well as parameterisation are carried out via the large graphic display and the touch keypad. The device configuration and parameterisation can also be conveniently carried out using the Bürkert Communicator software via a PC interface.

Features

- Contactless position sensor
- Universal positioning system for single and double-acting actuators in the balanced state
- Highly dynamic positioning system without internal pilot air consumption
- Integrated diagnostic functions for valve monitoring
- Automatic initialisation of the positioner by using the TUNE function
- Safeguard in the event of failure of the electrical or pneumatic auxiliary power
- PROFIBUS DPV1, EtherNet/IP, PROFINET, Modbus TCP, Bürkert system bus (büS)
- Compact and robust hygienic stainless steel design

Customer benefits

- Quick and easy commissioning
- Intuitive and simple operation via graphic display with backlight and touch keypad
- High system availability due to increased drive service life by means of spring chamber ventilation
- Guaranteed reliability and predictable maintenance through valve monitoring and diagnostics

Positioner TopControl BASIC

Type 8694 ▸ Actuator size Ø 70/90/130/225 mm

The compact positioner Type 8694/8696 is designed for integrated attachment to pneumatic actuators of the Type 23xx/2103 process control valve series and especially for the requirements of hygienic process conditions. Operation and parameterisation are performed via push buttons and DIP switches. The device configuration and parameterisation can also be conveniently carried out using the Bürkert Communicator software via a PC interface.

Features

- Contactless position sensor
- Universal positioning system for single and double-acting actuators
- Ultra dynamic positioning system without internal pilot air consumption
- AS-Interface, IO-Link, Bürkert system bus (büS) (only 8694)
- Compact and robust hygienic stainless steel design

Customer benefits

- Simple and safe commissioning using the teach function
- Minimum space requirement in the plant pipework for more flexibility in plant design
- High system availability due to increased drive service life by means of spring chamber ventilation

Type 8696 ▸ Actuator size Ø 50 mm

valvesgo.com

Process controller SideCONTROL Remote

Type 8793 ▸ with remote sensor 8798 ▸ Actuator size Ø 70/90/130/225 mm

The intelligent digital positioner and process controller Type 8793 is designed for mounting on lift or swivel drives with standardisation in accordance with IEC 534 - 6 or VDI/VDE 3845 for demanding control tasks. The variant with remote position sensor Type 8798 is used to control Bürkert process control valves. It is operated via a graphic display with backlight. The initialisation of the positioner and process controller can be done automatically using the TUNE function. The type of controlled system is automatically recognised and the appropriate controller structure with the corresponding optimum parameter set is determined.

Features

- Universal control system for single and double acting actuators
- Integrated diagnostic functions for valve monitoring
- Automatic initialisation of the position and process controller using the TUNE function
- Ultra-dynamic actuating system without internal pilot air consumption
- Illuminated graphic display with backlight and touch keypad
- PROFIBUS DPV1, EtherNet/IP, PROFINET, Modbus TCP, Bürkert system bus (büS)
- Compact and robust design
- Adaptation according to IEC 534 - 6 or VDI/VDE 3845 for lift and swivel drives or as remote variant on Bürkert process valves

Customer benefits

- Quick and easy commissioning
- Intuitive and simple operation via graphic display with backlight and touch keypad
- Guaranteed reliability and scheduled maintenance thanks to valve monitoring and diagnostics
- Easy maintenance and process monitoring
- Long service life

Positioner SideCONTROL Remote

Positioner Type 8792 ▸ with remote sensor Type 8798 ▸ Actuator size Ø 70/90/130/225 mm

The intelligent digital positioner and process controller Type 8792 is designed for attachment to lift and swivel drives with standardisation according to IEC 534 - 6 or VDI/VDE 3845 for demanding control tasks. The Type 8798 variant with remote position sensor is used to control Bürkert process control valves. It is operated via a graphic display with backlight. The initialisation of the positioner and process controller can be done automatically by using the TUNE function.

Features

- Illuminated graphic display with backlight and touch keypad
- Universal control system for single and double acting actuators
- Ultra-dynamic actuating system without internal pilot air consumption
- Integrated diagnostic functions for valve monitoring
- PROFIBUS DPV1, EtherNet/IP, PROFINET, Modbus TCP, Bürkert system bus (büS)
- Compact and robust design
- Adaptation according to IEC 534 - 6 or VDI/VDE 3845 for lift and swivel drives or as remote variant on Bürkert process valves

Customer benefits

- Quick and easy commissioning
- Intuitive and simple operation via a graphic display with backlight and touch keypad
- Guaranteed reliability and scheduled maintenance thanks to valve monitoring and diagnostics
- Long service life

DTS 1000112932 EN Version: - Status: RL (released | freigegeben | valide) printed: 06.10.2026

valvesgo.com

Positioner SideCONTROL BASIC Remote	
Positioner Type 8791 ▸ with remote sensor Type 8798 ▸ Actuator size Ø 70/90/130/225 mm	
	The intelligent digital positioner and process controller Type 8791/8798 is designed for mounting on linear and rotary actuators with standardisation in accordance with IEC 534 - 6 or VDI/VDE 3845 for demanding control tasks. The variant with remote position sensor Type 8798 is used for controlling Bürkert process control valves. It is operated via a graphic display with backlight. The positioner and process controller can be initialised automatically using the TUNE functions. **Features** • Simple design • Universal control system for single and double acting actuators • Highly dynamic actuating system without internal pilot air consumption in the balanced state • Adaptation according to IEC 534 - 6 or VDI/VDE 3845 for lift and swivel drives or as remote variant on Bürkert process valves • AS-Interface, IO-Link, Bürkert system bus (büS) (only for positioner Type 8791 BASIC Remote) **Customer benefits** • Simple commissioning • Simple device for simple control tasks • Low energy consumption
Positioner IP20 Type 8791 ▸ with remote sensor Type 8798 ▸ Actuator size Ø 70/90/130/225 mm	

valvesgo.com

DTS 1000112932 EN Version: - Status: RL (released | freigegeben | valide) printed: 06.10.2026

valvesgo.com

9. Networking and combination with other Bürkert products

The **Type 2301 Globe Control Valve** can be combined with our extensive range of positioners and process controllers to form the **Continuous ELEMENT valve system, Type 8802-GD**.

The range of the control unit consists of;

- A digital electropneumatic positioner/process controller **Type 8692/8693** (for valve actuator sizes Ø 70/90/130/225 mm)
- A digital electropneumatic positioner, basic **Type 8694** (for valve actuator size Ø 70/90/130/225 mm)
- A digital electropneumatic positioner, basic **Type 8696** (for valve actuator size Ø 50 mm)
- An electropneumatic positioner, SideCONTROL **Type 8792** or an electropneumatic process controller, **Type 8793** (for valve actuator size Ø 70/90/130/225 mm) and a remote sensor, **Type 8798**
- An electropneumatic positioner, SideCONTROL Basic **Type 8791** (for valve actuator size Ø 70/90/130/225 mm) and a remote sensor, **Type 8798**

Note:

- For the configuration of further valve systems please use the **Product Enquiry Form** (see **"10.3. Bürkert Product Enquiry Form" on page 30**).
- You order two components and receive a completely assembled and tested valve.

Example with threaded connection

Control valve

Type 2301

Digital electropneumatic process controller / positioner for the integrated mounting on process control valves

Type 8693 ▸
Process controller
Actuator Ø 70, 90, 130, 225

Type 8692 ▸
Positioner
Actuator Ø 70, 90, 130, 225

Type 8694 ▸
Positioner
Actuator Ø 70, 90, 130, 225

Type 8696 ▸
Positioner
Actuator Ø 50

ELEMENT Continuous Regelventilsysteme

Type 8802-GD-J ▸
2301 + 8693

Type 8802-GD-I ▸
2301 + 8692

Type 8802-GD-L ▸
2301 + 8694

Type 8802-GD-M ▸
2301 + 8696

DTS 1000112932 EN Version: - Status: RL (released | freigegeben | valide) printed: 06.10.2026

valvesgo.com

Control valve

Type 2301

Digital electropneumatic process controller / positioner SideCONTROL

		oder	
Type 8793 ▸ Process controller + **Type 8798** ▸ Remote sensor Actuator Ø 70, 90, 130, 225	**Type 8792** ▸ Positioner + **Type 8798** ▸ Remote sensor Actuator Ø 70, 90, 130, 225	**Type 8791** ▸ Positioner + **Type 8798** ▸ Remote sensor Actuator Ø 70, 90, 130, 225	**SideCONTROL Basic IP20** Positioner Actuator Ø 50

ELEMENT Continuous control valve system

Type 8802-GD-Q ▸ 2301 + 8793 + 8798	**Type 8802-GD-P** ▸ 2301 + 8792 + 8798	**Type 8802-GD-O** ▸ 2301 + 8791 + 8798

DTS 1000112932 EN Version: - Status: RL (released | freigegeben | valide) printed: 06.10.2026

valvesgo.com

10. Ordering information

10.1. Bürkert eShop

Bürkert eShop – Easy ordering and quick delivery

You want to find your desired Bürkert product or spare part quickly and order directly? Our online shop is available for you 24/7. Sign up and enjoy all the benefits.

Order online now

10.2. Bürkert product filter

Bürkert product filter – Get quickly to the right product

You want to select products comfortably based on your technical requirements?
Use the Bürkert product filter and find suitable articles for your application quickly and easily.

Try out our product filter

10.3. Bürkert Product Enquiry Form

Note:
Please see our Product Enquiry Form for a full explanation of our specification key.

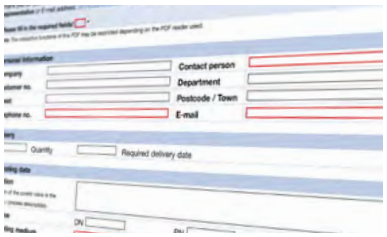

Bürkert Product Enquiry Form – Your enquiry quickly and compactly

Would you like to make a specific product enquiry based on your technical requirements? Use our Product Enquiry Form for this purpose. There you will find all the relevant information for your Bürkert contact. This will enable us to provide you with the best possible advice.

Fill out the form now

DTS 1000112932 EN Version: - Status: RL (released | freigegeben | valide) printed: 06.10.2026

valvesgo.com

10.4. Ordering chart flange connection

Valves with flow direction below seat

Nominal diameter (port connection)		Seat size	Actuator size Ø	K_{VS} value	Article no.	
					Seat seal	
DN	NPS		[mm]	[m³/h]	PTFE	Stainless steel
DIN EN 1092 - 1						
10	⅜	3	70 (M)	0.1	–	o. r.
		3	70 (M)	0.2	–	o. r.
		4	70 (M)	0.5	–	o. r.
		6	70 (M)	1.25	370257	350725
		8	70 (M)	2	213985	215212
		10	70 (M)	2.7	213989	215215
15	½	3	70 (M)	0.1	–	o. r.
		3	70 (M)	0.2	–	o. r.
		4	70 (M)	0.5	–	o. r.
		6	70 (M)	1.25	234255	378904
		8	70 (M)	2.1	213987	215214
		10	70 (M)	3.1	213991	215217
		15	70 (M)	4.3	204932	205010
20	¾	10	70 (M)	3.2	210530	215218
		15	70 (M)	5.2	213993	214030
		20	70 (M)	7.1	204935	205012
25	1	15	70 (M)	5.3	213994	214031
		20	70 (M)	7.2	213995	214032
		25	70 (M)	12	204937	205014
			90 (N)	12	242054	229421
32	1¼	25	90 (N)	8.9	213997	210446
			130 (P)	13	222634	222655
		32	90 (N)	13.4	204939	205016
			130 (P)	17.8	223597	223598
40	1½	32	90 (N)	14.4	213999	214035
			130 (P)	20.2	222636	222657
		40	90 (N)	17.5	204941	205018
			130 (P)	23.8	219791	222659
50	2	40	90 (N)	18	214001	214037
			130 (P)	24.6	222638	222660
		50	90 (N)	28	204942	205019
			130 (P)	37	214003	214039
65	2½	50	130 (P)	45	214005	214040
			225 (L)	39.5	20060552	20060584
		65	130 (P)	65	217772	219618
			225 (L)	62	20060553	20060585
80	3	65	130 (P)	73	239545	239581
			225 (L)	70	20060554	20060587
		80	130 (P)	100	239540	239576
			225 (L)	100	20060555	20060589
100	4	80	130 (P)	110	239561	239597
			225 (L)	115	20060556	20060590
		100	130 (P)	140	239556	331125
			225 (L)	140	20060557	20060591

DTS 1000112932 EN Version: - Status: RL (released | freigegeben | valide) printed: 06.10.2026

valvesgo.com

Nominal diameter (port connection)		Seat size	Actuator size Ø	K_{VS} value	Article no.	
					Seat seal	
DN	NPS		[mm]	[m³/h]	PTFE	Stainless steel
JIS 10K						
15	½	3	70 (M)	0.1	–	o. r.
		3	70 (M)	0.2	–	o. r.
		4	70 (M)	0.5	–	o. r.
		6	70 (M)	1.25	367023	o. r.
		8	70 (M)	2.1	215203	215228
		10	70 (M)	3.1	213913	213911
		15	70 (M)	4.3	204953	205030
20	¾	10	70 (M)	3.2	215204	215229
		15	70 (M)	5.2	213936	213933
		20	70 (M)	7.1	204955	205032
25	1	15	70 (M)	5.3	214020	214059
		20	70 (M)	7.2	213930	213914
		25	70 (M)	12	204957	205034
			90 (N)	12	242165	242199
32	1¼	25	90 (N)	8.9	213939	213937
			130 (P)	13	222643	222665
		32	90 (N)	13.4	213177	213178
			130 (P)	17.8	222645	222667
40	1½	32	90 (N)	14.4	213932	213931
			130 (P)	20.2	222647	222668
		40	90 (N)	17.5	204959	205037
			130 (P)	23.8	222649	222670
50	2	40	90 (N)	18	213941	213940
			130 (P)	24.6	222650	222671
		50	90 (N)	28	204960	205038
			130 (P)	37	214023	214062
65	2½	50	130 (P)	45	214024	214063
			225 (L)	39.5	20060565	20060599
		65	130 (P)	65	219617	219620
			225 (L)	62	20060568	20060600
80	3	65	130 (P)	73	239547	239584
			225 (L)	70	20060569	20060601
		80	130 (P)	100	239542	239578
			225 (L)	100	20060570	20060602
100	4	80	130 (P)	110	239563	239599
			225 (L)	115	20060571	20060604
		100	130 (P)	140	239558	239594
			225 (L)	140	20060572	20060605

o. r. = on request

DTS 1000112932 EN Version: - Status: RL (released | freigegeben | valide) printed: 06.10.2026

valvesgo.com

Nominal diameter (port connection)		Seat size	Actuator size Ø	K_{VS} value	Article no.	
					Seat seal	
DN	NPS		[mm]	[m³/h]	PTFE	Stainless steel
ANSI B 16.5						
15	½	3	70 (M)	0.1	–	o. r.
			70 (M)	0.2	–	o. r.
		4	70 (M)	0.5	–	o. r.
		6	70 (M)	1.25	367211	380948
		8	70 (M)	2.1	215198	215221
		10	70 (M)	3.1	215199	215222
		15	70 (M)	4.3	204944	205021
20	¾	10	70 (M)	3.2	215200	215223
		15	70 (M)	5.2	214009	214046
		20	70 (M)	7.1	204946	205023
25	1	15	70 (M)	5.3	214010	214047
		20	70 (M)	7.2	214011	214048
		25	70 (M)	12	204948	205025
			90 (N)	12	464851	464367
40	1½	32	90 (N)	14.4	215201	215224
			130 (P)	20.2	463905	463913
		40	90 (N)	17.5	204950	205027
			130 (P)	23.8	463907	463915
50	2	40	90 (N)	18	214013	214050
			130 (P)	24.6	463908	463916
		50	90 (N)	28	204951	205028
			130 (P)	37	214015	214052
65	2½	50	130 (P)	45	239537	239573
			225 (L)	39.5	20060558	20060592
		65	130 (P)	65	239535	239572
			225 (L)	62	20060559	20060594
80	3	65	130 (P)	73	239546	239582
			225 (L)	70	20060560	20060595
		80	130 (P)	100	239541	239577
			225 (L)	100	20060562	20060596
100	4	80	130 (P)	110	239562	239598
			225 (L)	115	20060563	20060597
		100	130 (P)	140	239557	239593
			225 (L)	140	20060564	20060598

o. r. = on request

Further variants on request

Approval
FDA, ATEX, (EC Gas Appliance Directive 2009/142/EC)

Control function/Circuit function
B (normally open: NO)

Process connection
Further valve body connections

DTS 1000112932 EN Version: - Status: RL (released | freigegeben | valide) printed: 06.10.2026

valvesgo.com

10.5. Ordering chart threaded connection

Valves with flow direction below seat

Nominal diameter (port connection)		Seat size	Actuator size Ø	K_{VS} value	Article no.	
					Seat seal	
DN	NPS		[mm]	[m³/h]	PTFE	Stainless steel
DIN EN ISO 228 - 1						
10	⅜	3	70 (M)	0.1	–	o. r.
		3	70 (M)	0.2	–	o. r.
		4	70 (M)	0.5	–	o. r.
		6	70 (M)	1.25	322059	350407
		8	70 (M)	2	215233	215242
		10	70 (M)	2.7	215235	215245
15	½	3	70 (M)	0.1	–	o. r.
		3	70 (M)	0.2	–	o. r.
		4	70 (M)	0.5	–	o. r.
		6	70 (M)	1.25	236138	354643
		8	70 (M)	2.1	212964	215243
		10	70 (M)	3.1	215236	215246
		15	70 (M)	4.3	206432	213955
20	¾	10	70 (M)	3.2	215237	215247
		15	70 (M)	5.2	214067	215248
		20	70 (M)	7.1	206584	211239
25	1	15	70 (M)	5.3	206588	210460
		20	70 (M)	7.2	206586	210721
		25	70 (M)	12	189145	210485
			90 (N)	12	242203	242207
32	1¼	25	90 (N)	8.9	214070	210407
			130 (P)	13	222677	222687
		32	90 (N)	13.4	210097	210458
			130 (P)	17.8	223599	223600
40	1½	32	90 (N)	14.4	214072	214084
			130 (P)	20.2	222679	222689
		40	90 (N)	17.5	210098	207800
			130 (P)	23.8	222681	222691
50	2	40	90 (N)	18	214074	214086
			130 (P)	24.6	222682	222692
		50	90 (N)	28	210099	203693
			130 (P)	37	214076	214088
65	2½	50	130 (P)	45	214077	214089
		65	130 (P)	65	219621	219622

DTS 1000112932 EN Version: - Status: RL (released | freigegeben | valide) printed: 06.10.2026

valvesgo.com

Nominal diameter (port connection)		Seat size	Actuator size Ø	K_{VS} value	Article no.	
					Seat seal	
DN	NPS		[mm]	[m³/h]	PTFE	Stainless steel
ISO 7-1 / DIN EN 10226-2						
10	⅜	3	70 (M)	0.1	–	o. r.
		3	70 (M)	0.2	–	o. r.
		4	70 (M)	0.5	–	o. r.
		6	70 (M)	1.25	o. r.	o. r.
		8	70 (M)	2	220418	220453
		10	70 (M)	2.7	220421	220457
15	½	3	70 (M)	0.1	–	o. r.
		3	70 (M)	0.2	–	o. r.
		4	70 (M)	0.5	–	o. r.
		6	70 (M)	1.25	o. r.	o. r.
		8	70 (M)	2.1	220881	220455
		10	70 (M)	3.1	220423	220459
		15	70 (M)	4.3	220882	220886
20	¾	10	70 (M)	3.2	220425	220461
		15	70 (M)	5.2	220427	220463
		20	70 (M)	7.1	220430	220466
25	1	15	70 (M)	5.3	220428	220464
		20	70 (M)	7.2	220431	220467
		25	70 (M)	12	220434	220470
			90 (N)	12	464864	464867
32	1¼	25	90 (N)	8.9	220435	220471
			130 (P)	13	463921	463931
		32	90 (N)	13.4	220437	220473
			130 (P)	17.8	463956	463957
40	1½	32	90 (N)	14.4	220438	463803
			130 (P)	20.2	463923	463933
		40	90 (N)	17.5	220440	220476
			130 (P)	23.8	463925	463935
50	2	40	90 (N)	18	220441	220477
			130 (P)	24.6	463926	463936
		50	90 (N)	28	220443	220479
			130 (P)	37	220444	220480
65	2½	50	130 (P)	45	239536	239620
		65	130 (P)	65	239534	239571

o. r. = on request

DTS 1000112932 EN Version: - Status: RL (released | freigegeben | valide) printed: 06.10.2026

valvesgo.com

Nominal diameter (port connection)		Seat size	Actuator size Ø	K_{VS} value	Article no. RC (ASME B 1.20.1)	
					Seat seal	
DN	NPS		[mm]	[m³/h]	PTFE	Stainless steel
ASME B 1.20.1						
10	⅜	3	70 (M)	0.1	–	o. r.
		3	70 (M)	0.2	–	o. r.
		4	70 (M)	0.5	–	o. r.
		6	70 (M)	1.25	o. r.	o. r.
		8	70 (M)	2	220484	220519
		10	70 (M)	2.7	220487	220523
15	½	3	70 (M)	0.1	–	o. r.
		3	70 (M)	0.2	–	o. r.
		4	70 (M)	0.5	–	o. r.
		6	70 (M)	1.25	359073	388407
		8	70 (M)	2.1	220888	220521
		10	70 (M)	3.1	220489	220525
		15	70 (M)	4.3	220889	220894
20	¾	10	70 (M)	3.2	220491	220527
		15	70 (M)	5.2	220493	220529
		20	70 (M)	7.1	220496	220532
25	1	15	70 (M)	5.3	220494	220530
		20	70 (M)	7.2	220497	220533
		25	70 (M)	12	220500	220536
			90 (N)	12	242377	242380
32	1¼	25	90 (N)	8.9	220501	220537
			130 (P)	13	222740	222777
		32	90 (N)	13.4	220503	220539
			130 (P)	17.8	223605	223606
40	1½	32	90 (N)	14.4	220504	220540
			130 (P)	20.2	222742	222763
		40	90 (N)	17.5	220506	220542
			130 (P)	23.8	222765	222767
50	2	40	90 (N)	18	220507	220543
			130 (P)	24.6	222768	222766
		50	90 (N)	28	220509	220545
			130 (P)	37	220510	220546
65	2½	50	130 (P)	45	220511	220547
		65	130 (P)	65	220512	220548

o. r. = on request

Further variants on request

Approval
FDA, ATEX, (EC Gas Appliance Directive 2009/142/EC)

Control function/Circuit function
B (normally open: NO)

Process connection
Further valve body connections

DTS 1000112932 EN Version: - Status: RL (released | freigegeben | valide) printed: 06.10.2026

valvesgo.com

10.6. Ordering chart welded connection

Valves with flow direction below seat

Nominal diameter (port connection)		Seat size	Actuator size Ø	K_{VS} value	Connection MW x TW	Article no. Seat seal	
DN	NPS		[mm]	[m³/h]		PTFE	Stainless steel
DIN EN ISO 1127 - 1 / ISO 4200 / DIN 11866 series B							
10	⅜	3	70 (M)	0.1	17.2 × 1.6	–	o. r.
		3	70 (M)	0.2	17.2 × 1.6	–	o. r.
		4	70 (M)	0.5	17.2 × 1.6	–	o. r.
		6	70 (M)	1.25	17.2 × 1.6	232888	378908
		8	70 (M)	2	17.2 × 1.6	232891	315915
		10	70 (M)	2.7	17.2 × 1.6	o. r.	337061
15	½	3	70 (M)	0.1	21.3 × 1.6	–	o. r.
		3	70 (M)	0.2	21.3 × 1.6	–	o. r.
		4	70 (M)	0.5	21.3 × 1.6	–	o. r.
		6	70 (M)	1.25	21.3 × 1.6	288140	360750
		8	70 (M)	2.1	21.3 × 1.6	212392	216407
		10	70 (M)	3.1	21.3 × 1.6	212393	215873
		15	70 (M)	4.3	21.3 × 1.6	209571	216409
20	¾	15	70 (M)	5.2	26.9 × 1.6	214094	214132
		20	70 (M)	7.1	26.9 × 1.6	214096	210696
25	1	20	70 (M)	7.2	33.7 × 2.0	214097	214135
		25	70 (M)	12	33.7 × 2.0	209572	214138
32	1¼	25	90 (N)	8.9	42.4 × 2.0	214101	214139
		32	90 (N)	13.4	42.4 × 2.0	214103	214141
40	1½	32	90 (N)	14.4	48.3 × 2.0	214104	214142
			130 (P)	20.2	48.3 × 2.0	222700	222721
		40	90 (N)	17.5	48.3 × 2.0	209440	214144
			130 (P)	23.8	48.3 × 2.0	222702	222723
50	2	40	90 (N)	18	60.3 × 2.0	210756	213561
			130 (P)	24.6	60.3 × 2.0	222703	222724
		50	90 (N)	28	60.3 × 2.0	214107	214146
			130 (P)	37	60.3 × 2.0	214108	214147
65	2½	65	130 (P)	65	76.1 × 2.3	219623	219626
			225 (L)	62	76.1 × 2.3	20060573	20060607
80	3	80	130 (P)	100	88.9 × 2.3	239543	239579
			225 (L)	100	88.9 × 2.3	20060574	20060608
100	4	100	130 (P)	140	114.3 × 2.6	239559	239595
			225 (L)	140	114.3 × 2.6	20060575	20060609

DTS 1000112932 EN Version: - Status: RL (released | freigegeben | valide) printed: 06.10.2026

valvesgo.com

Nominal diameter (port connection)		Seat size	Actuator size Ø	K_{VS} value	Connection MW x TW	Article no. Seat seal	
DN	NPS		[mm]	[m³/h]		PTFE	Stainless steel
DIN 11850 - 2 / DIN 11866 series A / DIN EN 10357 series A							
10	⅜	3	70 (M)	0.1	13.0 × 1.5	–	o. r.
		3	70 (M)	0.2	13.0 × 1.5	–	o. r.
		4	70 (M)	0.5	13.0 × 1.5	–	o. r.
		6	70 (M)	1.25	13.0 × 1.5	260632	357231
		8	70 (M)	2	13.0 × 1.5	300236	284179
		10	70 (M)	2.7	13.0 × 1.5	257412	208553
15	½	3	70 (M)	0.1	19.0 × 1.5	–	o. r.
		3	70 (M)	0.2	19.0 × 1.5	–	o. r.
		4	70 (M)	0.5	19.0 × 1.5	–	o. r.
		6	70 (M)	1.25	19.0 × 1.5	248881	367704
		8	70 (M)	2.1	19.0 × 1.5	215250	215911
		10	70 (M)	3.1	19.0 × 1.5	215251	215913
		15	70 (M)	4.3	19.0 × 1.5	215253	209173
20	¾	15	70 (M)	5.2	23.0 × 1.5	214113	208555
		20	70 (M)	7.1	23.0 × 1.5	211937	211953
25	1	20	70 (M)	7.2	29.0 × 1.5	214116	214154
		25	70 (M)	12	29.0 × 1.5	209384	209089
32	1¼	25	90 (N)	8.9	35.0 × 1.5	214119	214156
		32	90 (N)	13.4	35.0 × 1.5	211965	209181
40	1½	32	90 (N)	14.4	41.0 × 1.5	214121	213487
			130 (P)	20.2	41.0 × 1.5	222711	222732
		40	90 (N)	17.5	41.0 × 1.5	211967	209110
			130 (P)	23.8	41.0 × 1.5	222713	222734
50	2	40	90 (N)	18	53.0 × 1.5	214123	213411
			130 (P)	24.6	53.0 × 1.5	222714	222735
		50	90 (N)	28	53.0 × 1.5	211968	209185
			130 (P)	37	53.0 × 1.5	214125	214159
65	2½	65	130 (P)	65	70.0 × 2.0	219625	219628
			225 (L)	62	70.0 × 2.0	20060577	20060610
80	3	80	130 (P)	100	85.0 × 2.0	239544	239580
			225 (L)	100	85.0 × 2.0	20060578	20060612
100	4	100	130 (P)	140	104.0 × 2.0	239560	239596
			225 (L)	140	104.0 × 2.0	20060580	20060613

o. r. = on request

DTS 1000112932 EN Version: - Status: RL (released | freigegeben | valide) printed: 06.10.2026

valvesgo.com

Nominal diameter (port connection)	Seat size	Actuator size Ø	K_{VS} value	Connection Ø DS x WS	Operating pressure	Article no.	
						Seat seal	
NPS		[mm]	[m³/h]			PTFE (VI)	Stainless steel (IV)
ASME BPE / DIN 11866 series C							
½	3	70 (M)	0.1	12.7 × 1.65	25 (IV)	–	o. r.
	3	70 (M)	0.2	12.7 × 1.65	–	–	o. r.
	4	70 (M)	0.5	12.7 × 1.65	25 (IV)	–	o. r.
	6	70 (M)	1.25	12.7 × 1.65	25 (IV)	226651	20001538
	8	70 (M)	2	12.7 × 1.65	25 (IV)	379940	216879
	10	70 (M)	2.7	12.7 × 1.65	25 (IV)	225463	313806
¾	10	70 (M)	3.1	19.05 × 1.65	25 (IV)	241143	o. r.
	15	70 (M)	4.3	19.05 × 1.65	25 (IV)	335739	335741
1	10	70 (M)	3.2	25.4 × 1.65	25 (IV)	241633	242576
	15	70 (M)	5.2	25.4 × 1.65	25 (IV)	226329	242579
	20	70 (M)	7.1	25.4 × 1.65	16 (IV)	230405	216902
1½	32	90 (N)	13.4	38.1 × 1.65	16 (IV)	230409	242587
		130 (P)	17.8	38.1 × 1.65	25 (IV)	242557	242589
2	40	90 (N)	17.5	50.8 × 1.65	12 (IV)	211655	242592
		130 (P)	23.8	50.8 × 1.65	25 (IV)	242561	242593
2½	50	130 (P)	37	63.5 × 1.65	25 (20 [1.)]) (IV)	335735	335737
3	65	130 (P)	65	76.2 × 1.65	16 (15 [1.)]) (IV)	268682	350667
		225 (L)	62	76.2 × 1.65	–	20060581	20060615
4	80	130 (P)	110	101.6 × 2.11	10 (IV)	298386	o. r.
		225 (L)	115	101.6 × 2.11	–	20060582	20060616
	100	130 (P)	140	101.6 × 2.11	6 (IV)	275103	289251
		225 (L)	140	101.6 × 2.11	–	20060583	20060617

o. r. = on request

1.) According to the Pressure Equipment Directive 97/23/EC for compressible fluids of Group 1 (hazardous gases and vapours according to Article 3 No. 1.3 letter a first dash)

Further variants on request

Approval
FDA, ATEX, (EC Gas Appliance Directive 2009/142/EC)

Control function/Circuit function
B (normally open: NO)

Process connection
Further valve body connections

DTS 1000112932 EN Version: - Status: RL (released | freigegeben | valide) printed: 06.10.2026

valvesgo.com

10.7. Ordering chart clamp connection

Valves with flow direction below seat

Nominal diameter (port connection)		Seat size	Actuator size Ø	K_{VS} value	Connection MC x TC, CC	Article no. Seat seal	
DN	NPS		[mm]	[m³/h]		PTFE	Stainless steel
DIN 32676 series A							
15	½	15	70 (M)	4.3	19 × 1.5. 34	222593	282208
20	¾	20	70 (M)	7.1	23 × 1.5. 34	225647	282209
25	1	25	90 (N)	12.0	29 × 1.5. 50.5	222594	282210
32	1¼	32	90 (N)	13.4	35 × 1.5. 50.5	240415	282211
40	1½	40	130 (P)	23.8	41 × 1.5. 50.5	240351	282212
50	2	50	130 (P)	37.0	53 × 1.5. 64	282258	282259
DIN 32676 series B							
15	½	15	70 (M)	4.3	21.3 × 1.6. 50.5	273974	282213
20	¾	20	70 (M)	7.1	26.9 × 1.6. 50.5	209438	282214
25	1	25	90 (N)	12.0	33.7 × 2.0. 50.5	241115	282215
40	1½	40	130 (P)	23.8	48.3 × 2.0. 64.0	209880	284181
50	2	50	130 (P)	37.0	60.3 × 2.0. 77.5	282261	282263

Further variants on request

Approval FDA, ATEX, (EC Gas Appliance Directive 2009/142/EC)	**Control function/Circuit function** B (normally open: NO)
Process connection Further valve body connections	

DTS 1000112932 EN Version: - Status: RL (released | freigegeben | valide) printed: 06.10.2026

valvesgo.com

valvesgo.com