bürkert
FLUID CONTROL SYSTEMS

Type 3320, 3321

Electromotive 2/2-way valve
Elektromotorisches 2/2-Wege-Ventil
Vanne électromotorisée à 2/2 voies

valvesgo.com

MAN 1000312305 EN Version: B Status: RL (released | freigegeben) printed: 22.09.2026

Service Manual
Serviceanleitung
Service Manuel

valvesgo.com

MAN 1000312305 EN Version: B Status: RL (released | freigegeben) printed: 22.09.2026

We reserve the right to make technical changes without notice.
Technische Änderungen vorbehalten.
Sous réserve de modifications techniques.

É B¿rkert Werke GmbH & Co. KG, 2016 - 2017

Operating Instructions 1705/01_EU-EN_00810526/ Original DE

valvesgo.com

Inhalt

1 THE SERVICE INSTRUCTIONS 5

1.1 Symbols 5

1.2 Definition of the term “device” 5

2 BASIC SAFETY INSTRUCTIONS 6

3 GENERAL INFORMATION 8

3.1 Contact addresses 8

3.2 Warranty 8

3.3 Information on the Internet 8

3.4 Auxiliary materials 8

4 OVERVIEW OF SPARE PARTS 9

4.1 Replacement part sets for Type 3320 9

4.2 Replacement part sets for Type 3321 9

4.3 Spare parts for Types 3320 and 3321 10

5 CHANGING THE SWIVEL PLATE SET 11

5.1 Removing the actuator 11

5.2 Change swivel plate set 15

5.3 Installing the actuator 16

5.4 Running X.TUNE 17

6 CHANGING THE SEAL SET 18

6.1 Remove swivel plate 18

6.2 Changing the packing gland 19

6.3 Install swivel plate 22

7 CHANGING THE VALVE SET 23

7.1 Changing the valve set 23

8 CHANGING THE ENERGY PACK 25

8.1 Removing the dummy cover 25

MAN 1000312305 EN Version: B Status: RL (released | freigegeben) printed: 22.09.2026

valvesgo.com

valvesgo.com

8.2 Removing LED and storage module 26
8.3 Removing actuator cover 26
8.4 Replacing the SAFEPOS energy-pack 26

9 ACCESSORIES, SPARE PARTS 28

10 PACKAGING, TRANSPORT 28

11 STORAGE 28

12 DISPOSAL 28

MAN 1000312305 EN Version: B Status: RL (released | freigegeben) printed: 22.09.2026

valvesgo.com

1 THE SERVICE INSTRUCTIONS

The service instructions describe the procedure for changing spare parts of the process valves of Types 3320 and 3321.

Keep these instructions in a location which is easily accessible to every user and make these instructions available to every new owner of the device.

The service instructions contain important safety information.

Failure to observe these instructions may result in hazardous situations.

▸ The service instructions must be read and understood.

1.1 Symbols

DANGER!

Warns of an immediate danger.

▸ Failure to observe the warning will result in fatal or serious injuries.

WARNING!

Warns of a potentially dangerous situation.

▸ Failure to observe the warning may result in serious injuries or death.

CAUTION!

Warns of a possible danger.

▸ Failure to observe this warning may result in a moderate or minor injury.

NOTE!

Warns of damage to property!

• Failure to observe the warning may result in damage to the device or the equipment.

indicates important additional information, tips and recommendations.

refers to information in these operating instructions or in other documentation.

▸ designates instructions for risk prevention.

→ designates a procedure which you must carry out.

✔ indicates a result.

1.2 Definition of the term “device”

In these instructions, the term “device” always refers to the Types 3320 and 3321.

MAN 1000312305 EN Version: B Status: RL (released | freigegeben) printed: 22.09.2026

valvesgo.com

2 BASIC SAFETY INSTRUCTIONS

These safety instructions do not make allowance for any

- contingencies and events which may arise during the assembly, operation, and maintenance.
- local safety regulations – the operator is responsible for observing these regulations, also in relation to the installation personnel.

Risk of injury from high pressure.

▸ Before working on the system or device, switch off the pressure and vent or drain lines.

If switched on for a prolonged time, risk of burns or fire due to hot device surface.

▸ Keep the device away from highly flammable substances and media and do not touch with bare hands.

Risk of crushing due to mechanically moving parts.

▸ Perform installation and maintenance work only in the isolated state. Devices with SAFEPOS energy-pack: Completely drain SAFEPOS energy-pack. Wait until LED illuminated ring goes out; the LED status must not be in LED off mode.

▸ Keep clear of the openings in the valve body.

Danger due to an uncontrolled process in the event of a power failure.

If devices do not have the optional SAFEPOS energy-pack, the valve remains in an undefined position in the event of a power failure.

▸ If the valve position is relevant as regards safety in the event of a power failure: Use only those devices which have the SAFEPOS energy-pack (optional energy pack).

▸ In the SAFEPOS select a valve position which is safe for the process.

General hazardous situations.

To prevent injuries:

▸ Do not make any internal or external changes on the device and do not subject it to mechanical stress.

▸ Only feed media specified in the data sheet into the media connections.

▸ Secure to prevent unintentional actuation.

▸ Only trained technicians may perform installation and maintenance work.

▸ The valves must be installed in accordance with the regulations applicable in the country.

▸ After an interruption in the power supply, ensure that the process is restarted in a controlled manner. Observe sequence!
1. Apply supply voltage.
2. Charge the device with medium.

▸ Observe the general rules of technology.

▸ Install the valves must in accordance with the regulations applicable in the country.

MAN 1000312305 EN Version: B Status: RL (released | freigegeben) printed: 22.09.2026

valvesgo.com

NOTE!

Electrostatically sensitive components and modules.

The device contains electronic components which react sensitively to electrostatic discharge (ESD). Contact with electrostatically charged persons or objects are hazardous to these components. In the worst case scenario, they will be destroyed immediately or will fail after start-up.

- Observe the requirements in accordance with EN 61340-5-1 to minimize or avoid the possibility of damage caused by a sudden electrostatic discharge.
- Do not touch electronic components while the supply voltage is switched on.

MAN 1000312305 EN Version: B Status: RL (released | freigegeben) printed: 22.09.2026

valvesgo.com

3 GENERAL INFORMATION

3.1 Contact addresses

Germany

Bürkert Fluid Control Systems
Sales Center
Christian-Bürkert-Str. 13-17
D-74653 Ingelfingen
Tel. + 49 (0) 7940 - 10 91 111
Fax + 49 (0) 7940 - 10 91 448
Email: info@buerkert.com

International

Contact addresses can be found on the final pages of the printed operating instructions.

And also on the Internet at:

www.burkert.com

3.2 Warranty

The warranty is only valid if the device is used as intended in accordance with the specified application conditions.

3.3 Information on the Internet

Operating instructions and data sheets for Types 3320 and 3321 can be found on the Internet at:

www.burkert.com

3.4 Auxiliary materials

The following auxiliary materials are recommended in these instructions for carrying out repairs:

Type of auxiliary material	Auxiliary material	Manufacturer's specifications
Sealer and anti-seize agents	Silicone grease OKS 1110-3	OKS Schmierstoffe GmbH www.oks-germany.com
Lubrication paste	Klüber paste UH1 96-402	Klüber Lubrication München www.klueber.de

MAN 1000312305 EN Version: B Status: RL (released | freigegeben) printed: 22.09.2026

valvesgo.com

4 OVERVIEW OF SPARE PARTS

4.1 Replacement part sets for Type 3320

The following replacement part sets are available for Type 3320:

- **Swivel plate set**
  consisting of: graphite seal, swivel plate and dowel pin
- **Seal set for the packing gland**
  consisting of: individual parts of the packing gland, graphite seal and lubricant
- **Spindle guide for the packing gland**
  consisting of: spindle guide, graphite seal and lubricant

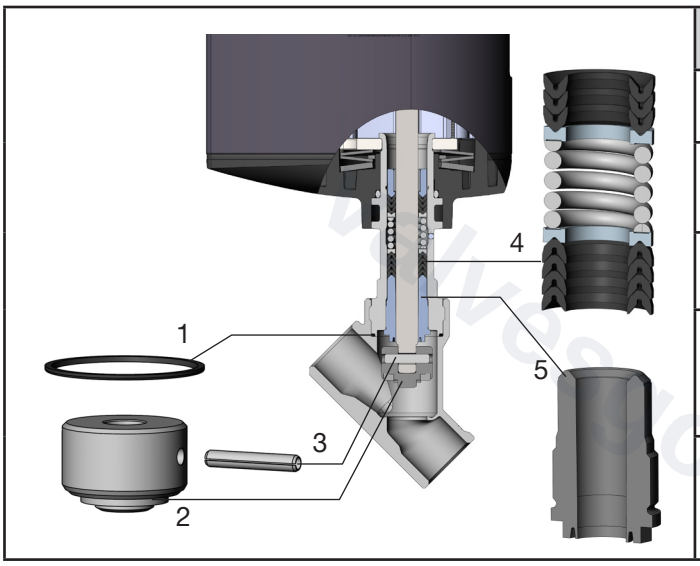

Item.	Description		
1	Graphite seal	Swivel plate set	Valve set
2	Swivel plate		
3	Dowel pin		
4	Seal set for packing gland		
5	Spindle guide for packing gland		

Fig. 1: Replacement part sets for type 3320

4.2 Replacement part sets for Type 3321

The following replacement part sets are available for Type 3321:

- **Swivel plate set**
  consisting of: graphite seal, swivel plate and dowel pin
- **Valve set**
  consisting of: graphite seal, swivel plate, dowel pin and valve seat
- **Seal set for the packing gland**
  consisting of: individual parts of the packing gland, graphite seal and lubricant
- **Spindle guide for the packing gland**
  consisting of: spindle guide, graphite seal and lubricant

MAN 1000312305 EN Version: B Status: RL (released | freigegeben) printed: 22.09.2026

valvesgo.com

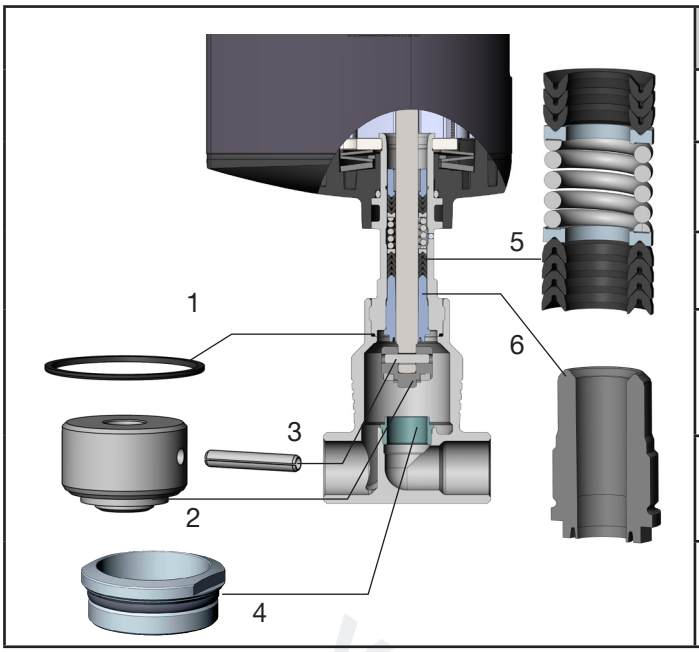

Item.	Description		
1	Graphite seal	Swivel plate set	Valve set
2	Swivel plate		
3	Dowel pin		
4	Valve seat		
5	Seal set for packing gland		
6	Spindle guide for packing gland		

Fig. 2: Replacement part sets for type 3321

4.3 Spare parts for Types 3320 and 3321

- SAFEPOS energy-pack. Optionally there is an energy pack for the device. If the supply voltage fails, the energy pack supplies the actuator with the required energy to move the valve into the required position which can be adjusted via the menu.

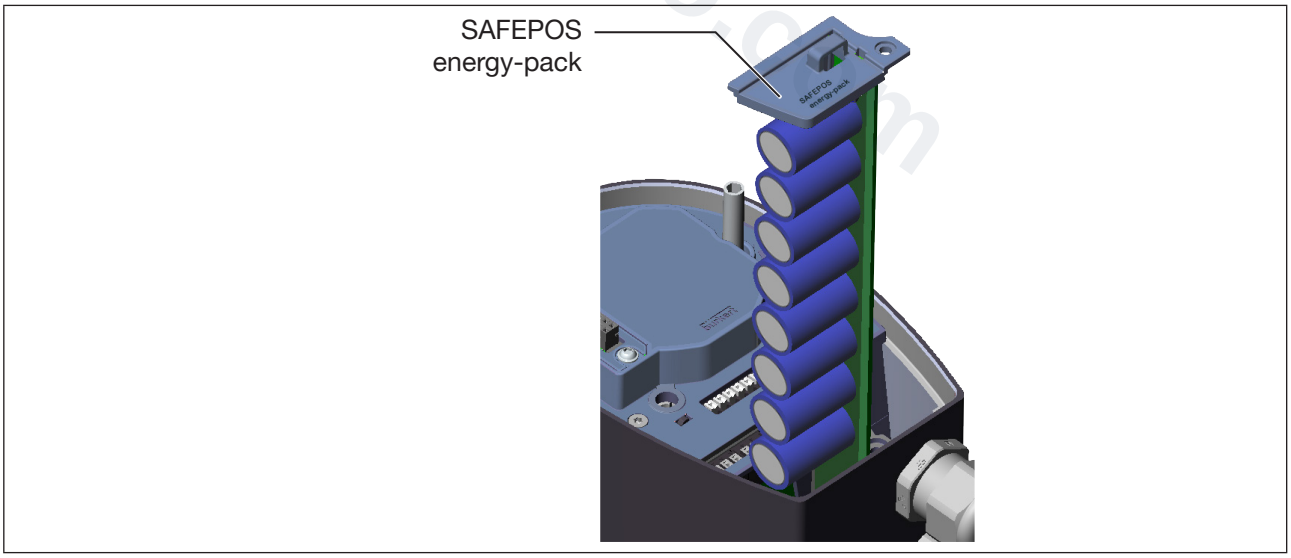

Fig. 3: SAFEPOS energy-pack

MAN 1000312305 EN Version: B Status: RL (released | freigegeben) printed: 22.09.2026

valvesgo.com

5 CHANGING THE SWIVEL PLATE SET

Before the swivel plate set can be changed, the actuator must be removed from the valve body.

5.1 Removing the actuator

DANGER!

Risk of injury from high pressure.

▸ Before working on the system or device, switch off the pressure and vent or drain lines.

WARNING!

Risk of injury if the wrong tools are used.

It is dangerous to use unsuitable tools for installation work as the device may be damaged.

▸ To remove the actuator from the valve body, use an open-end wrench, never a pipe wrench.

When removing the actuator from the valve body, ensure that the valve is in the open position. The valve position must be detected on the mechanical position indicator (as illustrated in „Fig. 1“).
The control valve can be manually opened in 2 ways: electrically or mechanically.

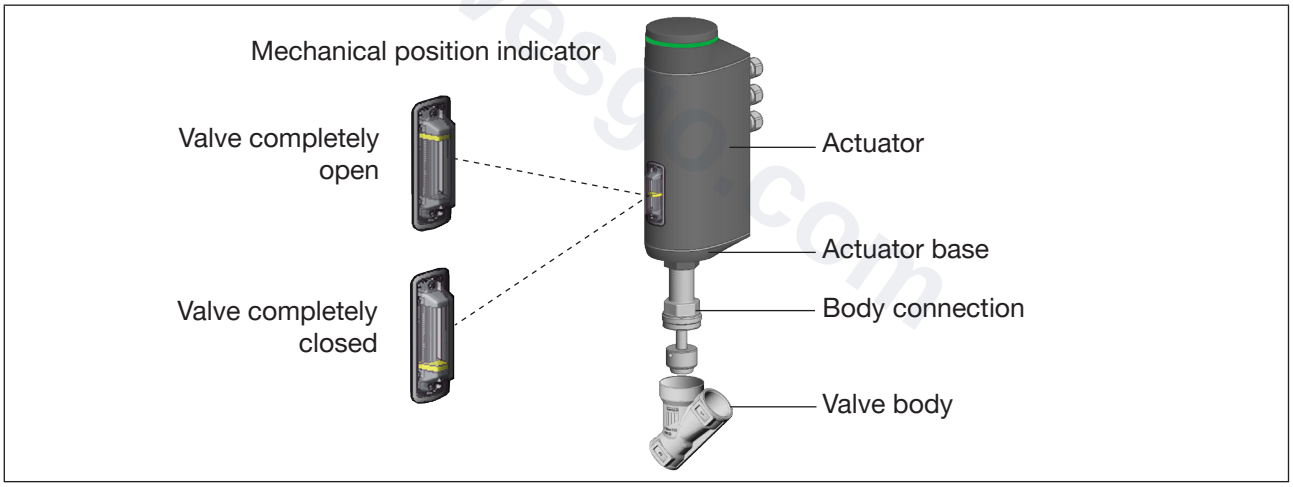

Fig. 4: Mechanical position indicator

5.1.1 Opening valve electrically

Depending on the device version, the valve is manually and electrically opened on the display or by pressing 2 buttons which are located on the LED and storage module under the dummy cover.

To actuate the valve, the device must be in MANUAL operating state. The 2 buttons for opening and closing the valve are located under the dummy cover.

MAN 1000312305 EN Version: B Status: RL (released | freigegeben) printed: 22.09.2026

english
valvesgo.com

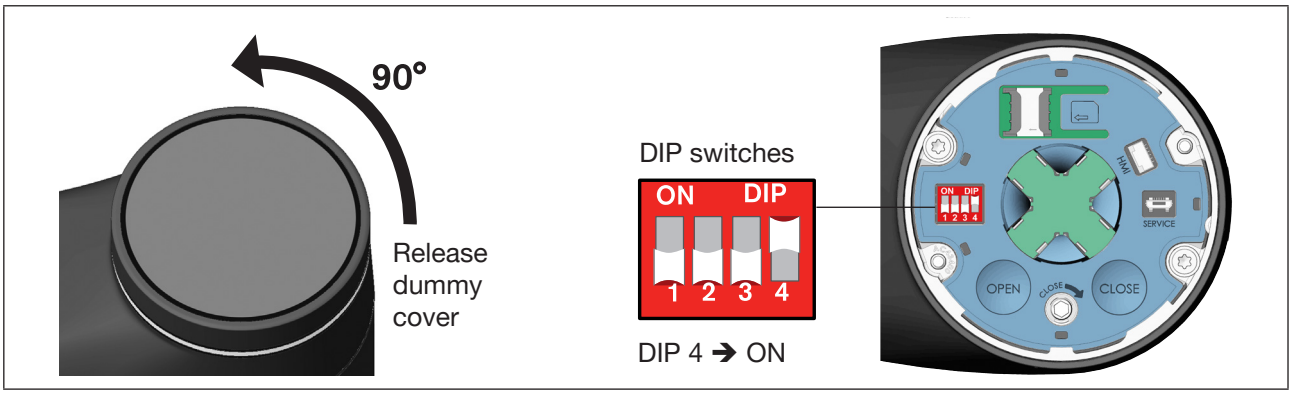

Fig. 5: Setting MANUAL operating state

→ Rotate the dummy cover counter-clockwise by 90° and remove from the actuator housing.

→ Set DIP switch 4 to ON.
The device is the MANUAL operating state.

→ Press OPEN button until the valve is completely open.
The valve position must be detected on the mechanical position indicator (see „Fig. 4“).

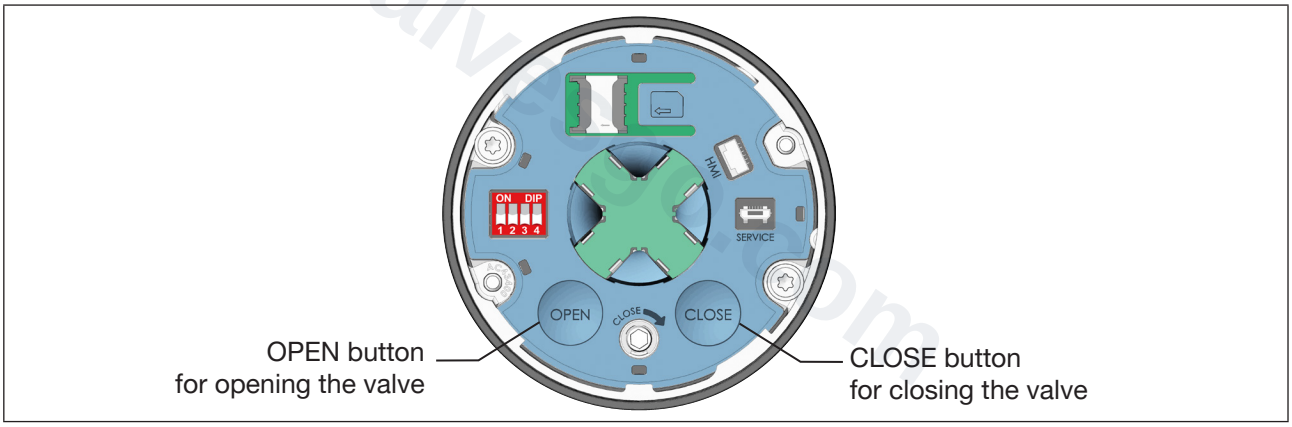

Fig. 6: Electrical manual control for devices without display module

→ Clamp the valve body into a holding fixture.

→ Place a suitable open-end wrench on the body connection.
⚠ Do not unscrew the body connection with a tool which may damage the body connection.

→ Unscrew the actuator off the valve body.

MAN 1000312305 EN Version: B Status: RL (released | freigegeben) printed: 22.09.2026

valvesgo.com

5.1.2 Opening valve mechanically

When the supply voltage is not applied, e.g. during installation or in the event of a power failure, the valve can be opened with the mechanical manual control.

NOTE!

The mechanical manual control may be used in a de-energized state only, otherwise the device may be damaged.

→ Rotate dummy cover counter-clockwise by 90° and remove from the actuator housing.

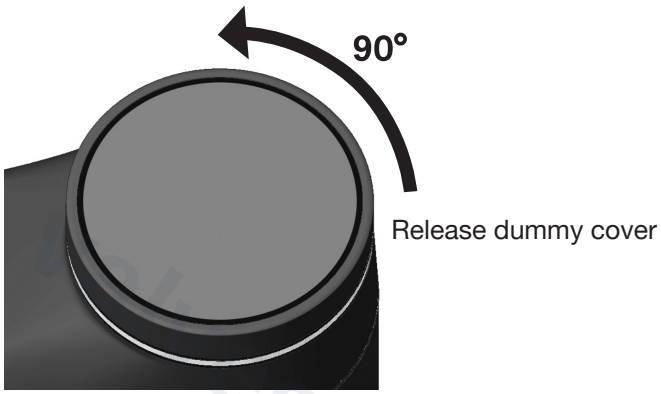

Fig. 7: Removing dummy cover from the actuator housing

NOTE!

Damage to the manual control by exceeding the tightening torque.

If the tightening torque is exceeded on reaching the valve end position, the mechanical manual control will be damaged.

▸ Do not exceed the maximum tightening torque of 2 Nm.

To adjust the valve, use an Allen key with 4 mm width across flats. The mechanical position indicator must detect when the valve reaches the end positions (see „Fig. 4“).

→ Applying a gentle pressure, couple the mechanical manual control and simultaneously turn the Allen key counter-clockwise (see„Fig. 8“).

⚠ Maximum tightening torque 2 Nm!

MAN 1000312305 EN Version: B Status: RL (released | freigegeben) printed: 22.09.2026

valvesgo.com

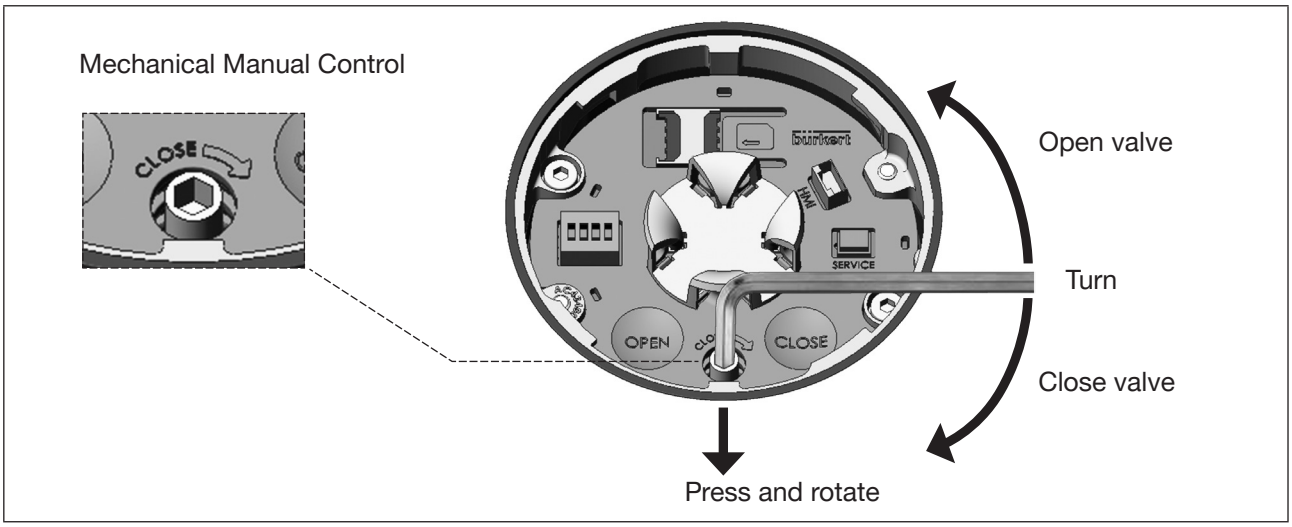

Fig. 8: Mechanical manual control

→ After reaching the required valve position, remove the Allen key.
The valve position must be detected on the mechanical position indicator (see „Fig. 4“).

→ Clamp the valve body into a holding fixture.

→ Place a suitable open-end wrench on the body connection.
⚠ Do not unscrew the body connection with a tool which may damage the body connection.

→ Unscrew the actuator off the valve body.

MAN 1000312305 EN Version: B Status: RL (released | freigegeben) printed: 22.09.2026

5.2 Change swivel plate set

→ Support swivel plate on the cylindrical part using a prism.

→ Knock out dowel pin using a suitable pin punch (see „Tab. 1“).

Spindle diameter [mm]	Pin punch	Connection size Valve body DN [[mm]
10	3	10,15, 20, 25, 32 and 40
14	5	50

Tab. 1: Spindle diameter with reference to DN

→ Remove swivel plate.

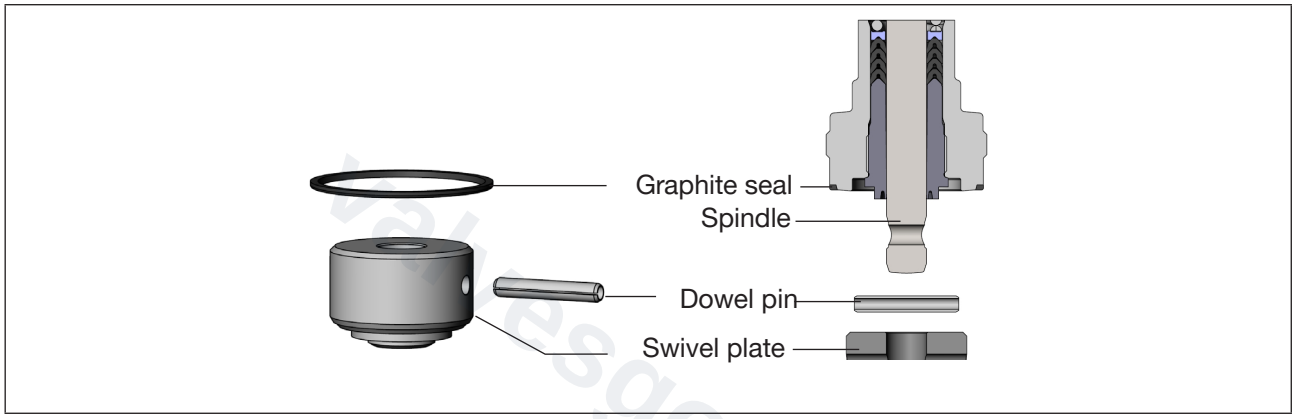

Fig. 9: Changing the swivel plate set

NOTE!

Important information for the problem-free and safe functioning of the device: The sealing surface and control contour of the swivel plate cannot be damaged.

→ Place new swivel plate on the spindle.

→ Align holes in the swivel plate with holes in the spindle.

→ Support swivel plate on the cylindrical part using a prism.

→ Position dowel pin and carefully knock in using a hammer.

→ Center the dowel pin relative to the spindle axis.

MAN 1000312305 EN Version: B Status: RL (released | freigegeben) printed: 22.09.2026

valvesgo.com

5.3 Installing the actuator

When installing the actuator, ensure that the valve is in the open position.

→ Replace graphite seal.

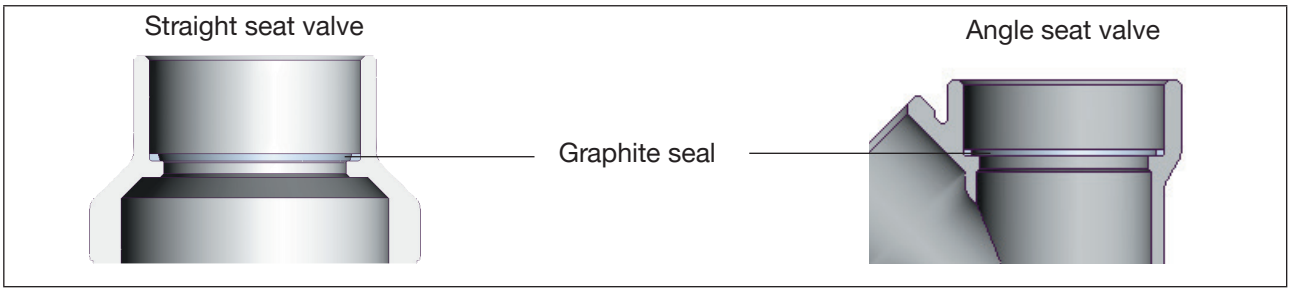

Fig. 10: Graphite seal

WARNING!

Danger if unsuitable lubricants are used.

Unsuitable lubricant may contaminate the medium. In oxygen applications there is a risk of an explosion.

- Only use approved lubricants for specific applications, such as oxygen applications or analytical applications.

→ Grease the external thread of the body connection (e.g. with Klüber paste UH1 96-402 from Klüber).

→ Place a suitable open-end wrench on the body connection.
⚠ Do not screw on the body connection with a tool which may damage the body connection.

→ Screw actuator onto the valve body.
⚠ Observe tightening torque (see „Tab. 2“).

Connection size valve body DN [mm]	Tightening torques Nm]
13, 15	45 ±3
20	50 ±3
25	60 ±3
32	65 ±3
40	
50	70 ±3
65	100 ±3

Tab. 2: Tightening torques for valve body / body connection

MAN 1000312305 EN Version: B Status: RL (released | freigegeben) printed: 22.09.2026

valvesgo.com

5.4 Running X.TUNE

After installing the actuator, run the X.TUNE function.

When the X.TUNE function is run, the position controller is adjusted to the physical stroke of the actuating element used.

NOTE!

Do not run X.TUNE without a mandatory requirement.

It is not necessary to rerun the X.TUNE function already run at the factory unless the valve body has been changed. In this case the position controller must be readjusted to the actuating element.

WARNING!

Danger due to uncontrolled process after running the X.TUNE function.

If the X.TUNE is run under medium pressure, the controller will be incorrectly adjusted. This will result in an uncontrolled process.

- Never run the X.TUNE under medium pressure.
- Secure system against unintentional activation.

5.4.1 Adjustment using the buttons in the device

The 2 buttons for running the X.TUNE are located under the dummy cover.

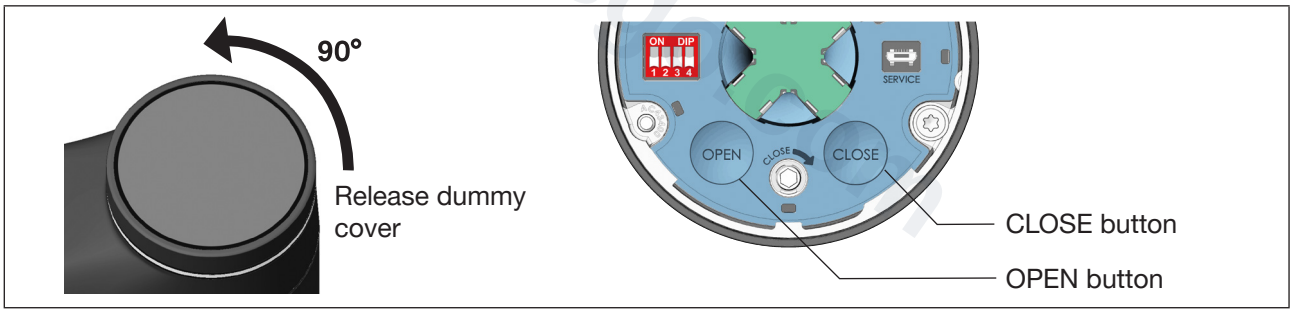

Fig. 11: Adjustment of the position controller using the buttons in the device

→ To release the dummy cover, rotate counter-clockwise by 90°.

→ Remove actuator housing.

Run X.TUNE function:

Do not run the X.TUNE unless it is absolutely essential.

→ Simultaneously hold down the OPEN and CLOSE buttons for 5 s.

The rapidly flashing LEDs indicate that the X.TUNE is running.

When X.TUNE is complete, the LEDs have their previous status
(continuous light for AUTOMATIC operating state, flashing for MANUAL operating state).

MAN 1000312305 EN Version: B Status: RL (released | freigegeben) printed: 22.09.2026

valvesgo.com

6 Changing the seal set

Before the seal set can be replaced, the actuator must be removed from the valve body and the swivel plate must be removed.

DANGER!

Risk of injury from discharge of medium and release of pressure.

It is dangerous to remove a device which is under pressure due to the sudden release of pressure or discharge of medium.

- Before removing a device, switch off the pressure. Deaerate lines.

WARNING!

Risk of injury if the wrong tools are used.

It is dangerous to use unsuitable tools for installation work as the device may be damaged.

- To remove the actuator from the valve body, use an open-end wrench, never a pipe wrench.
- To replace the packing gland, use a special installation wrench, modified socket wrench or open-end wrench.
- Observe specified tightening torques.

Observe exact description for removing the actuator in chapter „5.1 Removing the actuator“ .

6.1 Remove swivel plate

WARNING!

Risk of crushing by mechanically moved parts.

- Switch off supply voltage.
- For devices with SAFEPOS energy-pack: Completely drain SAFEPOS energy-pack. Wait until LED illuminated ring goes out; for this purpose, the LED illuminated display must not be in LED Off mode.
- Do not reach into the openings of the valve body.

→ Knock out dowel pin using a suitable pin punch (see „Tab. 1“)

→ Remove swivel plate.

NOTE!

Important for fault-free and reliable function of the device: Do not damage sealing surface or control contour of the swivel plate.

MAN 1000312305 EN Version: B Status: RL (released | freigegeben) printed: 22.09.2026

valvesgo.com

6.2 Changing the packing gland

WARNING!

Risk of injury from ejected parts.

When the spindle opening is exposed, the individual parts of the packing gland are pressed out at an undefined speed when the relief bore is pressurized.

- Before pressurizing with compressed air, safeguard the ambient area of the discharge opening (e.g. place spindle on a firm base).

Caution!
Not all individual parts of the packing gland are pressed out by pressurizing with compressed air. Usually the upper gaskets remain in the packing gland tube. Replace the pressed out individual parts only.

→ Place the open-end wrench on the body connection. Unscrew spindle guide with the aid of a modified socket wrench.

A modified socket wrench is not included in the spare part set, but can be ordered separately. Order number of the modified socket wrench can be found in the operating instructions on the Internet at:
www.buerkert.de .
If you have any queries, please contact your Bürkert sales office.

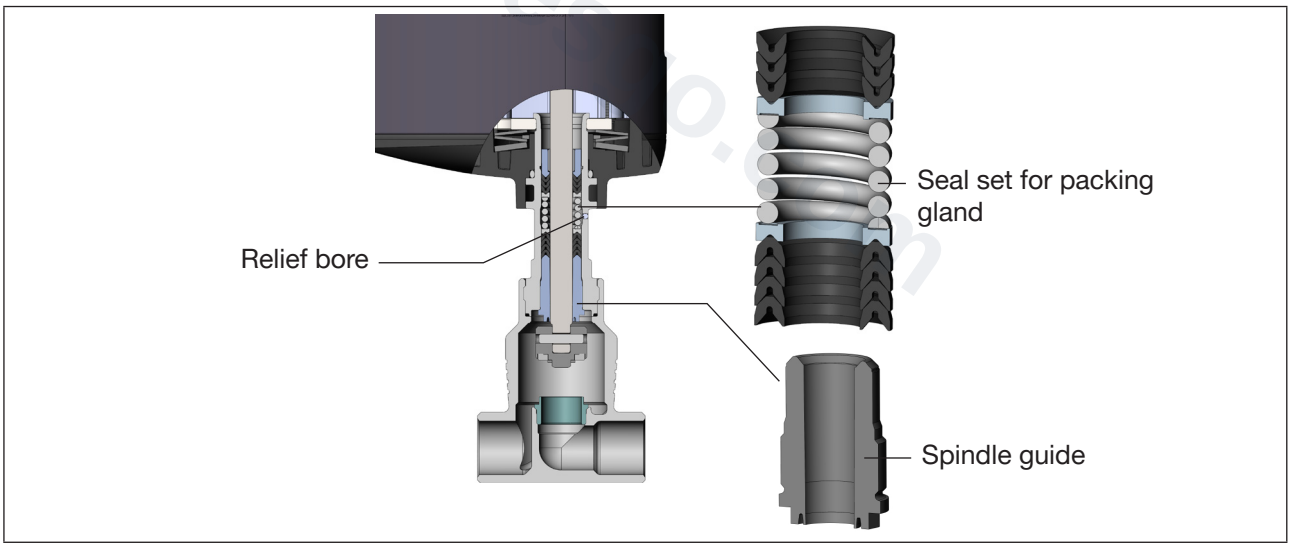

Fig. 12: Spindle guide for the packing gland

→ Place spindle on a firm base.

NOTE!

Individual parts of the packing gland can remain inserted in the threaded part of the packing gland tube. The individual parts are then ready to hand:

1. Before pressurizing the relief bore: Move the spindle with the aid of the mechanical manual control (see chapter „5.1.2“) into the upper position.
2. After pressurizing the relief bore: Move the spindle with the aid of the mechanical manual control into the lower position.

MAN 1000312305 EN Version: B Status: RL (released | freigegeben) printed: 22.09.2026

valvesgo.com

→ Pressurize relief bore with approx. 6 bar compressed air.

WARNING!

Danger if unsuitable lubricants are used.

Unsuitable lubricant may contaminate the medium. In oxygen applications there is a risk of an explosion.

- Only use approved lubricants for specific applications, such as oxygen applications or analytical applications.

→ Grease gaskets of the new packing gland package with the supplied lubricant.

→ Place the individual parts on the spindle in the prescribed direction and sequence.

→ Push packing gland into the packing gland tube.

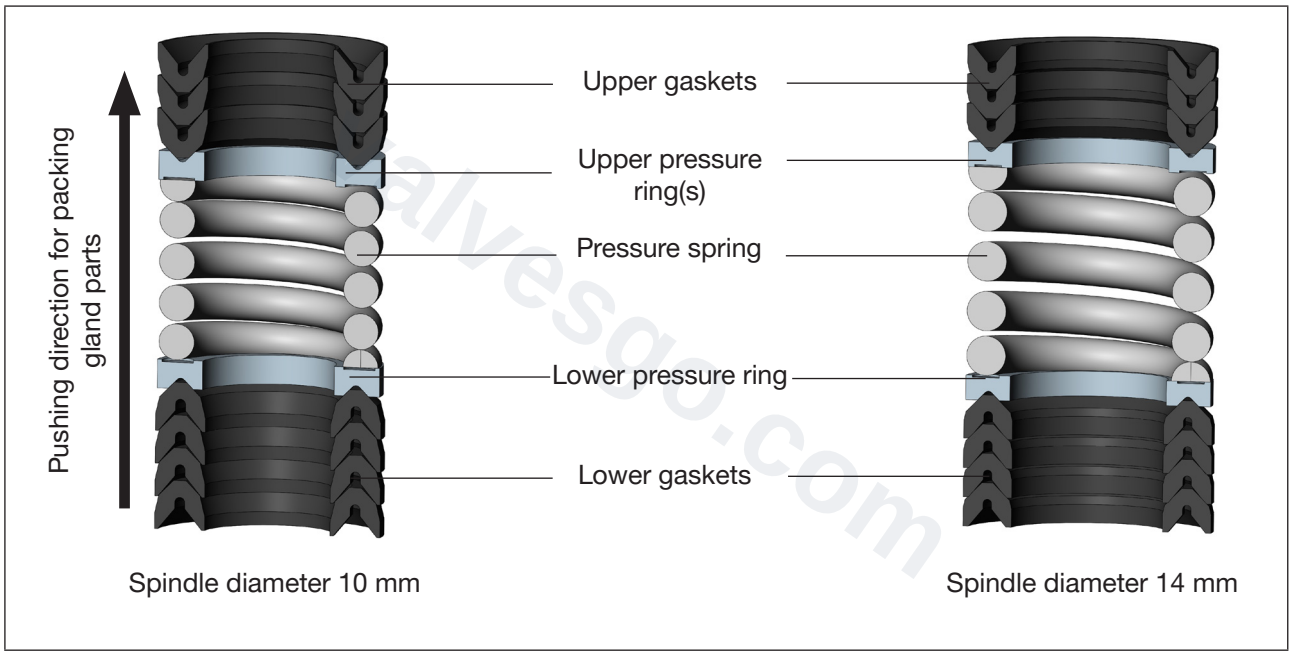

Tab. 3: Seal set for the packing gland

→ Grease spindle guide thread with Klüber paste UH1 96-402.

→ Screw in spindle guide.
⚠ Observe tightening torque (see „Tab. 4“).

Spindle diameter [mm]	Connection size Valve body DN [mm]	Tightening torques [Nm]
10	10, 15, 20, 25, 32 and 40	6
14	50	15

Tab. 4: Spindle guide tightening torques

MAN 1000312305 EN Version: B Status: RL (released | freigegeben) printed: 22.09.2026

valvesgo.com

6.2.1 Changing the packing gland for the connection size 10/15 (DN4-15) and vacuum version

Before the packing gland can be changed, the actuator must be removed from the valve body and the swivel plate must be removed.

An exact description for removing the actuator and the swivel plate can be found in chapters „5.1 Removing the actuator“ and „6.1 Remove swivel plate“ .

→ Clamp the body connection in a holding device.

→ Loosen 4 screws on the actuator base.

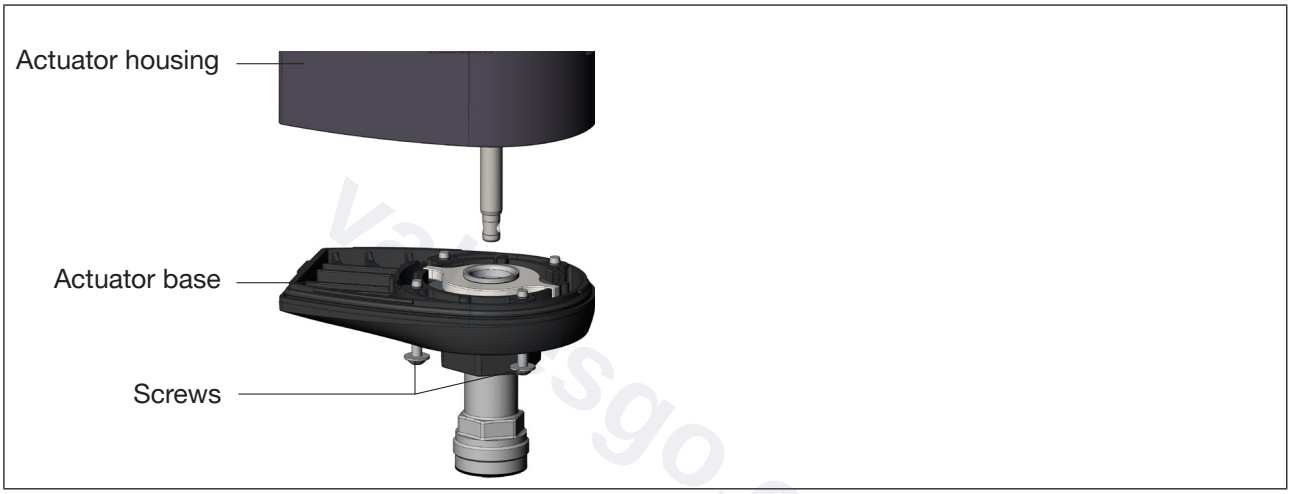

Fig. 13: Removing actuator housing from the actuator base

→ Remove actuator housing from the actuator base.

→ Clamp the actuator base in a holding device.

→ Unscrew spindle guide.

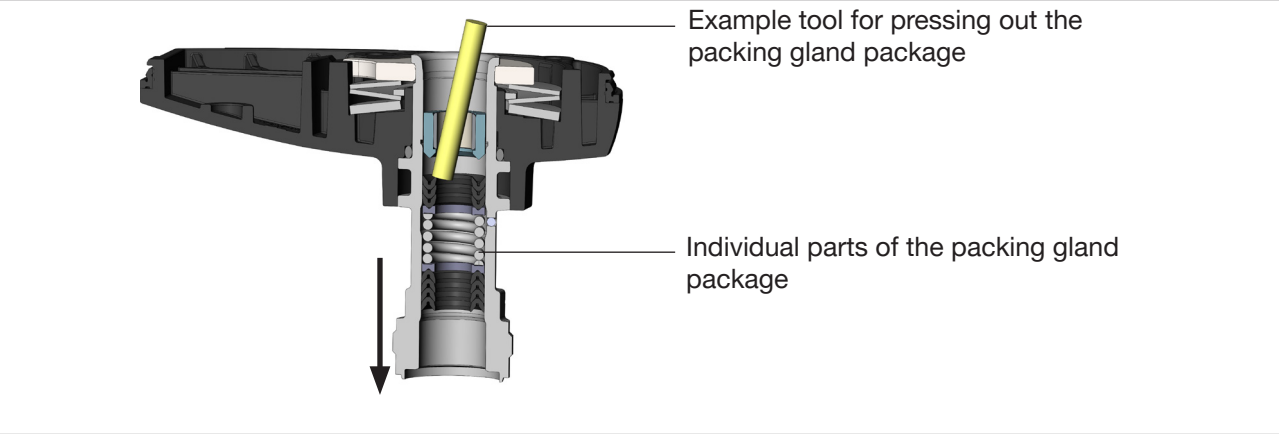

Fig. 14: Pressing out individual parts of the packing gland

→ Using a suitable tool (e.g. screwdriver), carefully press out the packing gland package.

⚠ Do not damage top of guide.

MAN 1000312305 EN Version: B Status: RL (released | freigegeben) printed: 22.09.2026

valvesgo.com

WARNING!

Danger if unsuitable lubricants are used.

Unsuitable lubricant may contaminate the medium. In oxygen applications there is a risk of an explosion.

- Only use approved lubricants for specific applications, such as oxygen applications or analytical applications.

→ Grease gaskets of the new packing gland package with the supplied lubricant.

→ Insert required individual parts of the new packing gland package in the correct sequence (see „Tab. 3“).

→ Grease spindle guide thread. Screw in spindle guide.
⚠ Observe tightening torque (see „Tab. 4“).

→ Place actuator base on the actuator housing.

→ Tighten 4 screws crosswise.
⚠ Observe tightening torque of 5 Nm.

6.3 Install swivel plate

→ Place swivel plate on the spindle.

→ Align holes in the swivel plate with holes in the spindle.

→ Support swivel plate on the cylindrical part using a prism.

→ Position dowel pin and carefully knock in using a hammer.

→ Center the dowel pin relative to the spindle axis.

→ Grease the thread of the valve body.

→ Renew graphite seal.

→ Clamp valve body in a holding device.

→ Screw actuator into the valve body.
⚠ Observe tightening torques (see „Tab. 2“).

Observe exact description for installing the actuator in chapter „5.3“ .

MAN 1000312305 EN Version: B Status: RL (released | freigegeben) printed: 22.09.2026

valvesgo.com

7 CHANGING THE VALVE SET

Before the valve set can be changed, the actuator must be removed from the valve body.

Observe exact description for removing the valve set in chapter „5.1 Removing the actuator“ .

7.1 Changing the valve set

→ Select a suitable tool insert and screw it into the installation tool.

An assembly tool is not included in the valve set, but can be ordered separately. Order number of the assembly tool can be found in the operating instructions on the Internet at: www.buerkert.de.
If you have any queries, please contact your Bürkert sales office.

→ Unscrew the valve seat using the installation tool and a wrench.

→ Clean the thread and sealing surface in the valve body using compressed air.

→ Place the new valve seat on the installation tool.

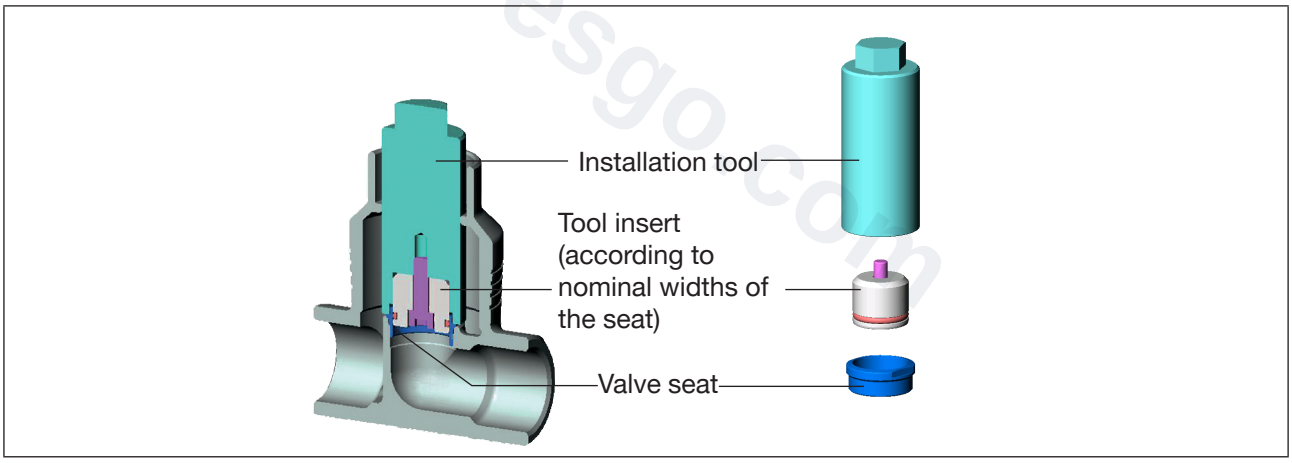

Fig. 15: Replacing the valve seat

WARNING!

Danger if unsuitable lubricants are used.

Unsuitable lubricant may contaminate the medium. In oxygen applications there is a risk of an explosion.

▸ Only use approved lubricants for specific applications, such as oxygen applications or analytical applications.

→ Grease the valve seat thread with a lubricant (e.g. with Klüber paste UH1 95-402 from Klüber).

→ Manually screw the fitted valve seat into the valve body thread.

MAN 1000312305 EN Version: B Status: RL (released | freigegeben) printed: 22.09.2026

valvesgo.com

→ Screw in valve seat tight using torque wrench.
⚠ Observe tightening torque (see „Tab. 5“).

Screw connection		Tightening torques		Tolerance [Nm]
Seat DN	Connection size valve body DN [mm]	Uncoated seats [Nm]	Coated seats [Nm]	
4...15	10, 15	25	20	+3
20	20	35	28	+3
25	25	50	40	+5
32	32	80	65	+5
40	40	100	85	+8
50	50	120	120	+8

Tab. 5: Tightening torques for valve seat installation

→ Grease valve body thread.

→ Replace graphite seal.

→ Clamp the valve body into a holding fixture.

→ Screw actuator into the valve body.
⚠ Observe tightening torques (see „Tab. 2“).

Observe exact description for installing the actuator in chapter „5.3 Installing the actuator“ .

valvesgo.com

MAN 1000312305 EN Version: B Status: RL (released | freigegeben) printed: 22.09.2026

8 CHANGING THE ENERGY PACK

CAUTION!

Risk of injury due to electric shock.

- Before removing the SAFEPOS energy-pack, switch off the supply voltage.
- Completely drain SAFEPOS energy-pack. Wait until the LED illuminated ring goes out; the LED status must not be in LED off mode.

Setting the LED mode is described in the operating instructions at www.buerkert.com.

- The SAFEPOS energy-pack is located in the actuator housing. To replace it, remove the following parts from the actuator:
- Display module or dummy cover
- LED and storage module
- Actuator cover

8.1 Removing the dummy cover

→ Rotate the dummy cover counter-clockwise by 90° and remove from the actuator housing.

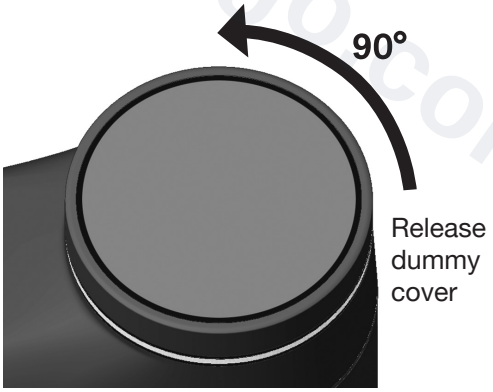

Fig. 16: Removing dummy cover from the actuator housing

MAN 1000312305 EN Version: B Status: RL (released | freigegeben) printed: 22.09.2026

valvesgo.com

8.2 Removing LED and storage module

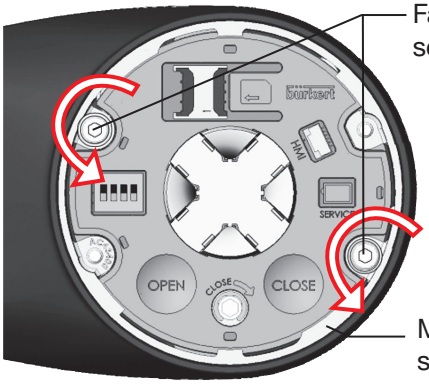

Fig. 17: Removing LED and storage module

→ Remove the 2 fastening screws (hexagon head key, width across flats 3 mm).

→ Take hold of the LED and storage module on both sides of the metal housing and lift out.

8.3 Removing actuator cover

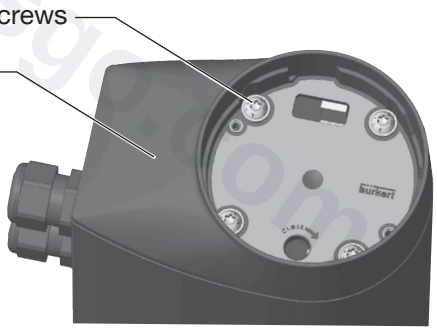

Fig. 18: Removing actuator cover

→ Loosen the 4 fastening screws (T25 hexagonal socket round screws).
The screws are integrated in the actuator cover to prevent them from falling out.

→ Remove actuator cover.

8.4 Replacing the SAFEPOS energy-pack

NOTE!

Recommendation: Before removing the SAFEPOS energy-pack, switch off the supply voltage.

→ Loosen locking screw (T10 hexagonal socket round screw).

→ Completely pull out SAFEPOS energy-pack on the bracket.

MAN 1000312305 EN Version: B Status: RL (released | freigegeben) printed: 22.09.2026

valvesgo.com

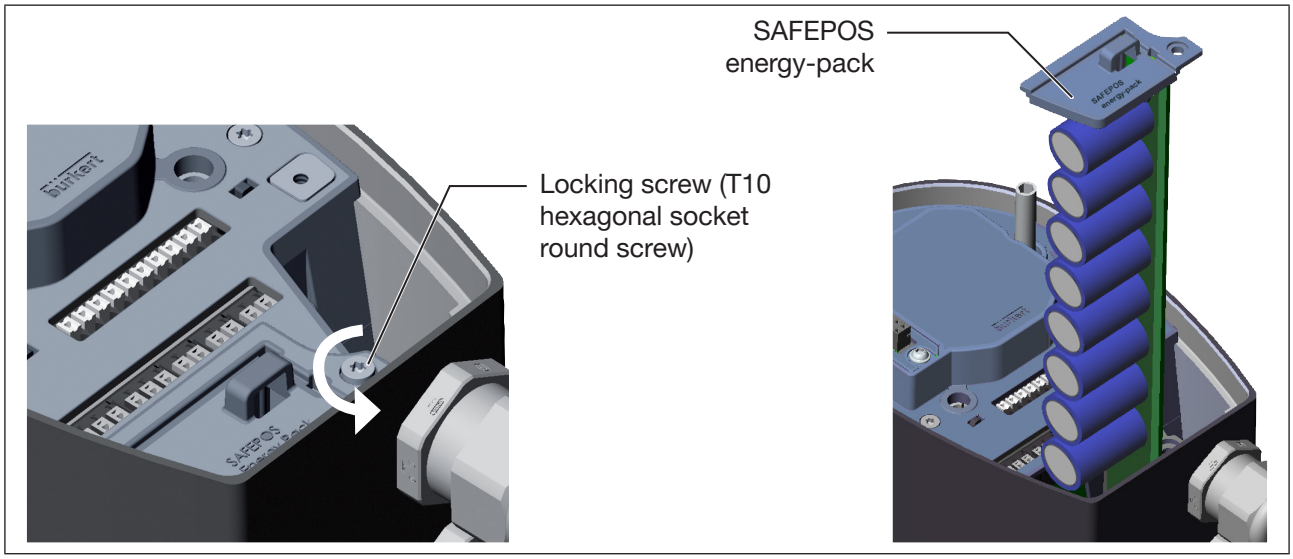

Fig. 19: Removing the SAFEPOS energy-pack

→ Take SAFEPOS energy-pack out of the transport packaging.

→ Insert SAFEPOS energy-pack into the two guiding grooves and push in all the way.

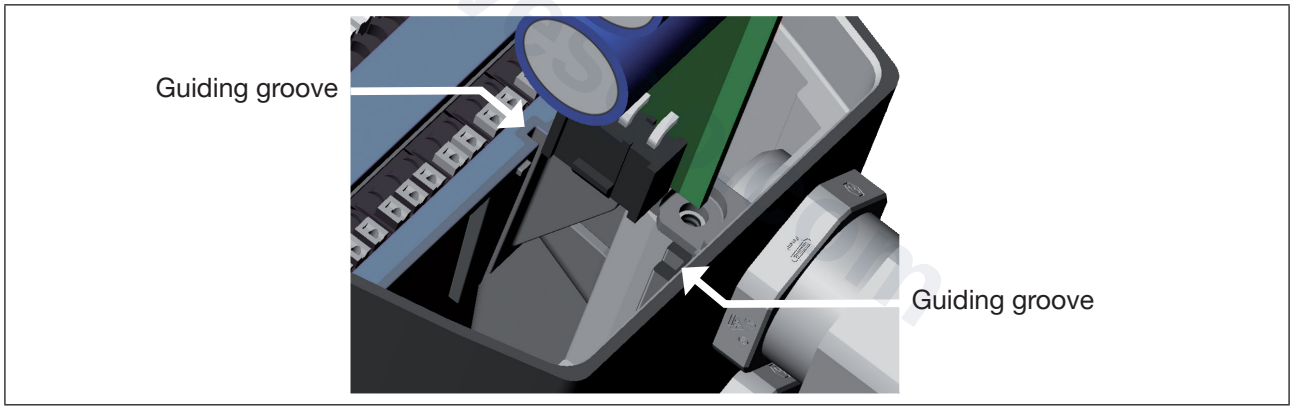

Fig. 20: Inserting the SAFEPOS energy-pack

→ Tighten locking screw (T10 hexagonal socket round screw).

→ Apply supply voltage.

MAN 1000312305 EN Version: B Status: RL (released | freigegeben) printed: 22.09.2026

valvesgo.com

9 ACCESSORIES, SPARE PARTS

CAUTION!

Risk of injury and/or damage due to the use of incorrect parts.

Incorrect accessories and unsuitable spare parts may cause injuries and damage the device and the surrounding area.

▸ Use original accessories and original spare parts from Bürkert only.

The order numbers of the particular spare parts can be found in the operating instructions on the Internet at:
www.buerkert.de

10 PACKAGING, TRANSPORT

NOTE!

Transport damage.

Inadequately protected devices may be damaged during transportation.

- Protect the device against moisture and dirt in shock-resistant packaging during transportation.
- Prevent the temperature from exceeding or dropping below the permitted storage temperature.

11 STORAGE

NOTE!

Incorrect storage may damage the device.

- Store the device in a dry and dust-free location!
- Storage temperature: -40...+70 °C.

12 DISPOSAL

NOTE!

Damage to the environment caused by parts contaminated with media.

- Dispose of the device and packaging in an environmentally friendly manner!
- Observe applicable disposal and environmental regulations.

Beachten Sie die nationalen Abfallbeseitigungsvorschriften.

MAN 1000312305 EN Version: B Status: RL (released | freigegeben) printed: 22.09.2026

valvesgo.com

MAN 1000312305 EN Version: B Status: RL (released | freigegeben) printed: 22.09.2026

valvesgo.com

bürkert
FLUID CONTROL SYSTEMS

MAN 1000312305 EN Version: B Status: RL (released | freigegeben) printed: 22.09.2026

valvesgo.com

www.burkert.com