bürkert
FLUID CONTROL SYSTEMS

Piston valve, 3/2-way, servo-assisted

- Servo-assisted piston valve from DN8 to DN40
- Increased operational safety with pivoted armature technology
- Service-friendly manual override
- Energy-saving “Kick and Drop” or pulse coils
- Explosion-proof variants available on request

Product variants described in the data sheet may differ from the product presentation and description.

Can be combined with

Type 2518
Cable plug,
form A according to
DIN EN 175301-803

Type 2516
Cable plug,
form C according to
DIN EN 175301-803

Type 1087
Timer,
form A according to
DIN EN 175301-803

Type description

The valve 6430 is a servo-assisted 3/2-way piston valve. If the valve is not supplied with auxiliary pilot air, a minimum differential pressure is required for the function. Variants: - For neutral liquids and gases in the pressure range 1-16 bar in the function NC and NO. -For technical vacuums up to 3 bar in the function NC and NO. - With auxiliary pilot air for vacuums up to 8 bar in the function NC and NO. All variants are available as an impulse variant to secure the switching position even in the event of power interruptions. The Type 6430 is equipped with a manual override for start-up or manual operation (exception: impulse variant). To reduce electrical power consumption during operation, coils with integrated “Kick and Drop” (KD) electronics featuring double coil technology are available. A maintenance-free, media-separated 3/2-way pivoted armature valve Type 0331 is used as a pilot valve. In combination with a plug to DIN EN 175301 – 803 Form A, the valves satisfy degree of protection IP65.

DTS 1000395477 EN Version: G Status: RL (released | freigegeben | valide) printed: 21.05.2026

© Christian Bürkert GmbH & Co. KG, Subject to alteration

valvesgo.com

Table of contents

1. General technical data 3

2. Circuit functions 4

3. Approvals and conformities 4

3.1. General notes 4
3.2. Conformity 4
3.3. Standards 4
3.4. Explosion protection 5
3.5. North America (USA/Canada) 5

4. Materials 6

4.1. Bürkert resistApp 6
4.2. Material specifications 6
Standard and vacuum variant 6
External air controlled variant 7

5. Dimensions 8

5.1. Standard and vacuum variant 8
Pilot valve configuration 8
5.2. Vacuum variant Low-Power 9
Pilot valve configuration 9
5.3. External air controlled variant 10
Pilot valve configuration 10
5.4. ATEX/IECEx variant 11
Cable variant 11
Terminal box variant 12
Pilot valve configuration 13

6. Ordering information 14

6.1. Bürkert eShop 14
6.2. Bürkert product filter 14
6.3. Bürkert Product Enquiry Form 14
6.4. Ordering chart 15
Standard variant 15
Standard variant as impulse valve 15
Vacuum variant 16
Vacuum variant as impulse valve 16
Vacuum variant Low-Power 17
6.5. External air controlled variant 18
6.6. Ordering chart accessories 19
Cable plug Type 2516, form C according to DIN EN 175301 - 803 19
Cable plug Type 2518, form A according to DIN EN 175301 - 803 19
Threaded connection, reduction, cylindrical UNI-ISO 228/1 19

DTS 1000395477 EN Version: G Status: RL (released | freigegeben | valide) printed: 21.05.2026

valvesgo.com

valvesgo.com

1. General technical data

Product properties	
Dimensions	Further information can be found in chapter "5. Dimensions" on page 8.
Material	
Seal	NBR, PUR, FKM, (EPDM on request)
Body	Brass (DN 8...DN 20), gunmetal (DN 25...DN 40)
Coil	Epoxy
Orifice	DN 8, DN 12, DN 20, DN 25, DN 40
Circuit function	C and D Further information can be found in chapter "2. Circuit functions" on page 4.
Thermal insulation class of solenoid coil	Epoxy coil class H
Performance data	
Duty cycle	100 % continuous operation (unless otherwise specified on the type plate)
Switching time [1.)]	
DN 8	Opening: 25 ms Closing: 30 ms
DN 12	Opening: 30 ms Closing: 60 ms
DN 20	Opening: 35 ms Closing: 270 ms
DN 25	Opening: 50 ms Closing: 300 ms
DN 40	Opening: 80 ms Closing: 740 ms
Electrical data	
Power consumption	
Standard variant, vacuum variant and external air controlled variant	Inrush AC: 30 VA Hold AC: 15 VA/8 W DC cold/warm: 11 W/8 W
Vacuum variant Low-Power	DC cold/warm: 3.4 W/2 W
Impulse variant	Hold AC: 20 VA/11 W DC cold/warm: 11 W/8 W
Explosion-proof variant	Inrush/Hold: 40 W/3 W
Voltage tolerance	± 10 %
Medium data	
Operating medium [2.)]	
Standard variant	• Neutral gases and liquids (e.g. compressed air, water, low-viscosity oils) • Oil-free and grease-free media with EPDM
Vacuum variant and external air controlled variant	Neutral gases, compressed air, vacuum (low vacuum)
Medium temperature	
With NBR	0 °C...+ 80 °C
With PUR	0 °C...+ 80 °C
With FKM	0 °C...+ 90 °C
With EPDM	0 °C...+ 90 °C
Viscosity	Max. 21 mm^2/s (21 cSt)
Product connections	
Electrical connection	
Standard variant, vacuum variant and external air controlled variant	Plug contacts according to DIN EN 175 301 - 803 form A for cable plug **Type 2518** ▶. Further information can be found in chapter "Cable plug Type 2518, form A according to DIN EN 175301 - 803" on page 19.
Vacuum variant Low-Power	Plug contacts according to DIN EN 175 301 - 803 form C for cable plug **Type 2516** ▶. Further information can be found in chapter "Cable plug Type 2516, form C according to DIN EN 175301 - 803" on page 19.
Explosion-proof variant	With cable outlet 3 × 0.5 mm^2 or terminal box
Port connection	G ¼, G ½, G ¾, G 1, G 1½ (NPT on request)

DTS 1000395477 EN Version: G Status: RL (released | freigegeben | valide) printed: 21.05.2026

valvesgo.com

Approvals and conformities	
Degree of protection	IP65 with cable plug, cable outlet or terminal box
Explosion protection	Further information can be found in chapter "3.4. Explosion protection" on page 5.
North America (USA/Canada)	Further information can be found in chapter "3.5. North America (USA/Canada)" on page 5.
Environment and installation	
Installation position	As required, preferably with actuator upright
Ambient temperature	0 °C...+ 55 °C - 20 °C...+ 55 °C (EPDM)

1.) Measurement at + 20 °C, 6 bar at the valve outlet, opening: pressure build-up 0...90 %, closing: pressure reduction 100...10 %
2.) Media resistance according to the material combination

2. Circuit functions

Symbol	Description
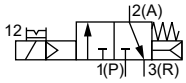	**Circuit function C (CF C)** 3/2-way solenoid valve Servo-controlled, with manual override Normally closed
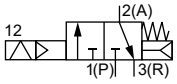	**Circuit function C (CF C)** 3/2-way impulse solenoid valve Servo-controlled
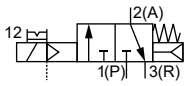	**Circuit function C (CF C)** 3/2-way solenoid valve Servo-controlled, with auxiliary pilot air, with manual override Normally closed
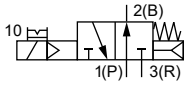	**Circuit function D (CF D)** 3/2-way solenoid valve Servo-controlled, with manual override Normally open
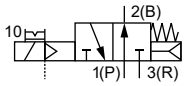	**Circuit function D (CF D)** 3/2-way solenoid valve Servo-controlled, with auxiliary pilot air, with manual override Normally open

3. Approvals and conformities

3.1. General notes

- The approvals and conformities listed below must be stated when making enquiries. This is the only way to ensure that the product complies with all required specifications.
- Not all available variants can be supplied with the below mentioned approvals or conformities.

3.2. Conformity

In accordance with the Declaration of Conformity, the product is compliant with the EU Directives.

3.3. Standards

The applied standards which are used to demonstrate compliance with the EU Directives are listed in the EU-Type Examination Certificate and/or the EU Declaration of Conformity.

DTS 1000395477 EN Version: G Status: RL (released | freigegeben | valide) printed: 21.05.2026

valvesgo.com

3.4. Explosion protection

Approval	Description
	Optional: Explosion protection according to category 2 (zone 1/21) Ex marking of the components according to the following table:

Coil Type ACP016	
Coils with cable outlet	**Coils with terminal box**
ATEX: EPS 16 ATEX 1 111 X II 2 G Ex mb IIC T4 Gb II 2 D Ex mb IIIC T130 °C Db **IECEx:** IECEx EPS 16.0049X Ex mb IIC T4 Gb Ex mb IIIC T130 °C Db	**ATEX:** PTB 15 ATEX 1011 U II 2G Ex eb mb IIC T4 Gb II 2D EX mb tb IIIC T130 °C **IECEx:** IECEx PTB 15.0037 U II eb mb IIC T4 Gb II mb tb IIIC T130 °C Db

3.5. North America (USA/Canada)

Approval	Description
	Optional: UL Recognized for the USA and Canada (valid for coils) The coils are UL Recognized for the USA and Canada according to: • UL 429 (electrically operated valves) • CAN/CSA-C22.2 No. 139
	Optional: UL Hazardous Locations – Explosion Protection (valid for coils) UL Listed for Hazardous Locations for USA and Canada Class I, Zone 1 Class I, Division 2, Group A, B, C and D Class II + III, Division 2, Group F and G
	Optional: FM (Factory Mutual) – Explosion Protection (valid for coils) FM for Hazardous Locations for USA and Canada Class I, Zone 1 Class I, Division 1, Groups A, B, C and D Class II + III, Division 1, Groups E, F and G

DTS 1000395477 EN Version: G Status: RL (released | freigegeben | valide) printed: 21.05.2026

valvesgo.com

4. Materials

4.1. Bürkert resistApp

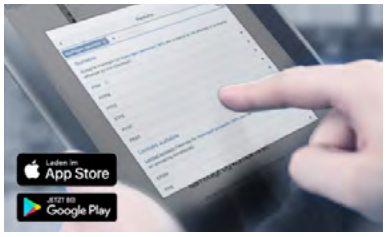

Bürkert resistApp – Chemical resistance chart

You want to ensure the reliability and durability of the materials in your individual application case? Verify your combination of media and materials on our website or in our resistApp.

Start chemical resistance check

4.2. Material specifications

Standard and vacuum variant

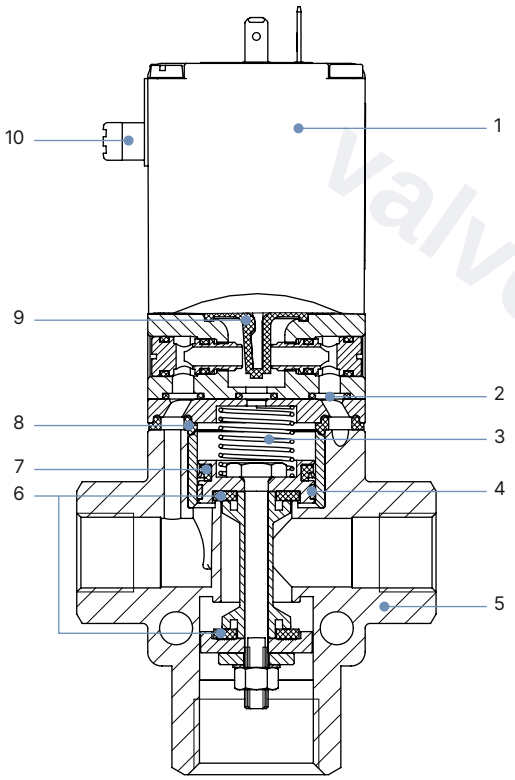

No.	Element	Material
1	Coil	Epoxy
2	O-ring	NBR, FKM, EPDM
3	Spring [1.)]	Stainless steel 1.4310
4	Piston ring	PTFE
5	Housing	Brass, gunmetal
6	Seat seal	NBR, PUR, FKM, EPDM
7	Piston seal	NBR, FKM, EPDM
8	Seal	NBR, FKM, EPDM
9	Diaphragm	NBR, FKM, EPDM
10	Manual override	PA

1.) Only for the vacuum variant

DTS 1000395477 EN Version: G Status: RL (released | freigegeben | valide) printed: 21.05.2026

valvesgo.com

External air controlled variant

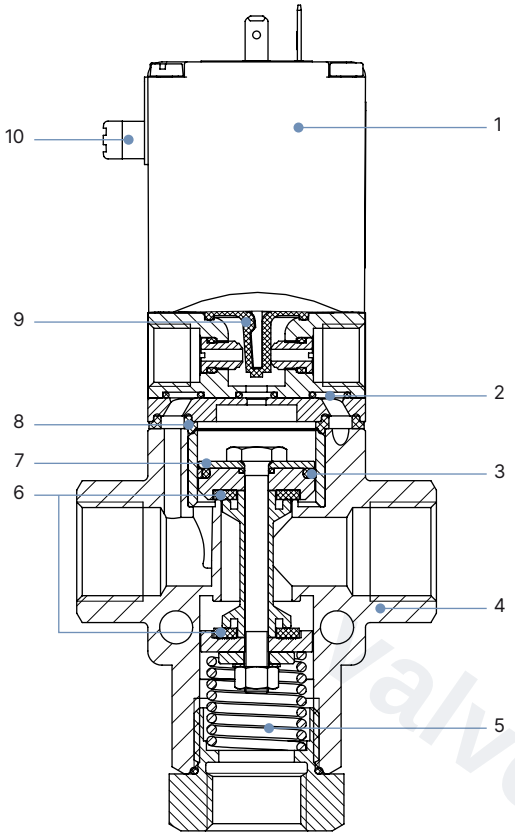

No.	Element	Material
1	Coil	Epoxy
2	O-ring	NBR, FKM, EPDM
3	Piston ring	PTFE
4	Housing	Brass, gunmetal
5	Spring	Stainless steel 1.4310
6	Seat seal	NBR, PUR, FKM, EPDM
7	Piston seal	NBR, FKM, EPDM
8	Seal	NBR, FKM, EPDM
9	Diaphragm	NBR, FKM, EPDM
10	Manual override	PA

DTS 1000395477 EN Version: G Status: RL (released | freigegeben | valide) printed: 21.05.2026

valvesgo.com

valvesgo.com

5. Dimensions

5.1. Standard and vacuum variant

Note:

- Dimensions in mm
- The dimensions A1, B1, E1 and F1 apply to G thread.
- The dimensions A2, B2, E2 and F2 apply to NPT thread.
- The figure shows the valve in circuit function C with ports P, R and A/B (manual override via port P). In circuit function D, the manual override is located above port A/B.

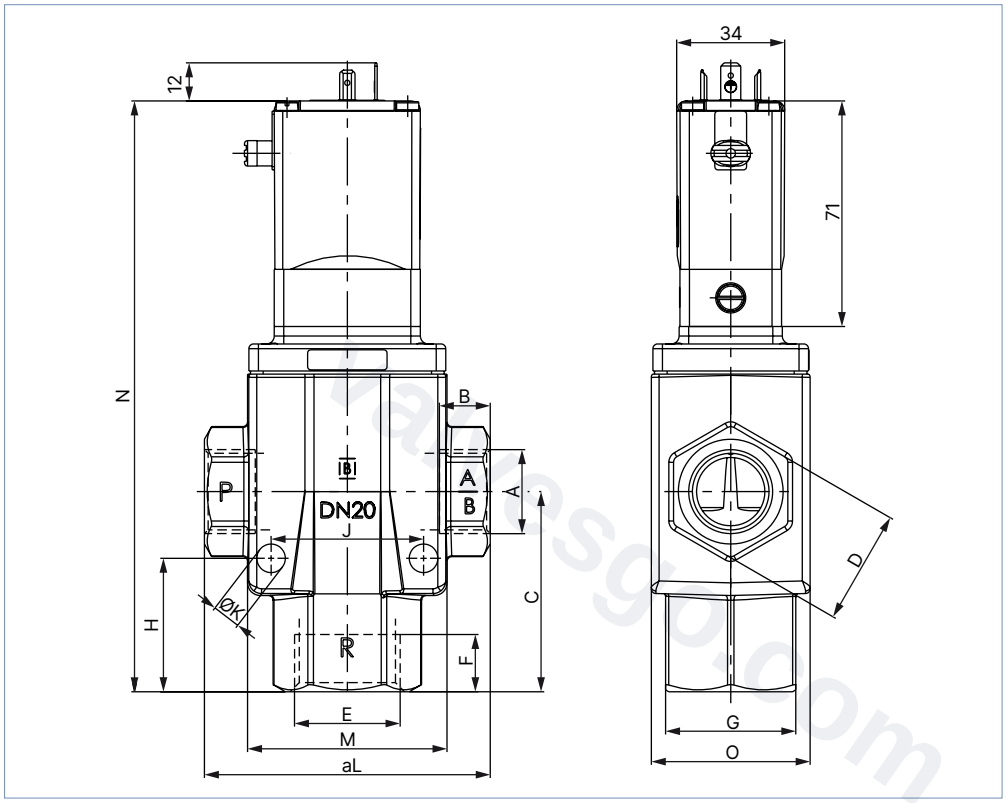

DN	A1	B1	A2	B2	C	D	E1	F1	E2	F2	G	H	J	K	L	M	N	O
8	G ¼	12	NPT ¼	10	34.5	SW22	G ⅜	12	NPT ⅜	10.3	SW22	23	30	7	65	46	124.8	33
12	G ½	14	NPT ½	13.7	47	SW27	G ¾	16	NPT ¾	14	SW32	31	34	7	76	46	150.5	33
20	G ¾	16	NPT ¾	14	63	SW36	G 1	18	NPT 1	16.8	SW41	42	48	9	90	63	186	50
25	G 1	18	NPT 1	16.8	74.5	SW41	G 1¼	20	NPT 1¼	17.3	54	44	66	9	110	82	210.5	60
40	G 1½	22.5	NPT 1½	17.3	104	SW55	G 2	26.5	NPT 2	17.6	78	65	93	13	153	117	264	88

Pilot valve configuration

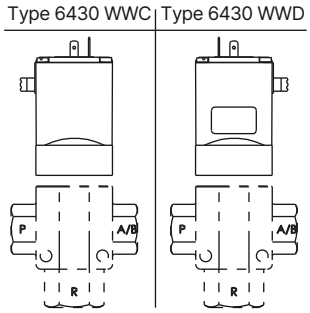

DTS 1000395477 EN Version: G Status: RL (released | freigegeben | valide) printed: 21.05.2026

valvesgo.com

5.2. Vacuum variant Low-Power

Note:

- Dimensions in mm
- The dimensions A1, B1, E1 and F1 apply to G thread.
- The dimensions A2, B2, E2 and F2 apply to NPT thread.
- The figure shows the valve in circuit function C with ports P, R and A/B (manual override via port A/B). In circuit function D, the manual override is located above port P.

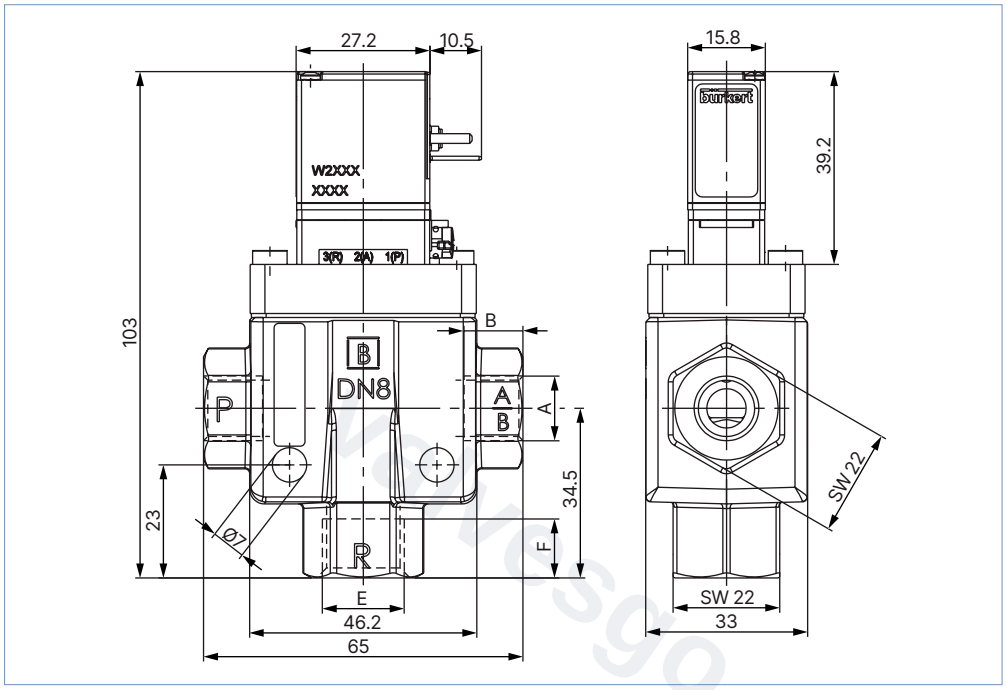

DN	A1	B1	A2	B2	E1	F1	E2	F2
8	G ¼	12	NPT ¼	10	G ⅜	12	NPT ⅜	10.3

Pilot valve configuration

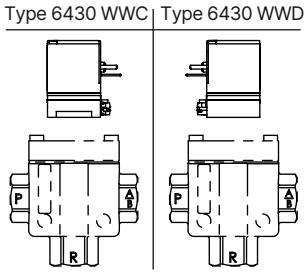

DTS 1000395477 EN Version: G Status: RL (released | freigegeben | valide) printed: 21.05.2026

valvesgo.com

5.3. External air controlled variant

Note:

- Dimensions in mm
- The dimensions A1, B1, E1 and F1 apply to G thread.
- The dimensions A2, B2, E2 and F2 apply to NPT thread.
- The figure shows the valve in circuit function C with ports P, R and A/B (manual override via port P).
  In circuit function D, the manual override is located above port A/B.

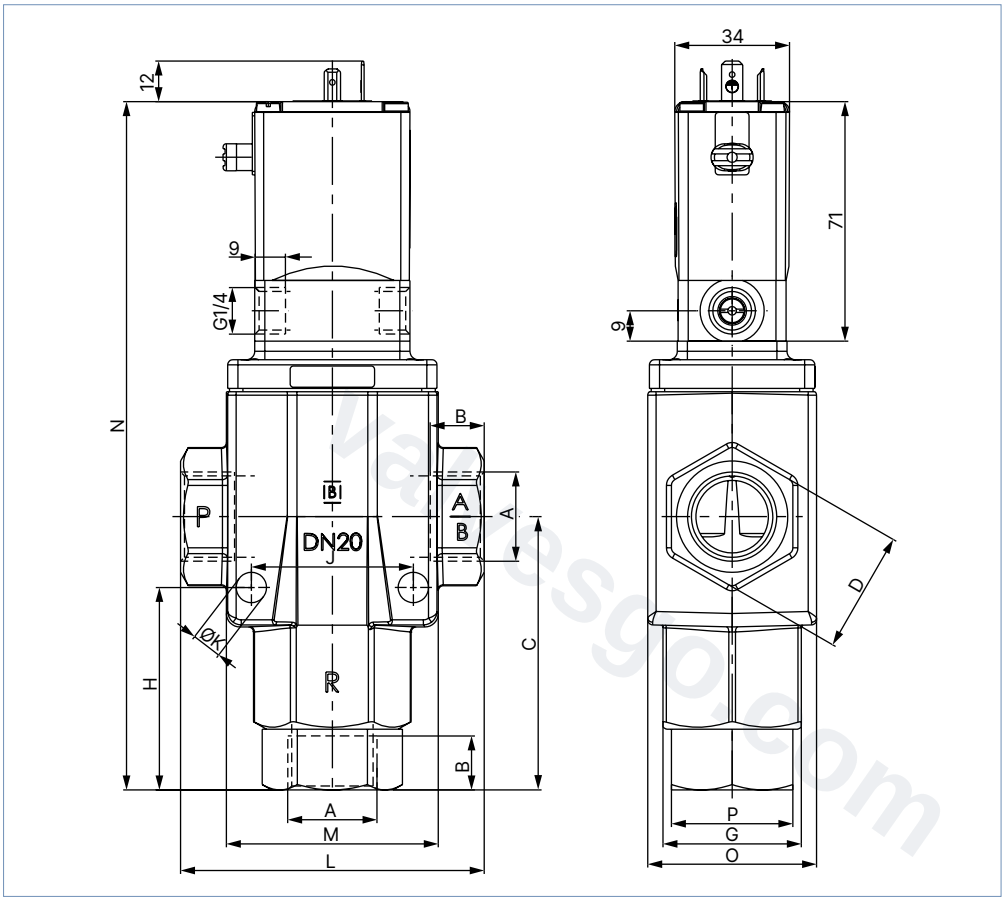

DN	A1	B1	A2	B2	C	D	G	H	J	K	L	M	N	O	P
8	G ¼	12	NPT ¼	10	47.5	SW22	SW22	36	30	7	65	46	137.8	33	SW19
12	G ½	14	NPT ½	13.7	59	SW27	SW32	43	34	7	76	46	162.5	33	SW32
20	G ¾	16	NPT ¾	14	81	SW36	SW41	60	48	9	90	63	204	50	SW36

Pilot valve configuration

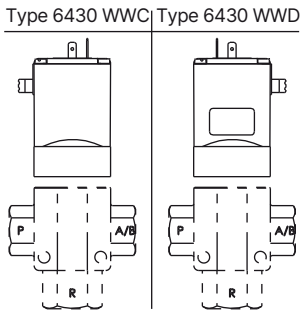

DTS 1000395477 EN Version: G Status: RL (released | freigegeben | valide) printed: 21.05.2026

valvesgo.com

5.4. ATEX/IECEx variant

Note:

- Dimensions in mm
- The dimensions A1, B1, E1 and F1 apply to G thread.
- The dimensions A2, B2, E2 and F2 apply to NPT thread.

Cable variant

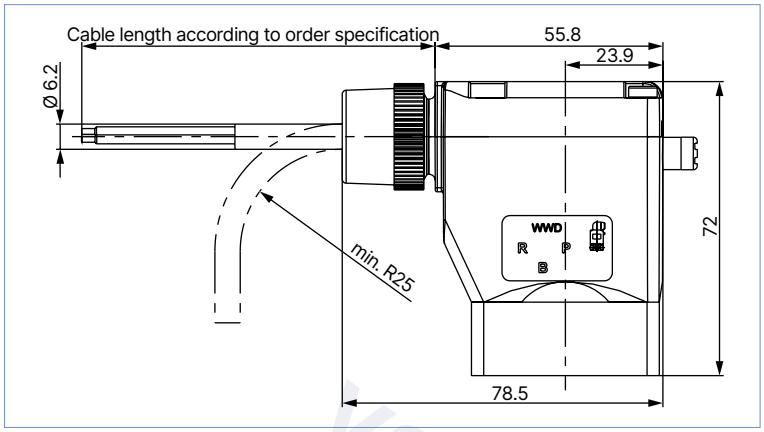

DTS 1000395477 EN Version: G Status: RL (released | freigegeben | valide) printed: 21.05.2026

valvesgo.com

valvesgo.com

Terminal box variant

Note:
The figure shows the valve in circuit function C with ports P, R and A/B (manual override via port P).
In circuit function D, the manual override is located above port A/B.

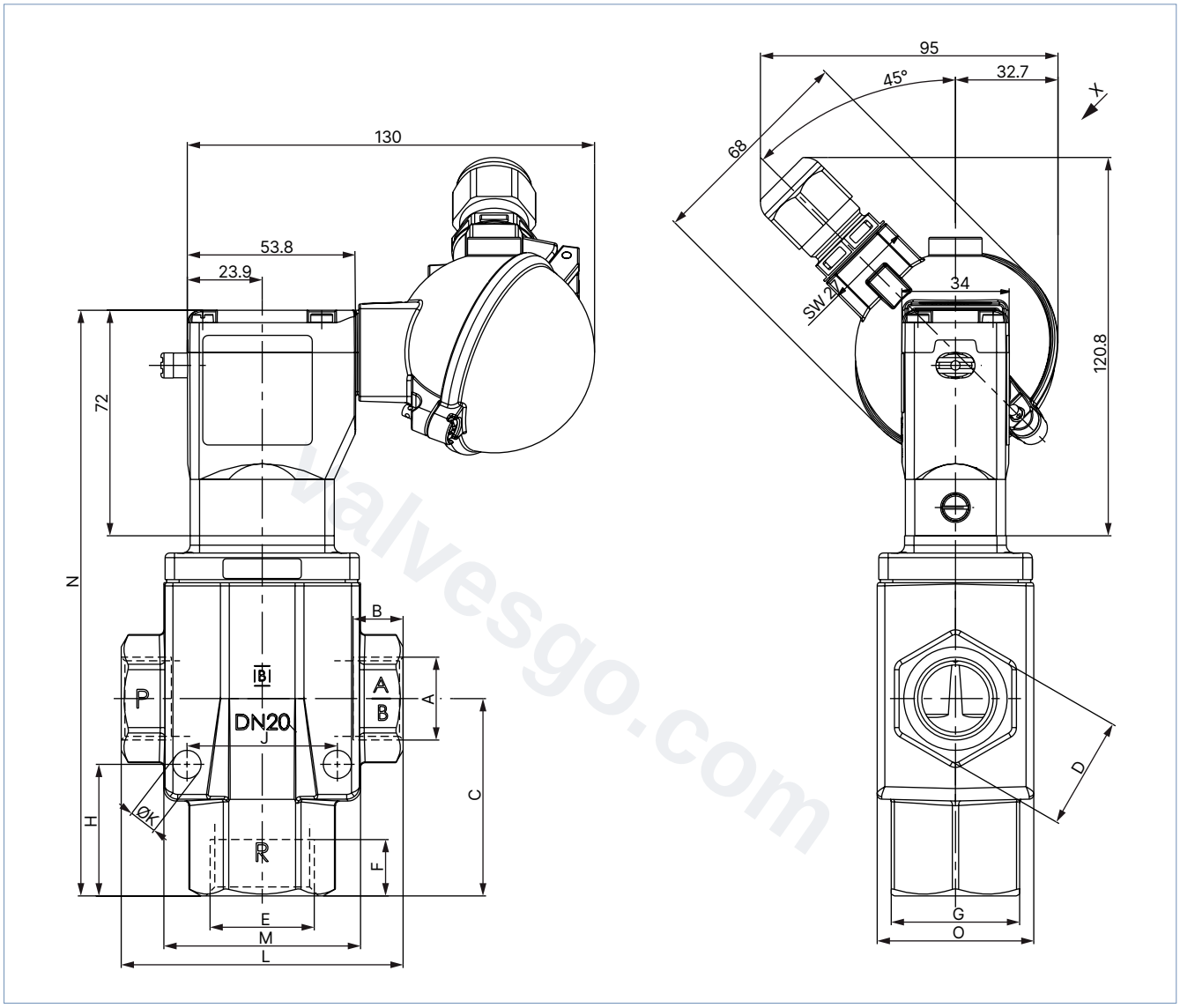

DTS 1000395477 EN Version: G Status: RL (released | freigegeben | valide) printed: 21.05.2026

valvesgo.com

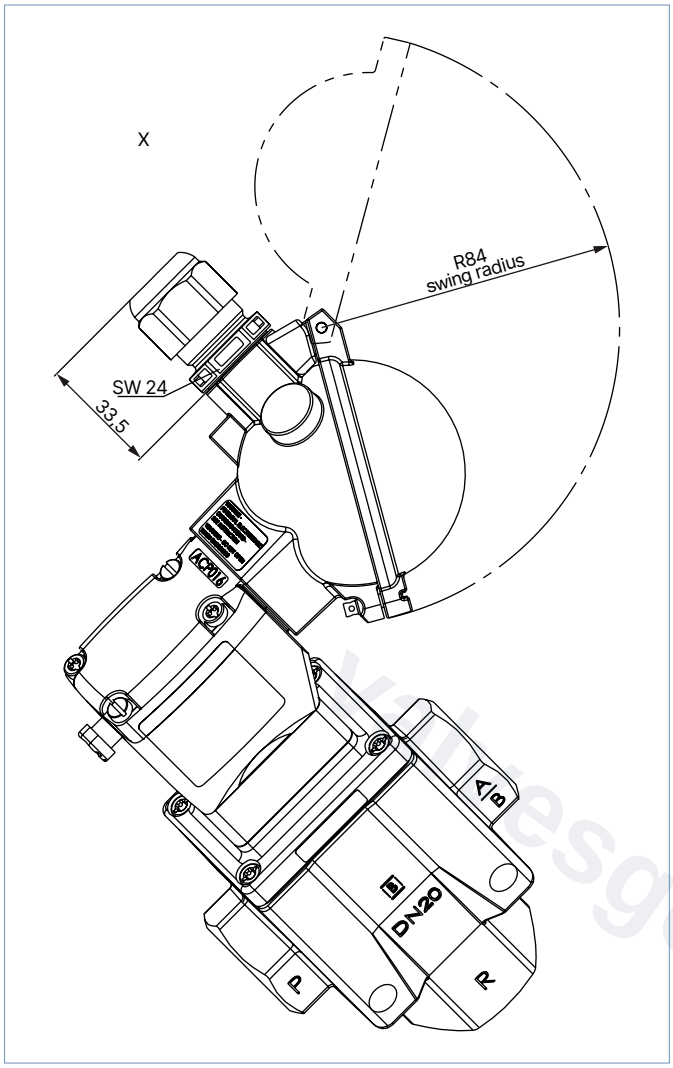

DN	A1	B1	A2	B2	C	D	E1	F1	E2	F2	G	H	J	K	L	M	N	O
8	G ¼	12	NPT ¼	10	34.5	SW22	G ⅜	12	NPT ⅜	10.3	SW22	23	30	7	65	46	124.8	33
12	G ½	14	NPT ½	13.7	47	SW27	G ¾	16	NPT ¾	14	SW32	31	34	7	76	46	150.5	33
20	G ¾	16	NPT ¾	14	63	SW36	G 1	18	NPT 1	16.8	SW41	42	48	9	90	63	186	50
25	G 1	18	NPT 1	16.8	74.5	SW41	G 1¼	20	NPT 1¼	17.3	54	44	66	9	110	82	210.5	60
40	G 1½	22.5	NPT 1½	17.3	104	SW55	G 2	26.5	NPT 2	17.6	78	65	93	13	153	117	264	88

Pilot valve configuration

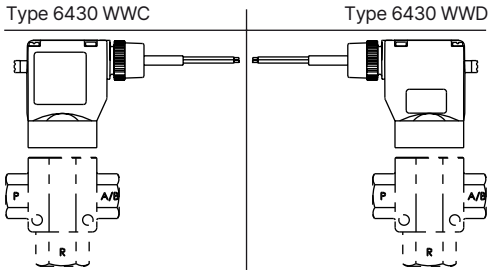

DTS 1000395477 EN Version: G Status: RL (released | freigegeben | valide) printed: 21.05.2026

valvesgo.com

6. Ordering information

6.1. Bürkert eShop

Bürkert eShop – Easy ordering and quick delivery

You want to find your desired Bürkert product or spare part quickly and order directly? Our online shop is available for you 24/7. Sign up and enjoy all the benefits.

Order online now

6.2. Bürkert product filter

Bürkert product filter – Get quickly to the right product

You want to select products comfortably based on your technical requirements?
Use the Bürkert product filter and find suitable articles for your application quickly and easily.

Try out our product filter

6.3. Bürkert Product Enquiry Form

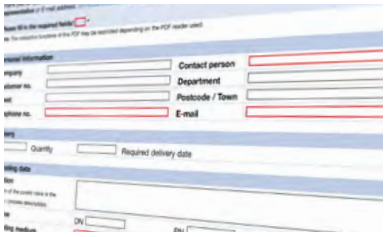

Bürkert Product Enquiry Form – Your enquiry quickly and compactly

Would you like to make a specific product enquiry based on your technical requirements? Use our Product Enquiry Form for this purpose. There you will find all the relevant information for your Bürkert contact. This will enable us to provide you with the best possible advice.

Fill out the form now

DTS 1000395477 EN Version: G Status: RL (released | freigegeben | valide) printed: 21.05.2026

valvesgo.com

6.4. Ordering chart

Standard variant

Note:

- Please note that the cable plug must be ordered separately, see **"Cable plug Type 2516, form C according to DIN EN 175301 - 803" on page 19** or separate data sheet **Type 2518** ▶.
- Further variants are available on request.
- Valid for all articles in the following table: Body material brass (DN 25 and DN 40 gunmetal)

Circuit function	Port connection P and A/B	Orifice	K_V value water	Pressure range	Weight	Article no.		
						024/DC	024/50	230/50
		[mm]	[m³/h] 1.)	[bar] 2.)	[kg]	[V/Hz]	[V/Hz]	[V/Hz]
G-inner thread, seal material NBR (DN 12 seat seal PUR / external sealing NBR)								
CF C 3/2-way solenoid valve Servo-controlled, with manual override Normally closed 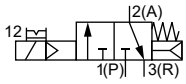	G ¼	8	0.95	1...16	0.9	351164	357602	357604
	G ½	12	2.6	1...16	1.1	351175	357609	357611
	G ¾	20	6.2	1...16	2.2	351235	357615	357617
	G 1	25	10.0	1...10	2.8	351241	357621	357622
	G 1 ½	40	22.8	1...10	6.1	351247	357623	357624
CF D 3/2-way solenoid valve Servo-controlled, with manual override Normally open 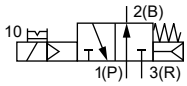	G ¼	8	0.95	1...16	0.9	357601	357603	357605
	G ½	12	2.6	1...16	1.1	357608	357610	357612
	G ¾	20	6.2	1...16	2.2	357614	357616	357618
	G 1	25	10.0	1...10	2.8	357619	o. r.	364298
	G 1 ½	40	22.8	1...10	6.1	364302	o. r.	364299

o. r. = on request
1.) Measurement at + 20 °C, 1 bar at the valve inlet and free outlet
2.) Pressure data: overpressure to atmospheric pressure

Standard variant as impulse valve

Note:
Valid for all articles in the following table: Body material brass (DN 25 and DN 40 gunmetal)

Circuit function	Port connection P and A/B	Orifice	K_V value water	Pressure range	Weight	Article no.	
						024/DC	024/50
		[mm]	[m³/h] 1.)	[bar] 2.)	[kg]	[V/Hz]	[V/Hz]
G-inner thread, seal material NBR (DN 12 seat seal PUR / external seal NBR)							
CF C 3/2-way impulse solenoid valve Servo-controlled 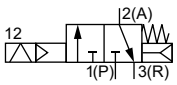	G ¼	8	0.95	1...16	0.9	357606	o. r.
	G ½	12	2.6	1...16	1.1	357613	o. r.
	G ¾	20	6.2	1...16	2.2	o. r.	o. r.
	G 1	25	10.0	1...10	2.8	o. r.	o. r.
	G 1 ½	40	22.8	1...10	6.1	o. r.	o. r.

o. r. = on request
1.) Measurement at + 20 °C, 1 bar at the valve inlet and free outlet
2.) Pressure data: overpressure to atmospheric pressure

DTS 1000395477 EN Version: G Status: RL (released | freigegeben | valide) printed: 21.05.2026

valvesgo.com

Vacuum variant

Note:

- Please note that the cable plug must be ordered separately, see "Cable plug Type 2516, form C according to DIN EN 175301 - 803" on page 19 or separate data sheet **Type 2518** ▶.
- Please note that the vacuum variant requires a minimum pressure difference of 0.5 bar and that it is only suitable for rough vacuum (atmospheric pressure (1013 hPa) to 100 Pa (1 mbar)).
- Further variants are available on request.
- Valid for all articles in the following table: Body material brass (DN 25 and DN 40 gunmetal)

Circuit function	Port connection P and A/B	Orifice	K_V value water	Pressure range	Weight	Article no.	
						024/DC	024/50
		[mm]	[m³/h] 1.)	[bar] 2.) 3.)	[kg]	[V/Hz]	[V/Hz]
G-inner thread, seal material NBR							
CF C 3/2-way solenoid valve Servo-controlled, with manual override Normally closed 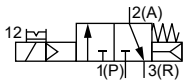	G ¼	8	0.95	Vacuum up to 3	0.9	351169	357628
	G ½	12	2.6	Vacuum up to 3	1.1	351179	357631
	G ¾	20	6.2	Vacuum up to 3	2.2	351237	357634
	G 1	25	10.0	Vacuum up to 3	2.8	351243	357637
	G 1 ½	40	22.8	Vacuum up to 3	6.1	351249	o. r.
CF D 3/2-way solenoid valve Servo-controlled, with manual override Normally open 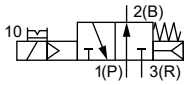	G ¼	8	0.95	Vacuum up to 3	0.9	357627	357629
	G ½	12	2.6	Vacuum up to 3	1.1	357630	357632
	G ¾	20	6.2	Vacuum up to 3	2.2	357633	357635
	G 1	25	10.0	Vacuum up to 3	2.8	357636	357638
	G 1 ½	40	22.8	Vacuum up to 3	6.1	o. r.	o. r.

o. r. = on request
1.) Measurement at + 20 °C, 1 bar at the valve inlet and free outlet
2.) Pressure data: overpressure to atmospheric pressure
3.) A minimum differential pressure of 0.5 bar is required for switching.

Vacuum variant as impulse valve

Note:
Valid for all articles in the following table: Body material brass (DN 25 and DN 40 gunmetal)

Circuit function	Port connection P and A/B	Orifice	K_V value water	Pressure range	Weight	Article no.	
						024/DC	024/50
		[mm]	[m³/h] 1.)	[bar] 2.) 3.)	[kg]	[V/Hz]	[V/Hz]
G-inner thread, seal material NBR							
CF C 3/2-way impulse solenoid valve Servo-controlled 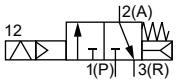	G ¼	8	0.95	Vacuum up to 3	0.9	357639	o. r.
	G ½	12	2.6	Vacuum up to 3	1.1	357640	o. r.
	G ¾	20	6.2	Vacuum up to 3	2.2	357641	o. r.
	G 1	25	10.0	Vacuum up to 3	2.8	357642	o. r.
	G 1 ½	40	22.8	Vacuum up to 3	6.1	357643	o. r.

o. r. = on request
1.) Measurement at + 20 °C, 1 bar at the valve inlet and free outlet
2.) Pressure data: overpressure to atmospheric pressure
3.) A minimum differential pressure of 0.5 bar is required for switching.

DTS 1000395477 EN Version: G Status: RL (released | freigegeben | valide) printed: 21.05.2026

valvesgo.com

Vacuum variant Low-Power

Note:

- Please note that the cable plug must be ordered separately, see **"Cable plug Type 2516, form C according to DIN EN 175301 - 803" on page 19** or separate data sheet **Type 2516** ▶.
- Please note that the vacuum variant requires a minimum pressure difference of 0.5 bar and that it is only suitable for rough vacuum (atmospheric pressure (1013 hPa) to 100 Pa (1 mbar)).
- Further variants are available on request.
- Valid for all articles in the following table: Body material brass (DN 25 and DN 40 gunmetal)

Circuit function	Port connection P and A/B	Orifice	K_V value water	Pressure range	Weight	Article no.
						024/DC
		[mm]	[m³/h] 1.)	[bar] 2.) 3.)	[kg]	[V/Hz]
G-inner thread, seal material NBR						
CF C 3/2-way solenoid valve Servo-controlled, with manual override Normally closed 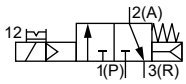	G ¼	8	0.95	Vacuum up to 1	0.6	357626
CF D 3/2-way solenoid valve Servo-controlled, with manual override Normally open 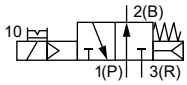	G ¼	8	0.95	Vacuum up to 1	0.6	357625

1.) Measurement at + 20 °C, 1 bar at the valve inlet and free outlet
2.) Pressure data: overpressure to atmospheric pressure
3.) A minimum differential pressure of 0.5 bar is required for switching.

DTS 1000395477 EN Version: G Status: RL (released | freigegeben | valide) printed: 21.05.2026

valvesgo.com

valvesgo.com

6.5. External air controlled variant

Note

- Please note that the cable plug must be ordered separately, see "Cable plug Type 2518, form A according to DIN EN 175301-803" on page 19 or separate data sheet **Type 2518** ▶.
- Please note that the variant controlled by external air requires an auxiliary control air of at least 2 bar above the operating pressure.
- Further variants are available on request.
- Valid for all articles in the following table: Body material brass (DN 25 and DN 40 gunmetal)

Circuit function	Port connection P and A/B	Orifice	K_V value water	Pressure range	Weight	Article no.
						024/DC
		[mm]	[m³/h] 1.)	[bar] 2.) 3.)	[kg]	[V/Hz]
G-inner thread, seal material NBR (DN 8 and DN 12 seat seal PUR / external seal NBR)						
CF C 3/2-way solenoid valve Servo-controlled, with auxiliary pilot air, with manual override Normally closed 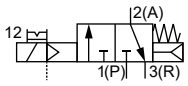	G ¼	8	0.95	Vacuum up to 8	0.9	351172
	G ½	12	2.6	Vacuum up to 8	1.1	351181
	G ¾	20	6.2	Vacuum up to 8	2.3	351239
CF D 3/2-way solenoid valve Servo-controlled, with auxiliary pilot air, with manual override Normally open 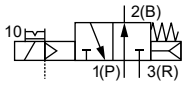	G ¼	8	0.95	Vacuum up to 8	0.9	357644
	G ½	12	2.6	Vacuum up to 8	1.1	357645
	G ¾	20	6.2	Vacuum up to 8	2.3	357646

1.) Measurement at + 20 °C, 1 bar at the valve inlet and free outlet
2.) Pressure data: overpressure to atmospheric pressure
3.) The external air-controlled variant requires an auxiliary control air of at least 2 bar above the operating pressure.

Further variants on request

Additional
Electrical position feedback

Material
- FKM
- EPDM

Approval
- cURus – coil approval
- Pilot valve cURus (UL Recognized)
- ATEX/IECEx

Voltage
Further voltages on request

Process connection
NPT

DTS 1000395477 EN Version: G Status: RL (released | freigegeben | valide) printed: 21.05.2026

valvesgo.com

6.6. Ordering chart accessories

Cable plug Type 2516, form C according to DIN EN 175301 - 803

Note:

- Dimensions in mm
- The delivery of cable plug includes a flat seal and a fastening screw.
- For further variants see data sheet **Type 2516** ▶.

Cable plug	Dimensions	Variant	Voltage	Article no.
	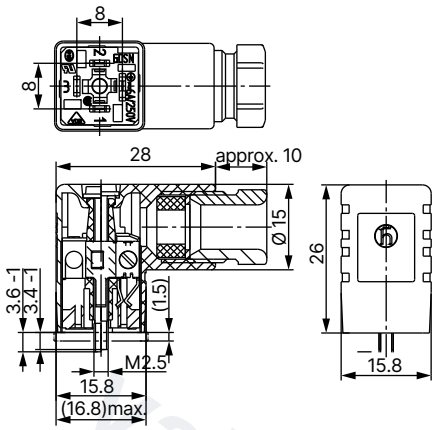	Without wiring	0...250 V AC/DC	303141
		With LED	12...24 V AC/DC	303145
		With LED and varistor	12...24 V AC/DC	303148
		With rectifier, LED and varistor	12...24 V AC/DC	303142

Cable plug Type 2518, form A according to DIN EN 175301 - 803

Note:

- Dimensions in mm
- For further variants see data sheet **Type 2518** ▶.

Cable plug	Dimensions	Variant	Voltage	Article no.
	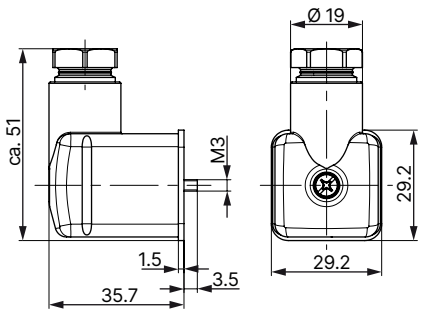	Without wiring (AC/DC)	0...250 V AC/DC	314802
		With LED (AC/DC)	12...24 V AC/DC	314812
		With LED and varistor (AC/DC)	12...24 V AC/DC	314820
		With rectifier, LED and varistor	12...24 V AC/DC	314816
		Without wiring (AC/DC) with silicone seal for higher ambient temperature, e.g. steam variant (NA07)	0...250 V AC/DC	361687

Threaded connection, reduction, cylindrical UNI-ISO 228/1

Reduction	Material	Max. nominal pressure	F	F1	L	Packaging unit	Article no.
		[bar]			[mm]	[piece]	
	Nickel-plated brass	60	G ½	G ⅜	15.5	10	780140

DTS 1000395477 EN Version: G Status: RL (released | freigegeben | valide) printed: 21.05.2026

valvesgo.com