bürkert
FLUID CONTROL SYSTEMS

MAN 1000339265 EN Version: E Status: RL (released | freigegeben) printed: 10.10.2026

Type 0127

ROCKER VALVE

2/2-way and 3/2-way solenoid valve

valvesgo.com

Operating Instructions

valvesgo.com

MAN 1000339265 EN Version: E Status: RL (released | freigegeben) printed: 10.10.2026

valvesgo.com

We reserve the right to make technical changes without notice.
© Bürkert Werke GmbH & Co. KG 2015-2025
Technical documentation 2508/09_GBen_00893191_948912651_9007200206785035 / Original DE

Table of contents

1	**About this document**	**4**
1.1	Symbols	4
1.2	Terms and abbreviations	5
1.3	Manufacturer	5
2	**Safety**	**6**
2.1	Intended use	6
2.2	Basic safety instructions	6
3	**Technical data**	**8**
3.1	Operating conditions	8
3.2	Standards and directives	8
3.3	Mechanical data	8
3.4	Pneumatic data	9
3.5	Type label	9
3.6	Electrical data	10
4	**Installation**	**11**
4.1	Safety instructions	11
4.2	Fluidic installation	11
4.3	Electrical installation	13
5	**Maintenance / troubleshooting**	**15**
5.1	Troubleshooting	15
6	**Spare parts**	**16**
7	**Logistics**	**17**
7.1	Transport and storage	17
7.2	Return	17
7.3	Disposal	17

MAN 1000339265 EN Version: E Status: RL (released | freigegeben) printed: 10.10.2026

valvesgo.com

valvesgo.com

1 About this document

The document is an important part of the product and guides the user to safe installation and operation. The information and instructions in this document are binding for the use of the product.

- Before using the product for the first time, read and observe the whole safety chapter.
- Before starting any work on the product, read and observe the respective sections of the document.
- Keep the document available for reference and give it to the next user.
- Contact the Bürkert sales office for any questions.

Further information concerning the product at Products.

- Enter the article number from the type label in the search bar.

The illustrations in these instructions may vary depending on the product variant.

1.1 Symbols

DANGER!

Warns of a danger that leads to death or serious injuries.

WARNING!

Warns of a danger that can lead to death or serious injuries.

CAUTION!

Warns of a danger that can lead to minor injuries.

NOTICE!

Warns of property damage on the product or the installation.

Indicates important additional information, tips and recommendations.

Refers to information in this document or in other documents.

- Indicates a step to be carried out.

✓ Indicates a result.

Menu Indicates a software user-interface text.

MAN 1000339265 EN Version: E Status: RL (released | freigegeben) printed: 10.10.2026

valvesgo.com

1.2 Terms and abbreviations

The terms and abbreviations are used in this document to refer to following definitions.

Product	Solenoid valve type 0127

1.3 Manufacturer

Bürkert Fluid Control Systems

Christian-Bürkert-Str. 13–17

74653 Ingelfingen

GERMANY

The contact addresses are available at Contact.

Need more information or additional products?

- Explore the full range of products on our eShop.

valvesgo.com

MAN 1000339265 EN Version: E Status: RL (released | freigegeben) printed: 10.10.2026

valvesgo.com

2 Safety

2.1 Intended use

The type 127 valve is designed as a rocker solenoid valve with a separating diaphragm.

It can be used as a media-separated small valve in laboratories as well as medical and analytical technology.

- When using the device, observe the authorised data, and the operating and usage conditions specified in the contract documents and in the operating instructions.
- Do not use the device outdoors.
- Use the device only in conjunction with third-party devices and components recommended or approved by Bürkert.
- The device must only be used when in perfect condition; always ensure proper storage, transportation, installation and operation.
- Use the device only as intended.

2.2 Basic safety instructions

These safety instructions do not make allowance for any unforeseen circumstances or incidents which may arise during installation, operation and maintenance.

Risk of injury from high pressure in the system/device

- Before working on the system or device, switch off the pressure and vent/empty the lines.

Risk of injury from electric shock

- Before working on the system or device, switch off the power supply and secure to prevent reactivation.
- Observe the applicable accident prevention and safety regulations for electrical devices.

Risk of burns or fire from hot device surfaces due to prolonged activation time.

- Keep the device away from highly flammable substances and media and do not touch with bare hands!

Medium may leak out if the diaphragm is worn

- Check regularly for any medium leakages.
- If the medium is hazardous, secure the environment against risks.

General dangerous situations

To prevent injuries, the following must be observed:

- Do not make any internal or external modifications to the device and do not subject it to mechanical stress.
- Secure the device against unintentional activation.
- Make sure only trained technicians carry out installation and maintenance work.
- The valves must be installed according to the regulations applicable in the country of use.

MAN 1000339265 EN Version: E Status: RL (released | freigegeben) printed: 10.10.2026

valvesgo.com

- After interruption the power supply, ensure that the process is restarted in a controlled manner.
- Comply with the generally accepted engineering standards.

Electrostatically sensitive components/assemblies

The device contains electronic components that are susceptible to the effects of electrostatic discharging (ESD). Components that come into contact with electrostatically charged persons or objects are at risk. In the worst-case scenario, they will be destroyed immediately or will fail after start-up.

- Observe the requirements for minimizing or avoiding the possibility of damage caused by sudden electrostatic discharge in accordance with EN 61340-5-1!
- Do not touch electronic components when the supply voltage is connected!

MAN 1000339265 EN Version: E Status: RL (released | freigegeben) printed: 10.10.2026

valvesgo.com

valvesgo.com

3 Technical data

3.1 Operating conditions

WARNING!

Risk of injury

Risk of malfunction when used outdoors!

- Do not use type 0127 outdoors and avoid heat sources that could cause the permissible temperature range to be exceeded.

Ambient temperature	max. +55°C
Storage temperature	–40...+65°C
Media	Neutral and aggressive liquids and gases that do not attack the housing and seal materials (see resistance table).
Degree of protection	IP65 with strands and individual device socket IP30 with multiple device socket

Medium temperature		
Nominal diameter	Seal material	Temperature range
Nominal diameter 0.8	FFKM	+5...+50°C
Nominal diameter 0.8	FKM	0...+50°C
Nominal diameter 0.8	EPDM	-5...+50°C
Nominal diameters 1.2 and 1.6	FFKM	+10°C...+50°C
Nominal diameters 1.2 and 1.6	FKM	+5...+50°C
Nominal diameters 1.2 and 1.6	EPDM	0...+50°C

3.2 Standards and directives

This product complies with the legal requirements applicable at the time of placing on the market and has been developed and tested in accordance with the relevant European directives/regulations and harmonized standards. The conformity is documented and, if necessary, supported by evidence. The EU Declaration of Conformity can be found behind the respective type on the home page country.burkert.com

3.3 Mechanical data

Dimensions	see data sheet
Housing material	PVDF, ETFE, PEEK, PPS
Seal material	FFKM, FKM,EPDM

MAN 1000339265 EN Version: E Status: RL (released | freigegeben) printed: 10.10.2026

valvesgo.com

valvesgo.com

3.4 Pneumatic data

A	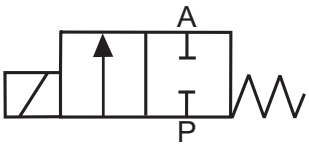	2/2-way valve, direct-acting, normally closed
B	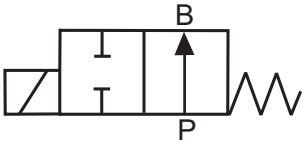	2/2-way valve, direct-acting, normally open
T	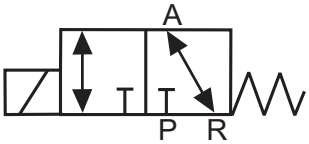	3/2-way valve, direct-acting, can be used universally

Tab. 1: Circuit functions

Pressure range	see Type label [▶ 9]
Port connections	Threaded connection G1/8, NPT1/8 or UNF1/4-28 Flange connection Hose connection

Observe the data for voltage, current type and pressure listed on the type label.

3.5 Type label

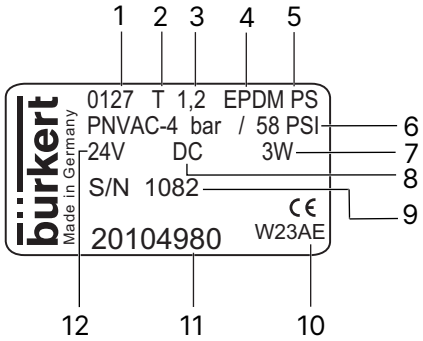

Fig. 1: Example

1	Type	2	Circuit function
3	Orifice	4	Sealing material
5	Body material	6	PN
7	Power	8	Frequency
9	Serial number	10	Manufacture code
11	Article number	12	Voltage

MAN 1000339265 EN Version: E Status: RL (released | freigegeben) printed: 10.10.2026

valvesgo.com

3.6 Electrical data

Operating voltage	12 V DC 24 V DC 24 V UC
Voltage tolerance	±10%
Nominal power 12-24 W	3.0 W
Nominal operating mode	Continuous operation, duty cycle 100%
	for block installation if media or environment temperatures exceed +40°C: intermittent operation 40% (10 min)

Observe the data for voltage, current type and pressure listed on the type label.

valvesgo.com

MAN 1000339265 EN Version: E Status: RL (released | freigegeben) printed: 10.10.2026

4 Installation

4.1 Safety instructions

WARNING!

Risk of injury when installing the valve

- Maintenance must always be carried out by qualified and skilled staff and with the appropriate tools.
- After an interruption in the power or pneumatic supply, ensure that the process is restarted in a defined or controlled manner.

4.2 Fluidic installation

DANGER!

Danger – high pressure

Acute risk of injury when working on the system.

- Before loosening the lines and valves, turn off the pressure and vent the lines.

Installation position: any, but preferably with actuator facing up.

Installation

- Clean any contamination from the pipelines and flange connections prior to installation.
- If necessary, install a dirt trap to protect against malfunctions.
  Mesh size: 5 µm

Observe the valve's flow direction.

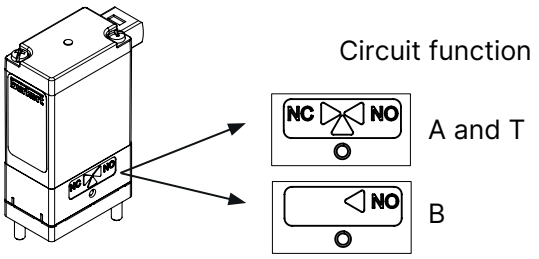

NC (normally closed)	Normally closed port for CFA
IN/OUT	for pressure port (distributor) or working port (mixer), at CFT
NO (normally open)	Normally open port for CFB

Tab. 2: Marking of valve connections on the body:

The valve body must not be distorted by the fastening screws or by excessive tightening of the connection nipples.

MAN 1000339265 EN Version: E Status: RL (released | freigegeben) printed: 10.10.2026

valvesgo.com

The bodies with threaded or hose connections have fixing eyelets for threaded connection from above with M3 screws or from below with tapping screws BZ 3.9 x...DIN 7971.

Body with threaded connection:

- Use PTFE tape as seal material.
- Only screw in the connection threads by hand.

Body with hose connection:

- Flexible hose (e.g. silicone) with an internal diameter of 1.6-2 mm

Housing with flange connection:

- Remove the cover plate (coloured orange).

Do not remove the flange plate.

WARNING!

Danger due to escaping medium

Leaking connections if the seals are not fitted precisely, if the manifold is uneven or if the surface quality of the manifold is inadequate.

- Ensure that the seals provided are properly seated inside the valve.
- Ensure that the manifold is flat.
- Ensure that the manifold's surface quality is adequate.

- Place the seal in the valve.

CAUTION!

Excessive tightening torque can damage the device.

- Observe the screws' maximum tightening torque.

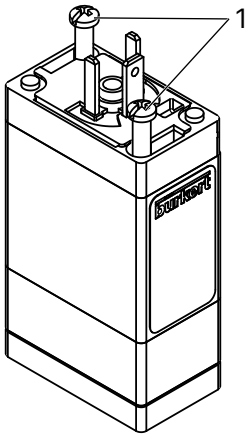

1 Tightening torque 0.3 ± 0.05 Nm (does not apply to self-tapping screws)

- Secure the valve to the manifold.

MAN 1000339265 EN Version: E Status: RL (released | freigegeben) printed: 10.10.2026

valvesgo.com

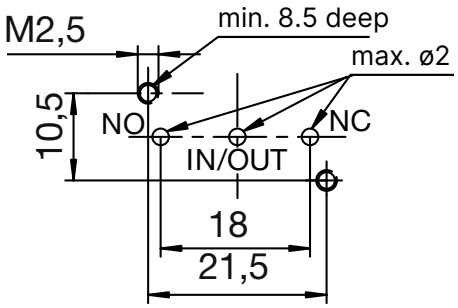

Fig. 2: Dimension drawing for manifold

3-way	2-way outlet in centre	2-way outlet, external
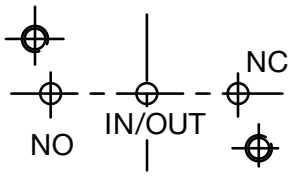	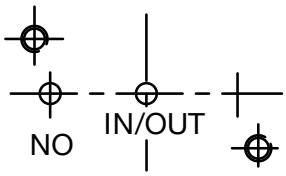	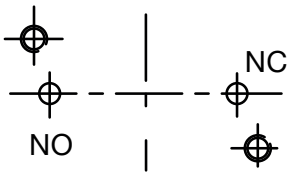

Tab. 3: Arrangement of the holes

4.3 Electrical installation

DANGER!

Danger from electrical voltage when working on the system

- Before starting work, always switch off the power supply and secure it against being switched back on.
- Observe the applicable accident prevention and safety regulations for electrical devices.

Observe the voltage and current type according to the type label.
Voltage tolerance ±10%.

Connection with socket:

DANGER!

Danger due to electrical voltage when protective conductor is not connected

- Always connect the protective conductor.

Earth connection (if available): Middle plug contact

For electrical connection with socket, ensure that the flat seal is seated correctly.

CAUTION!

Excessive tightening torque can damage the device.

- Observe the screw's max. tightening torque.

MAN 1000339265 EN Version: E Status: RL (released | freigegeben) printed: 10.10.2026

valvesgo.com

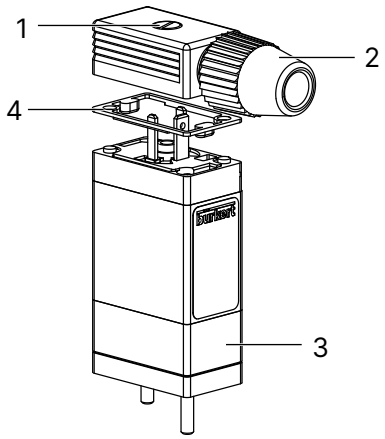

1	Max. tightening torque: 0.4 Nm	2	Cable plug type 1054
3	Valve	4	Flat seal

- Screw the socket with valve with a max. tightening torque of 0.4 Nm.

Alternative electrical connection:

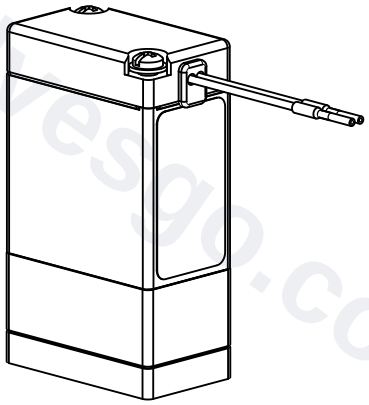

Fig. 3: Two single strands

valvesgo.com

MAN 1000339265 EN Version: E Status: RL (released | freigegeben) printed: 10.10.2026

5 Maintenance / troubleshooting

- Check regularly for any medium leakages.

5.1 Troubleshooting

If faults occur, check:

- the port connections
- the operating pressure
- the power supply and valve control unit

If the valve still does not actuate, contact your local Bürkert Service representative.

MAN 1000339265 EN Version: E Status: RL (released | freigegeben) printed: 10.10.2026

valvesgo.com

valvesgo.com

6 Spare parts

CAUTION!

Danger due to incorrect accessories and spare parts

Incorrect accessories or spare parts may cause injuries and damage the device and the surrounding area.

- Use only original accessories and original spare parts from Bürkert.

Accessories and spare parts available on request.

valvesgo.com

MAN 1000339265 EN Version: E Status: RL (released | freigegeben) printed: 10.10.2026

7 Logistics

7.1 Transport and storage

- Protect the device against moisture and dirt in the original packaging during transportation and storage.
- Avoid UV radiation and direct sunlight.
- Protect connections from damage with protective caps.
- Observe permitted storage temperature.

7.2 Return

No work or tests will be carried out on the device until a valid Contamination Declaration has been received.

- To return a used device to Bürkert, contact the Bürkert sales office. A return number is required.

7.3 Disposal

Environmentally friendly disposal

- Follow national regulations regarding disposal and the environment.
- Collect electrical and electronic devices separately and dispose of them as special waste.

Further information at country.burkert.com

MAN 1000339265 EN Version: E Status: RL (released | freigegeben) printed: 10.10.2026

valvesgo.com