bürkert
FLUID CONTROL SYSTEMS

Mass flow controller (MFC)/mass flow meter (MFM) for gases

- Nominal flow range from 20 lN/min to 2500 lN/min (re. nitrogen)
- High accuracy and repeatability
- Communication via standard signals or Industrial Ethernet
- Electromagnetic and electromotoric valve actuation available
- Easy device exchange due to configuration memory

Product variants described in the data sheet may differ from the product presentation and description.

Can be combined with

Type 6013
Plunger valve 2/2-way direct-acting

Type 0330
Direct-acting 2/2 or 3/2-way pivoted armature valve

Type description

The mass flow controller (MFC)/mass flowmeter (MFM) type 8745 is suitable for controlling the mass flow of large gas quantities. Type 8745 can be configured as MFM or MFC according to demand. Optionally, up to four calibration curves can be stored in the device. The thermal inline sensor located directly in the main gas stream achieves very fast response times with minimal pressure loss. As the actuator, a Bürkert direct-acting proportional valve guarantees high response sensitivity. As an MFC, type 8745 is available in two variants: with electromagnetic proportional valve and with electromechanical proportional valve. In addition to an analogue and an industrial ethernet variant, a Modbus RTU variant is also available.

DTS 1000338235 EN Version: W Status: RL (released | freigegeben | valide) printed: 16.12.2025

© Christian Bürkert GmbH & Co. KG, Subject to alteration

valvesgo.com

Table of contents

1. General technical data 4

1.1. General 4
1.2. Variant with electromagnetic proportional valve 5
1.3. Variant with electromotive proportional valve 5

2. Approvals and conformities 6

2.1. General notes 6
2.2. Conformity 6
2.3. Standards 6
2.4. North America (USA/Canada) 6
2.5. Foods and beverages/Hygiene 6
2.6. Oxygen 7

3. Materials 7

3.1. Bürkert resistApp 7

4. Dimensions 7

4.1. Threaded variant connections 7
Small nominal flow rates, with internal thread 7
Small nominal flow rates, with clamp connection DN 20...¾" 8
Large nominal flow rates, with internal thread 8
Large nominal flow rates, with clamp connection DN 40...1½" 9
4.2. Variant with electromagnetic proportional valve 9
MFC with valve Type 2873 9
MFC with valve Type 2875 10
MFC with valve Type 2836 11
4.3. Variant with electromotive proportional valve 14
MFC with valve Type 3280 14
MFC with valve Type 3285 (DN 12 and DN 15) 16
MFC with valve Type 3285 (DN 20 and DN 25) 17
4.4. MFM variant 18
Variant with base block 00 or A1 for small nominal flow rates 18
Variant with base block A2 for large nominal flow rates 18
Variant with base block A3 for very large nominal flow rates 19

5. Product connections 20

5.1. Communication 20
Industrial Ethernet 20
Analogue 20
Modbus RTU 21

6. Performance specifications 22

6.1. MFM pressure loss diagram 22
6.2. Nominal flow rate of typical gases 22
6.3. Derating diagram for electromotive variants 23

7. Product operation 23

7.1. Measurement principle 23

8. Product accessories 24

8.1. Bürkert Communicator software 24
8.2. Connecting Type 8745 with the Bürkert Communicator software 25
8.3. Configuration management for easy device replacement 25

DTS 1000338235 EN Version: W Status: RL (released | freigegeben | valide) printed: 16.12.2025

valvesgo.com

8.4. Web server for Industrial Ethernet variant 25

9. Ordering information 25

9.1. Bürkert eShop 25
9.2. Recommendation regarding product selection 25
9.3. Bürkert product filter 26
9.4. Bürkert Product Enquiry Form 26
9.5. Ordering chart accessories 26

DTS 1000338235 EN Version: W Status: RL (released | freigegeben | valide) printed: 16.12.2025

valvesgo.com

valvesgo.com

1. General technical data

1.1. General

Product properties	
Dimensions	Further information can be found in chapter "4. Dimensions" on page 7.
Material	
Seal	FKM or EPDM (depending on gas) [1.)]
Housing	PC (polycarbonate)
Base block	Aluminium or stainless steel 1.4404/316L
Wetted parts (sensor)	Stainless steel 1.4404/316L, Al_2O_3, PPS GF40, epoxy resin, silicon, silicon nitride
Configuration management	Further information can be found in chapter "8.3. Configuration management for easy device replacement" on page 25.
Electrical data	
Operating voltage	24 V DC
Residual ripple	± 2 %
Voltage tolerance	± 10 %
Electrical connection	
Analogue variant	D-Sub plug, 9-pin [2.)] or terminal strip, 6-pin
Industrial Ethernet variant	2 x RJ45 socket (Switch) [3.)]
Modbus RTU variant	D-Sub plug, 9-pin
Medium data	
Operating medium	Neutral, pure gases (others on request) Further information can be found in chapter "6.2. Nominal flow rate of typical gases" on page 22.
Calibration medium	Operating medium or air
Medium temperature	- 10 °C [4.)]...+ 70 °C (- 10 °C [4.)]...+ 60 °C with oxygen)
Product connections	
Analogue interface	4...20 mA, 0...20 mA, 0...10 V or 0...5 V Input impedance: > 20 kΩ (voltage) or < 300 Ω (current) Maximum current: 10 mA (voltage output) Maximum load: 400 Ω (current output)
Digital communication interface	Modbus RS-485/RTU list 0 and list 1, Industrial Ethernet: EtherCAT®, EtherNet/IP, Modbus TCP, PROFINET
Port connection	G ¼", NPT ¼, ⅜, ½, ¾, 1, sub-base, clamp connection
Approvals and conformities	
North America (USA/Canada)	Further information can be found in chapter "2.4. North America (USA/Canada)" on page 6.
Foods and Beverages/Hygiene	Further information can be found in chapter "2.5. Foods and beverages/Hygiene" on page 6.
Oxygen	Further information can be found in chapter "2.6. Oxygen" on page 7.
Environment and installation	
Installation position	Horizontal or vertical
Storage temperature	- 10 °C...+ 70 °C
Relative air humidity	Max. 95 % at + 55 °C, non-condensing
Degree of protection	IP20
Ambient temperature	- 10 °C...+ 50 °C (higher temperatures on request)
Accessories	
Software	Bürkert Communicator Further information can be found in chapter "8.1. Bürkert Communicator software" on page 24.

1.) When using the electromotive proportional valve, the device additionally includes:
- Type 3280 DN 4: PEEK valve seat seal
- Type 3285: Al_2O_3 valve seat seal

2.) An additional digital input and a relay output are available for the analogue variant with D-Sub plug, 9-pin.

3.) Supply voltage via separate terminal strip

4.) When using an electromotive proportional valve, the minimum medium temperature is 0 °C.

DTS 1000338235 EN Version: W Status: RL (released | freigegeben | valide) printed: 16.12.2025

valvesgo.com

1.2. Variant with electromagnetic proportional valve

Type 8745 can be configured as MFM or MFC as required. The MFC variant uses direct-acting proportional valves of the 287x series. These electromagnetic proportional valves are normally closed and stand for highest measuring accuracy and repeatability with settling times resp. response times of a few hundred milliseconds.

Product properties	
Dimensions	Further information can be found in chapter **"1.2. Variant with electromagnetic proportional valve" on page 5**.
Total weight	Approx. 1800 g (aluminium, 16 W valve) Approx. 3100 g (stainless steel 1.4404/316L, 16 W valve)
LED display [1.)]	RGB-LED based on NAMUR NE107
Actuator (proportional valve)	
Valve position	Normally closed
Nominal diameter	0.8...12 mm
K_{VS} value range	0.02...2.5 m^3/h
Performance data	
Nominal flow range (Q_N) [2.)]	MFC: 20...1500 l_N/min (N_2) [2.)] MFMs ≤ 2500 l_N/min (N_2) [2.)]
Operating pressure [3.)]	MFM: max. 25 bar MFC: max. 25 bar (the maximum operating pressure depends on medium and nominal valve size)
Measuring accuracy [4.)]	± 1.5 % MV [4.)] ± 0.3 % FS [5.)] (under calibration conditions and after < 1 min warm-up time to achieve the best measuring conditions)
Repeatability	± 0.1 % FS
Turndown ratio	1:50
Settling time (MFC)/Response time (MFM) (t95)	< 500 ms
Electrical data	
Power consumption [6.)]	Max. 4 W (as MFM) Max. 12.5...31.5 W (as MFC, depending on proportional valve type)

1.) For a detailed description of LED colours see **operating instructions Type 8745** ▶
2.) Index N: flow rates with respect to 1.013 bar abs and 0 °C
3.) Overpressure to atmospheric pressure
4.) If the operating medium differs from the calibration medium, the actual measuring accuracy may deviate from the specified value. If natural gas is used as the operating medium, the measuring accuracy depends on the composition of the natural gas, which can vary depending on origin and season.
5.) Of measured value
6.) Of full scale
7.) Information based on the typical power consumption (at + 23 °C ambient temperature, nominal flow rate and 30 min closed-loop control mode). The specifications according to UL 61010 - 1 may deviate (see **operating instructions Type 8745** ▶).

1.3. Variant with electromotive proportional valve

Type 8745 with electromotive proportional valve is especially suitable for applications with high inlet pressures of up to 22 bar or high flow rates (at a low pressure drop). The motor's power consumption to hold a specific opening position is nearly zero. This key feature can reduce the energy consumption of a plant dramatically. Without electrical power the valve remains in its current position.
The maximum duty cycle of the motor depends on the ambient temperature. The duty cycle does not refer to the duty cycle of the device but to the duty cycle of the motor. The motor is not switched on unless the valve is to move. Frequent set-point value input changes will drastically increase the motor's duty cycle. Further information about the derating curve can be found in chapter **"6.3. Derating diagram for electromotive variants" on page 23**.

Product properties	
Dimensions	Further information can be found in chapter **"1.3. Variant with electromotive proportional valve" on page 5**.
Total weight	Approx. 1670 g (aluminium, valve Type 3280) Approx. 2940 g (stainless steel 1.4404/316L, valve Type 3280)
LED display [1.)]	With MFM: RGB LED according to NAMUR NE107 With valve: RGB LED to indicate valve opening
Actuator (proportional valve)	
Valve position	Normally closed
Nominal diameter	2...20 mm
K_{VS} value range	0.5...7.8 m^3/h

DTS 1000338235 EN Version: W Status: RL (released | freigegeben | valide) printed: 16.12.2025

valvesgo.com

Performance data	
Nominal flow range (Q_N) 2.)	20...2500 l_N/min (N_2) 2.)
Operating pressure 3.)	MFM: max. 22 bar For MFCs, the maximum operating pressure depends on the medium and nominal valve size
Measuring accuracy 4.)	± 2 % MV 5.) ± 0.5 % FS 6.) (under calibration conditions and after < 1 min warm-up time to achieve the best measuring conditions)
Repeatability	± 0.5 % FS
Turndown ratio	1:50
Settling time (MFC)/Response time (MFM) (t95)	< 5 s
Electrical data	
Power consumption 7.)	Max. 4 W (as MFM) Max. 12 W (as MFC)

1.) For a detailed description of LED colours see **operating instructions Type 8745** ▸
2.) Index N: flow rates with respect to 1.013 bar abs and 0 °C
3.) Overpressure to atmospheric pressure
4.) If the operating medium differs from the calibration medium, the actual measuring accuracy may deviate from the specified value. If natural gas is used as the operating medium, the measuring accuracy depends on the composition of the natural gas, which can vary depending on origin and season.
5.) Of measured value
6.) Of full scale
7.) Data during the movement of the electromotive proportional valve. Valve holding power is < 1 W.

valvesgo.com

2. Approvals and conformities

2.1. General notes

- The approvals and conformities listed below must be stated when making enquiries. This is the only way to ensure that the product complies with all required specifications.
- Not all available variants can be supplied with the below mentioned approvals or conformities.

2.2. Conformity

In accordance with the Declaration of Conformity, the product is compliant with the EU Directives.

2.3. Standards

The applied standards which are used to demonstrate compliance with the EU Directives are listed in the EU-Type Examination Certificate and/or the EU Declaration of Conformity.

2.4. North America (USA/Canada)

Approval	Description
c UL us LISTED	**Optional: UL Listed for the USA and Canada** The products are UL Listed for the USA and Canada according to: • UL 61010-1 (ELECTRICAL EQUIPMENT FOR MEASUREMENT, CONTROL, AND LABORATORY USE – Part 1: General Requirements) • CAN/CSA-C22.2 No. 61010-1

2.5. Foods and beverages/Hygiene

Conformity	Description
FDA	**FDA – Code of Federal Regulations (valid for variable code PL02, PL03)** All wetted materials are compliant with the Code of Federal Regulations published by the FDA (Food and Drug Administration, USA) according to the manufacturer's declaration.

DTS 1000338235 EN Version: W Status: RL (released | freigegeben | valide) printed: 16.12.2025

valvesgo.com

USP	**United States Pharmacopeial Convention (USP) (valid for variable code PL04)** All wetted materials are biocompatible according to the manufacturer's declaration.
	EC Regulation 1935/2004 of the European Parliament and of the Council (valid for variable code PL01, PL02) All wetted materials are compliant with EC Regulation 1935/2004/EC according to the manufacturer's declaration.

2.6. Oxygen

Conformity	Description
O_2	**Optional: Suitability for oxygen (valid for the variable code NL02)** The products are suitable for use with gaseous oxygen, according to the manufacturer's declaration.

3. Materials

3.1. Bürkert resistApp

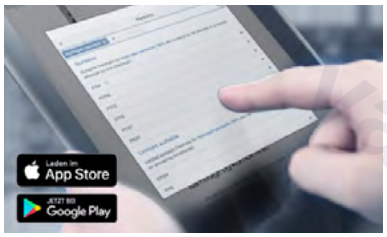

Bürkert resistApp – Chemical Resistance Chart

You want to ensure the reliability and durability of the materials in your individual application case? Verify your combination of media and materials on our website or in our resistApp.

Start chemical resistance chart

4. Dimensions

4.1. Threaded variant connections

Small nominal flow rates, with internal thread

Dimensions	Thread (A)	Thread depth [mm]
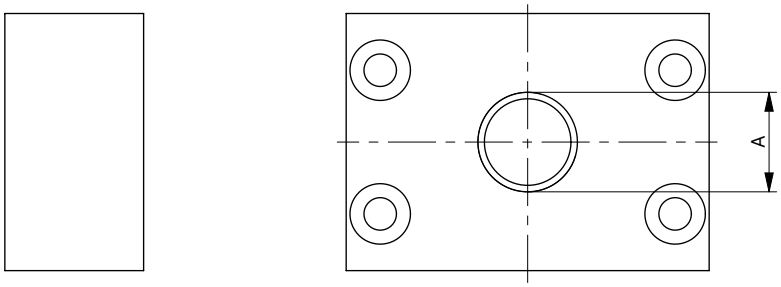	G ¼	12
	NPT ¼	11
	G ⅜	12
	NPT ⅜	11
	G ½	15
	NPT ½	14
	G ¾	16
	NPT ¾	15

DTS 1000338235 EN Version: W Status: RL (released | freigegeben | valide) printed: 16.12.2025

valvesgo.com

Small nominal flow rates, with clamp connection DN 20...¾"

Note:
Dimensions in mm

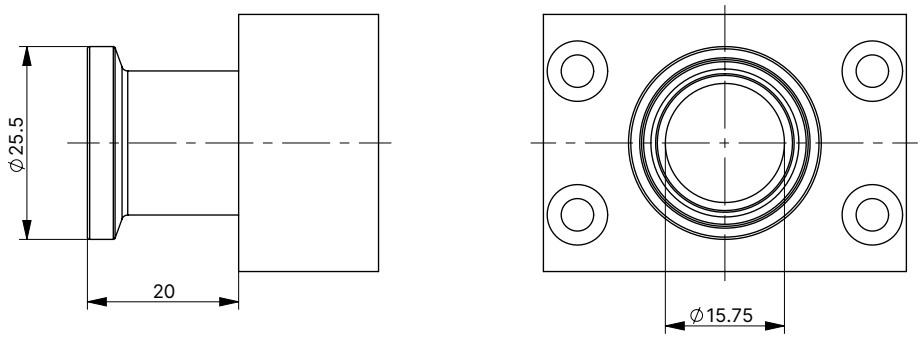

Large nominal flow rates, with internal thread

Dimensions	Thread (A)	Thread depth [mm]
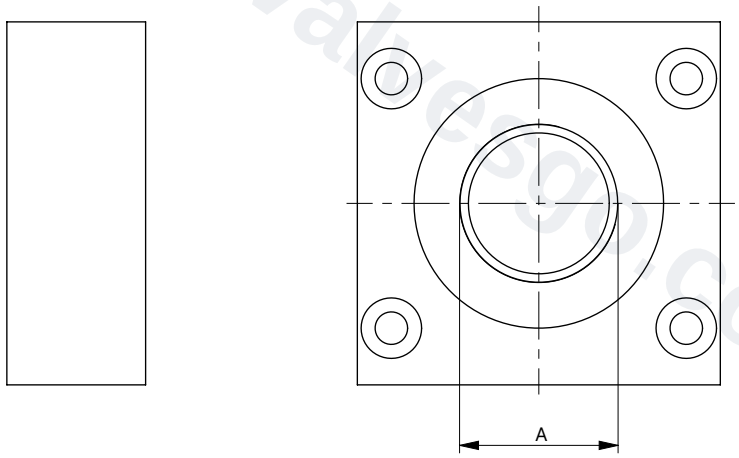	G ½	15
	NPT ½	14
	G ¾	16
	NPT ¾	15
	G 1	18
	NPT 1	16.8

valvesgo.com

DTS 1000338235 EN Version: W Status: RL (released | freigegeben | valide) printed: 16.12.2025

valvesgo.com

Large nominal flow rates, with clamp connection DN 40...1½"

Note:
Dimensions in mm

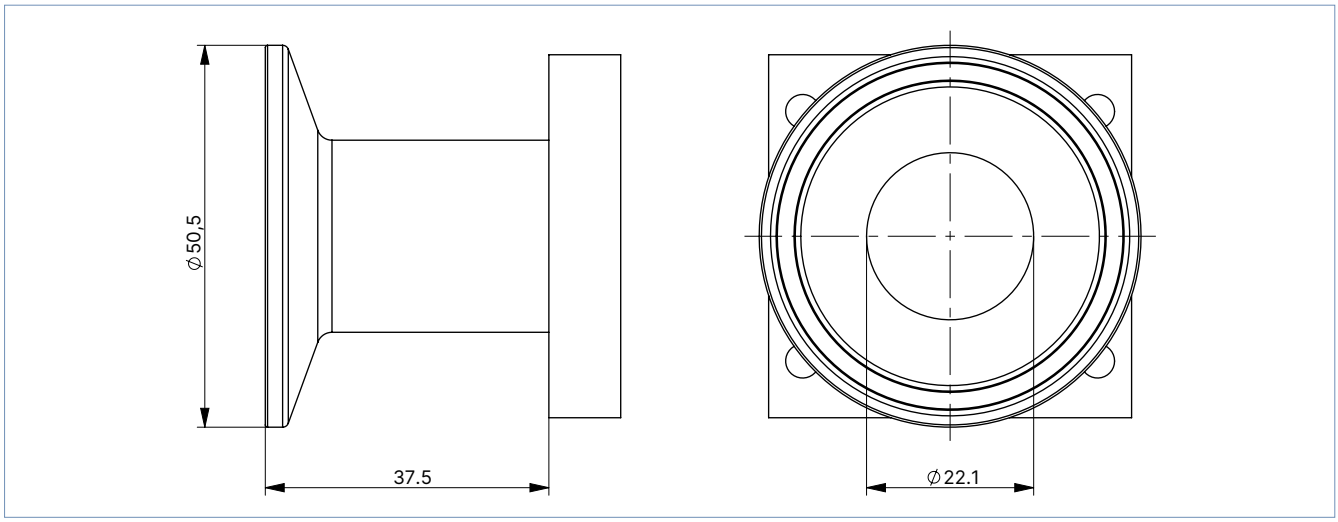

4.2. Variant with electromagnetic proportional valve

MFC with valve Type 2873

Variant with base block 00 or A1 for small nominal flow rates

Note:
Dimensions in mm

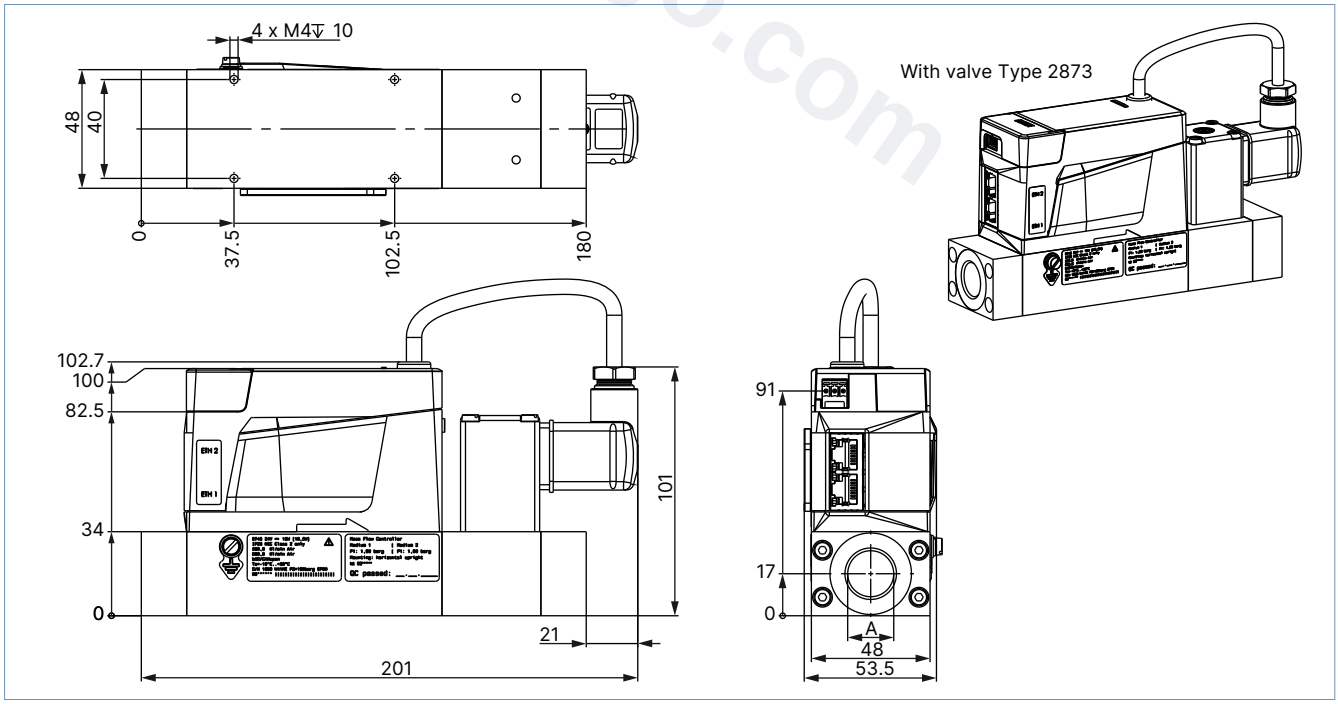

DTS 1000338235 EN Version: W Status: RL (released | freigegeben | valide) printed: 16.12.2025

valvesgo.com

MFC with valve Type 2875

Variant with base block 00 or A1 for small nominal flow rates

Note:
Dimensions in mm

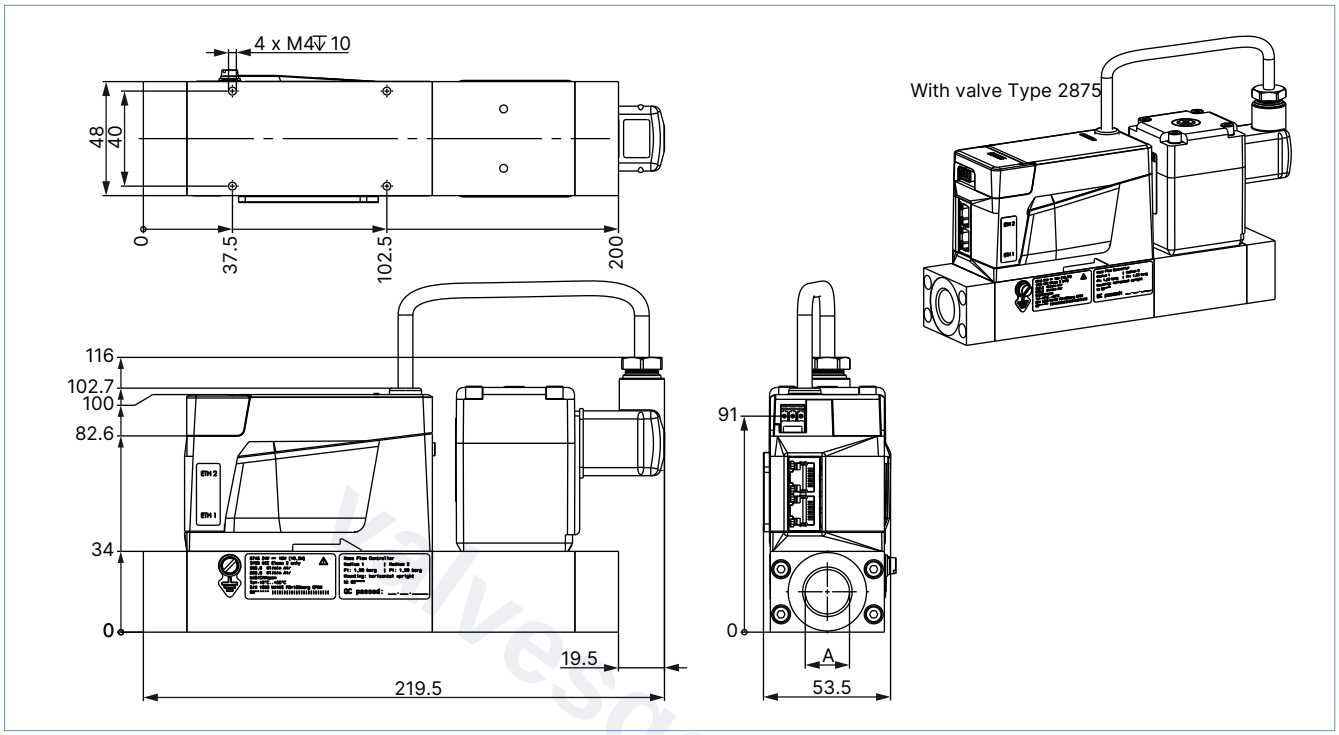

DTS 1000338235 EN Version: W Status: RL (released | freigegeben | valide) printed: 16.12.2025

valvesgo.com

MFC with valve Type 2836

Variant with base block 00 or A1 for small nominal flow rates

Note:
Dimensions in mm

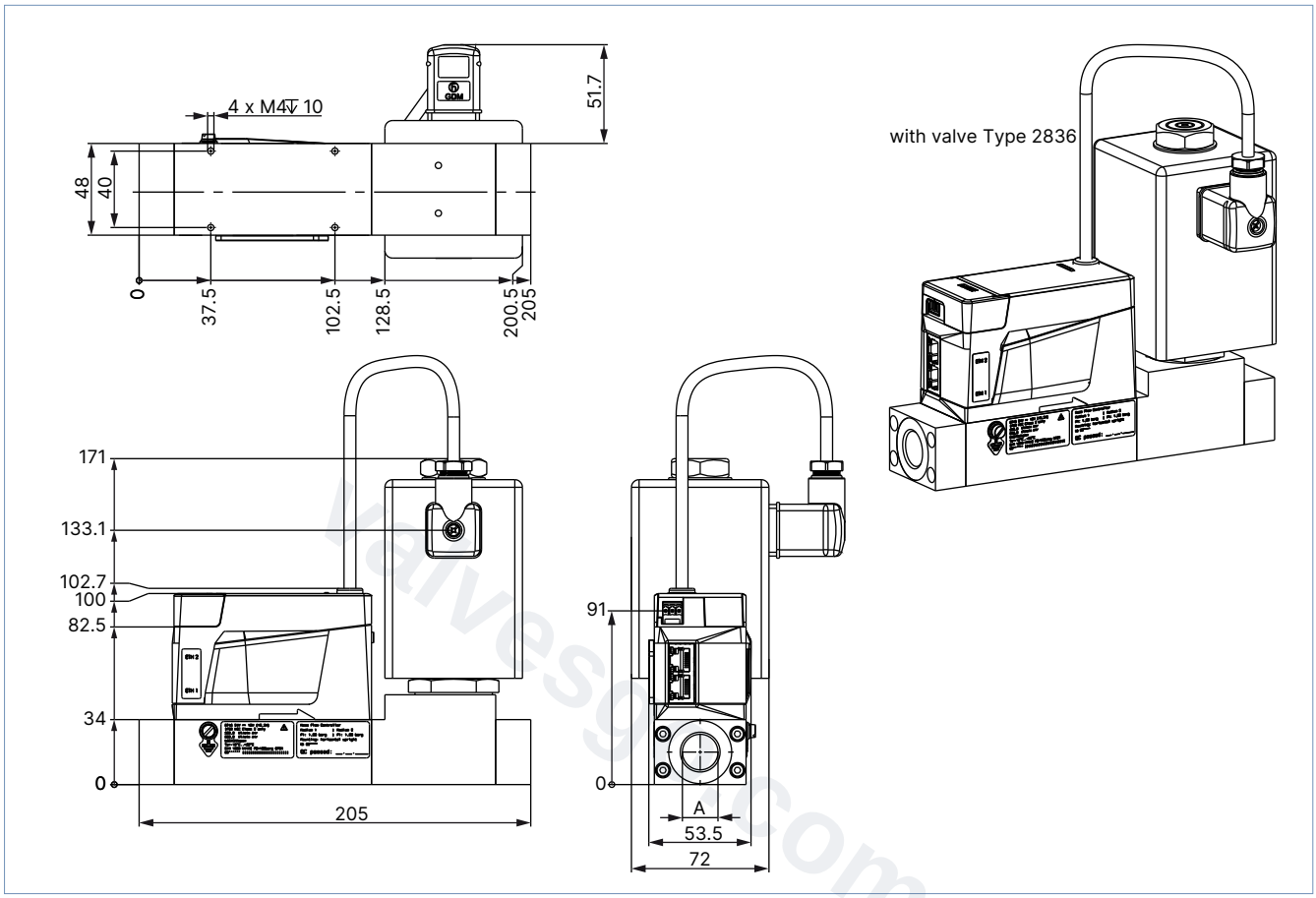

DTS 1000338235 EN Version: W Status: RL (released | freigegeben | valide) printed: 16.12.2025

valvesgo.com

Variant with base block A2 for large nominal flow rates

Note:
Dimensions in mm

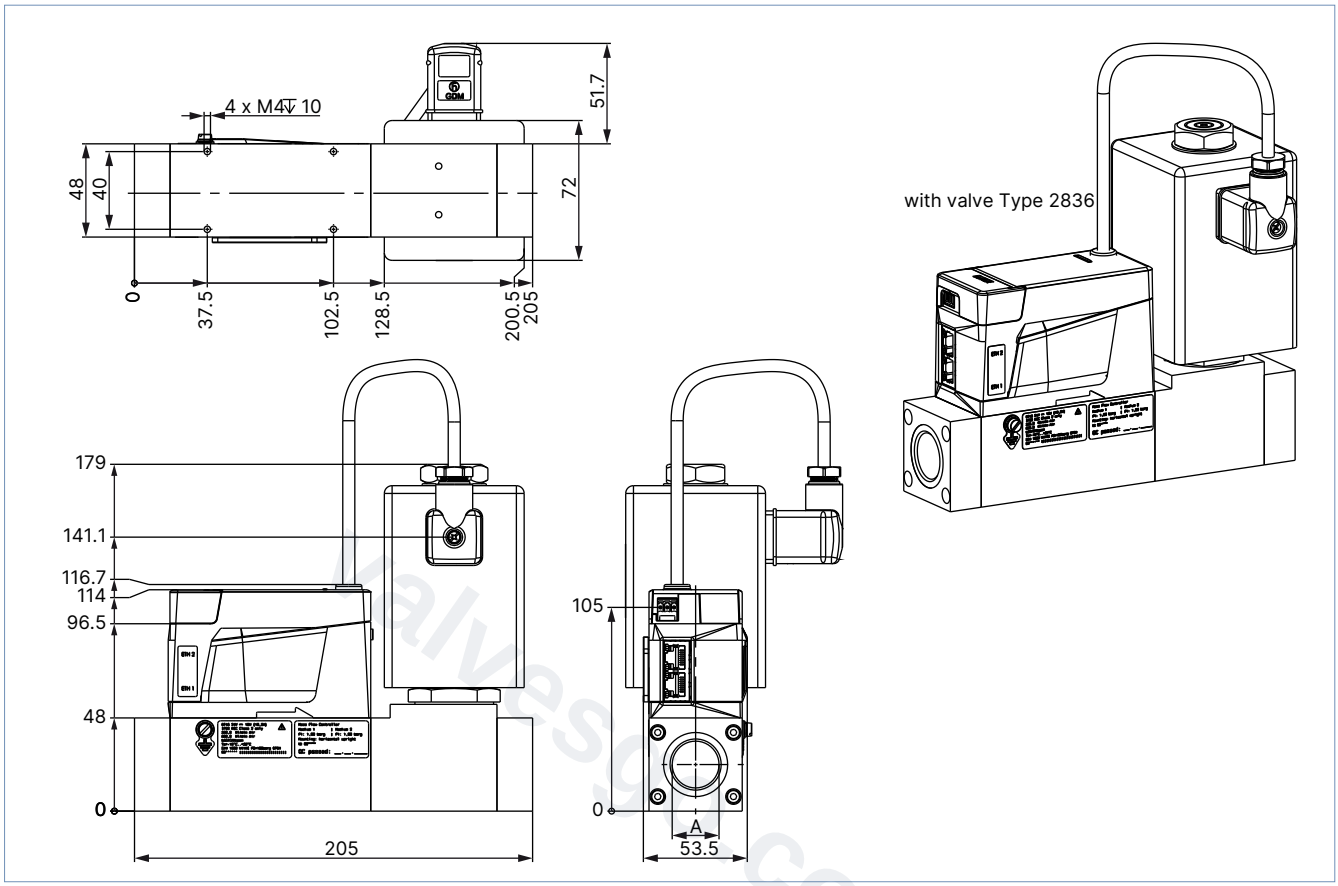

DTS 1000338235 EN Version: W Status: RL (released | freigegeben | valide) printed: 16.12.2025

valvesgo.com

Variant with base block A3 for very large nominal flow rates

Note:

- From a nominal flow rate Q_N > 1500 l/min onwards, the overall length increases by 30 mm.
- Dimensions in mm

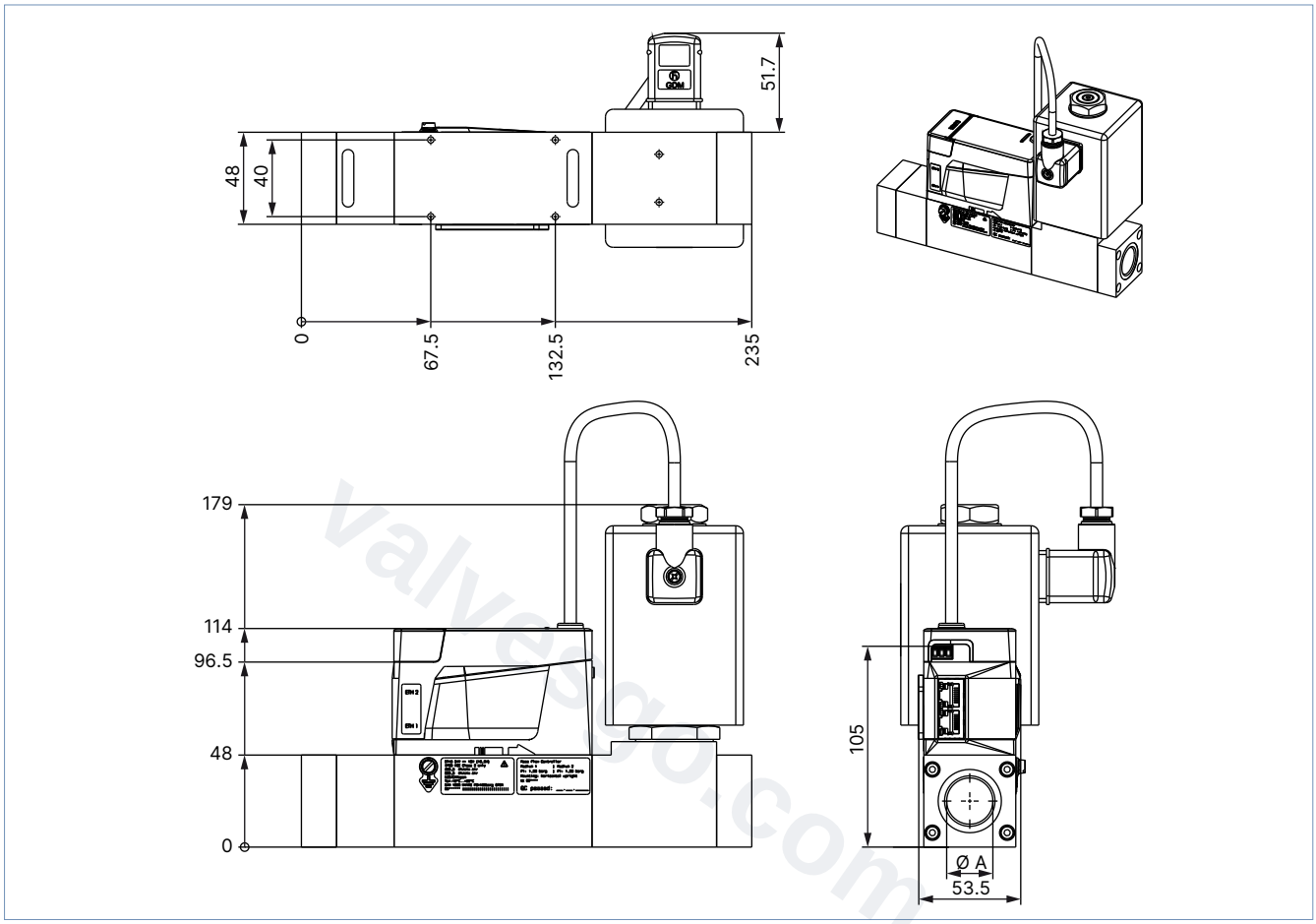

DTS 1000338235 EN Version: W Status: RL (released | freigegeben | valide) printed: 16.12.2025

valvesgo.com

4.3. Variant with electromotive proportional valve

MFC with valve Type 3280

Variant with base block 00 or A1 for small nominal flow rates

Note:
Dimensions in mm

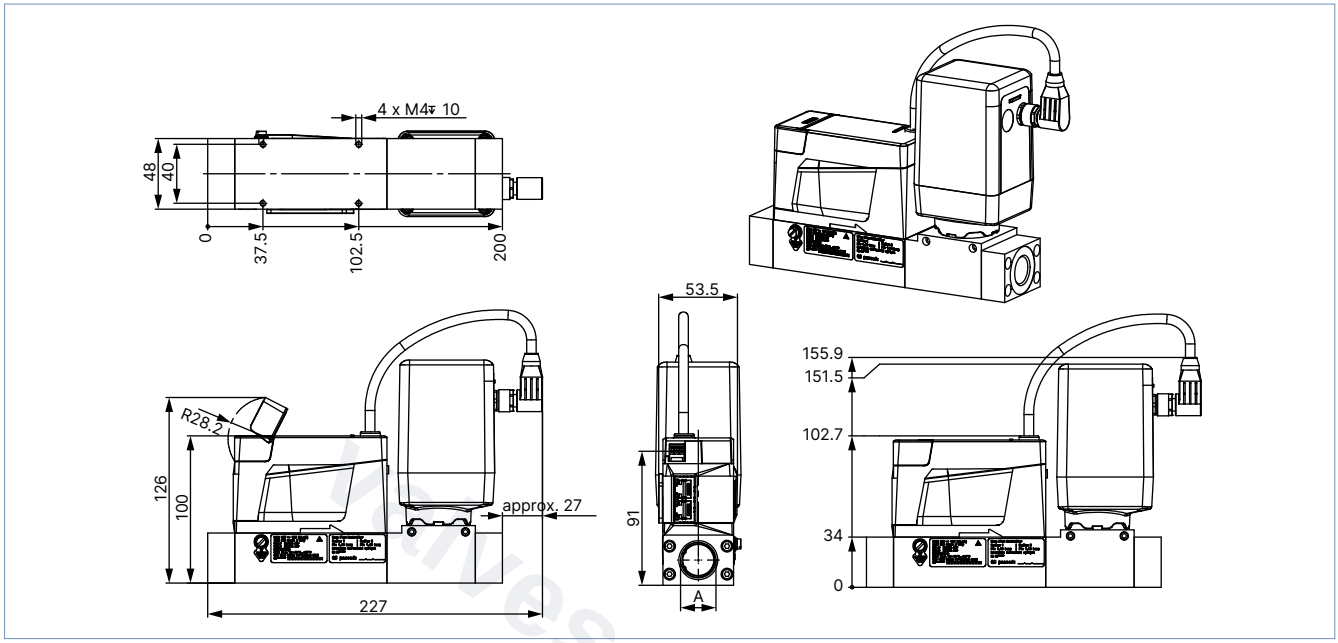

Variant with base block A2 for large nominal flow rates

Note:
Dimensions in mm

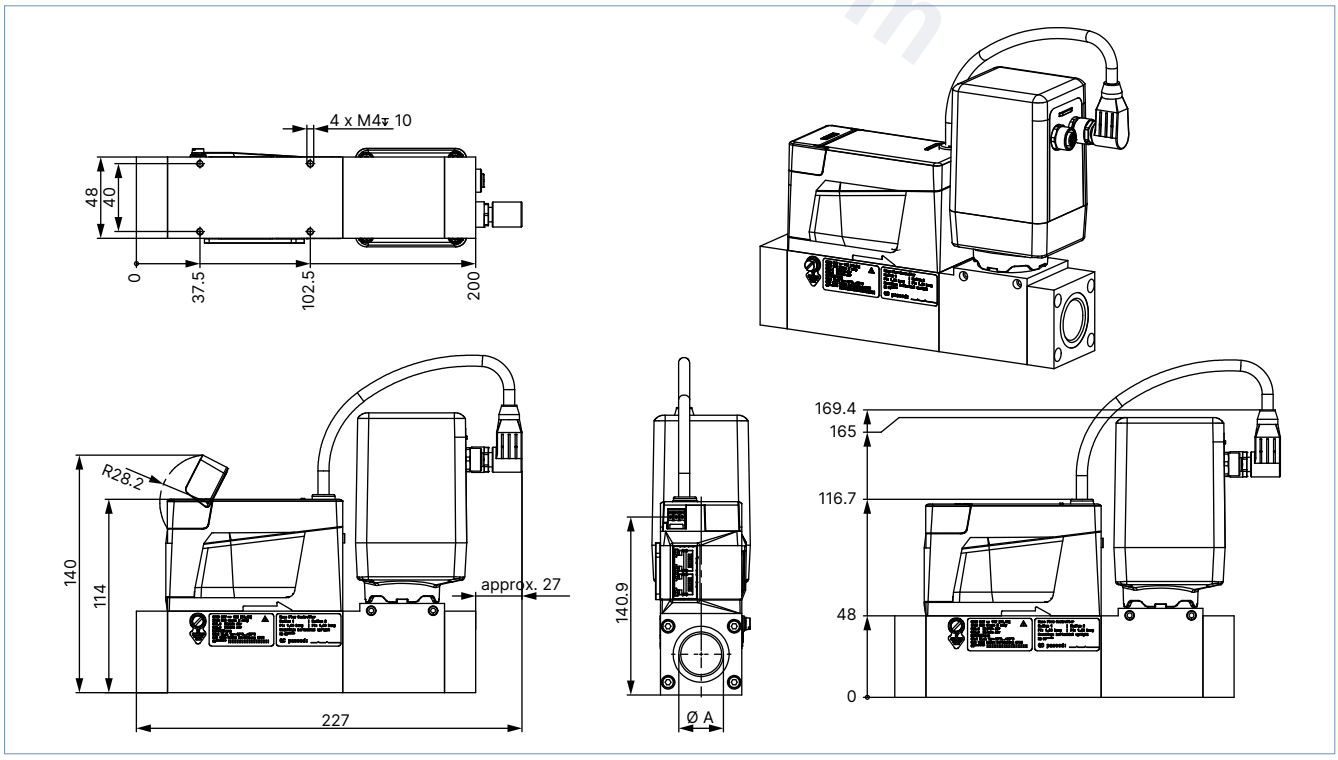

DTS 1000338235 EN Version: W Status: RL (released | freigegeben | valide) printed: 16.12.2025

valvesgo.com

Variant with base block A3 for very large nominal flow rates

Note:

- From a nominal flow rate Q_N > 1500 l/min onwards, the overall length increases by 30 mm.
- Dimensions in mm

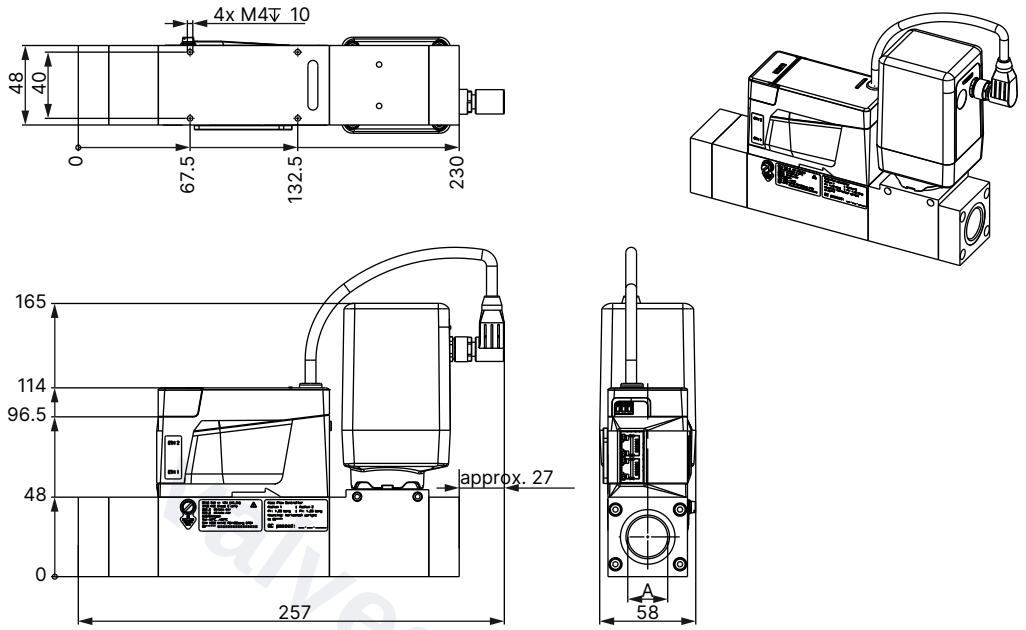

DTS 1000338235 EN Version: W Status: RL (released | freigegeben | valide) printed: 16.12.2025

valvesgo.com

MFC with valve Type 3285 (DN 12 and DN 15)

Variant with base block A2 for large nominal flow rates

Note:
Dimensions in mm

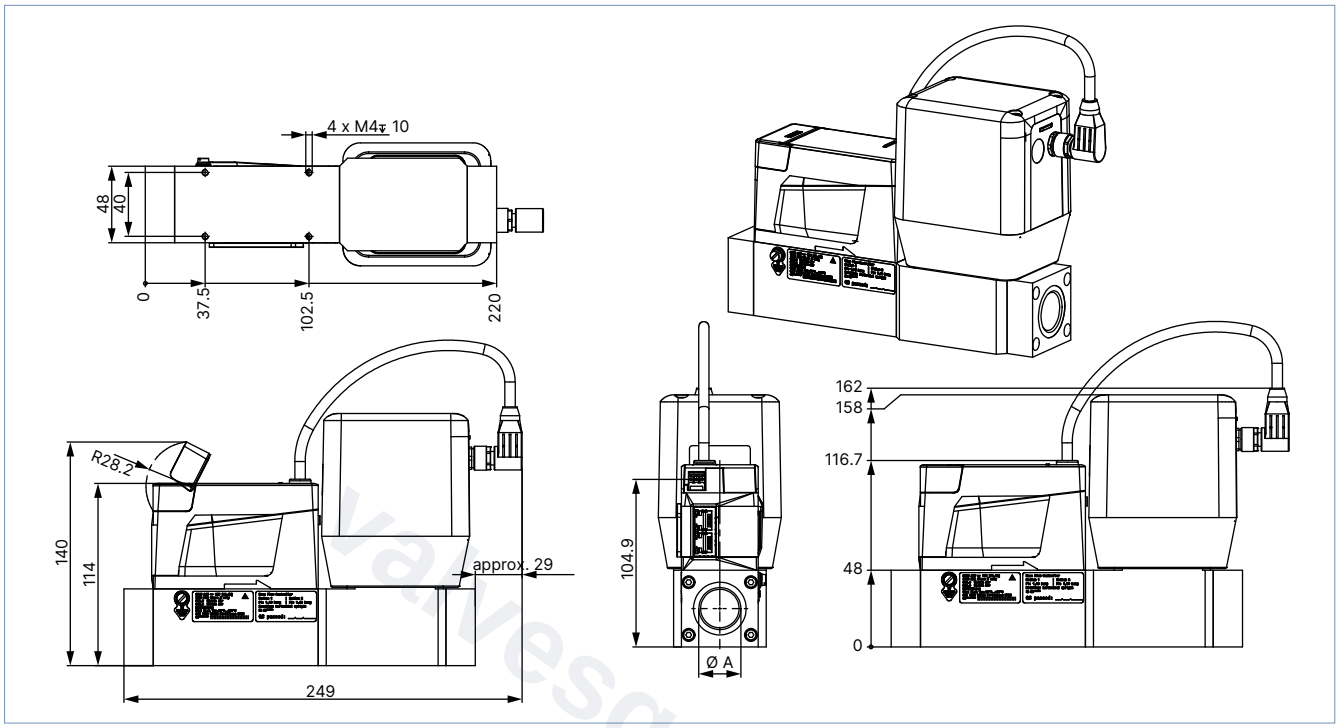

Variant with base block A3 for very large nominal flow rates

Note:
- From a nominal flow rate Q_N > 1500 l/min onwards, the overall length increases by 30 mm.
- Dimensions in mm

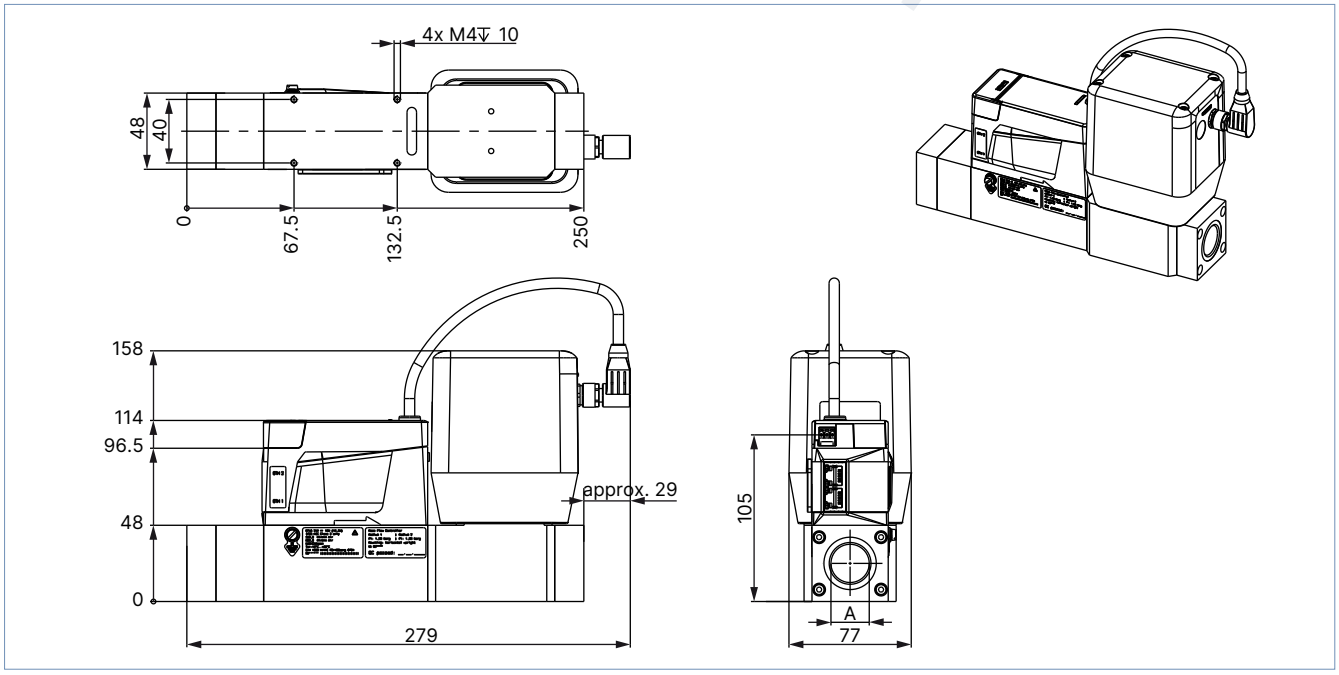

DTS 1000338235 EN Version: W Status: RL (released | freigegeben | valide) printed: 16.12.2025

valvesgo.com

MFC with valve Type 3285 (DN 20 and DN 25)

Variant with base block A2 for large nominal flow rates

Note:
Dimensions in mm

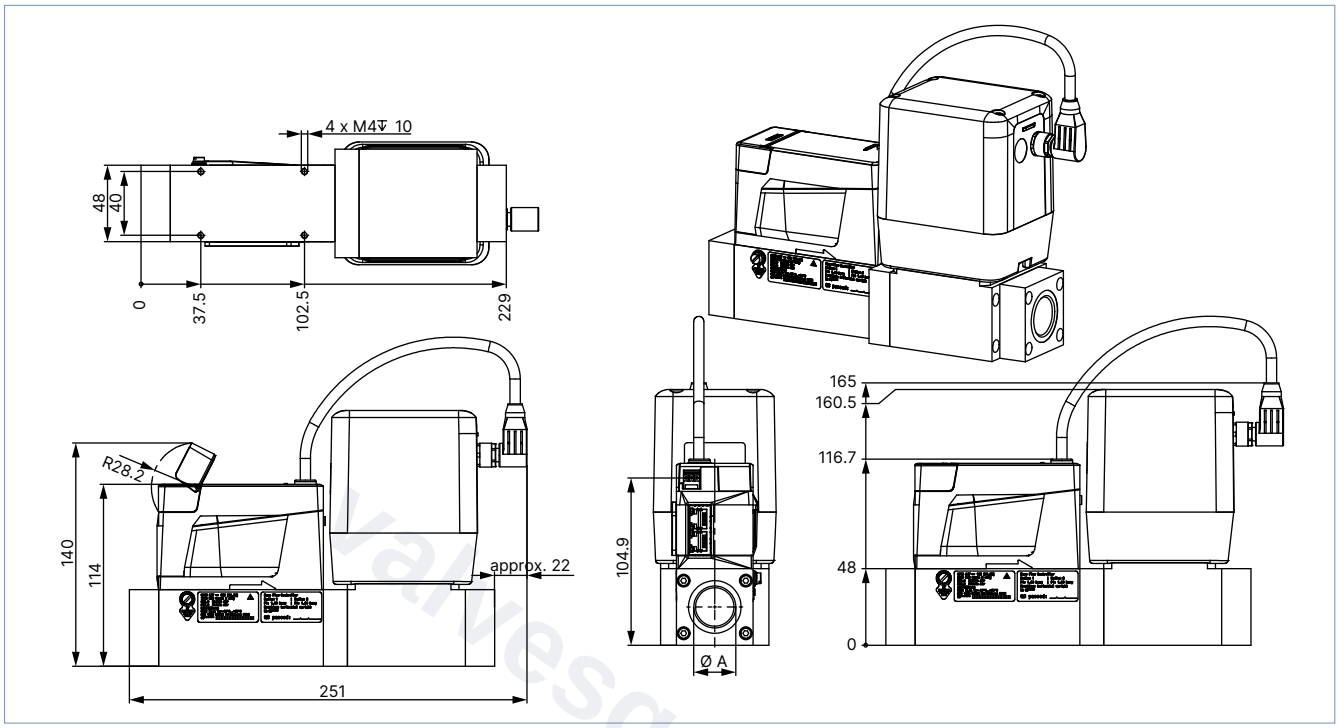

Variant with base block A3 for very large nominal flow rates

Note:
- From a nominal flow rate Q_N > 1500 l/min onwards, the overall length increases by 30 mm.
- Dimensions in mm

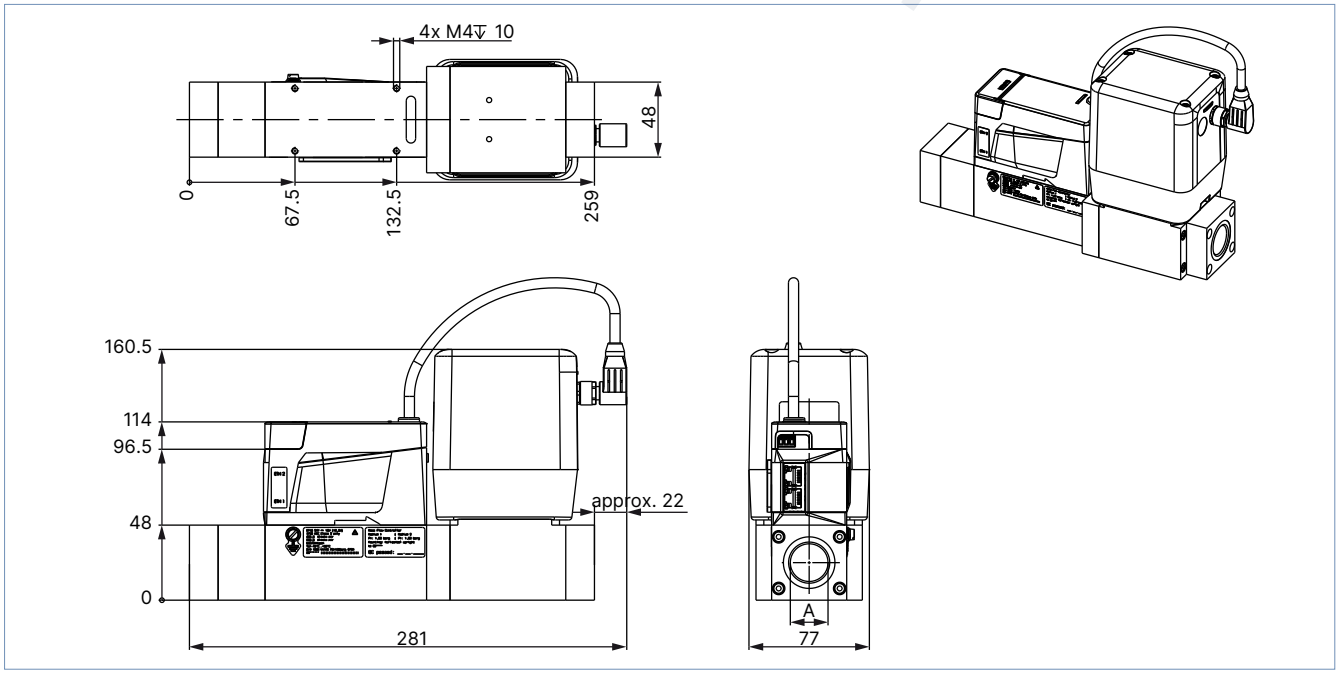

DTS 1000338235 EN Version: W Status: RL (released | freigegeben | valide) printed: 16.12.2025

valvesgo.com

4.4. MFM variant

Variant with base block 00 or A1 for small nominal flow rates

Note:
Dimensions in mm

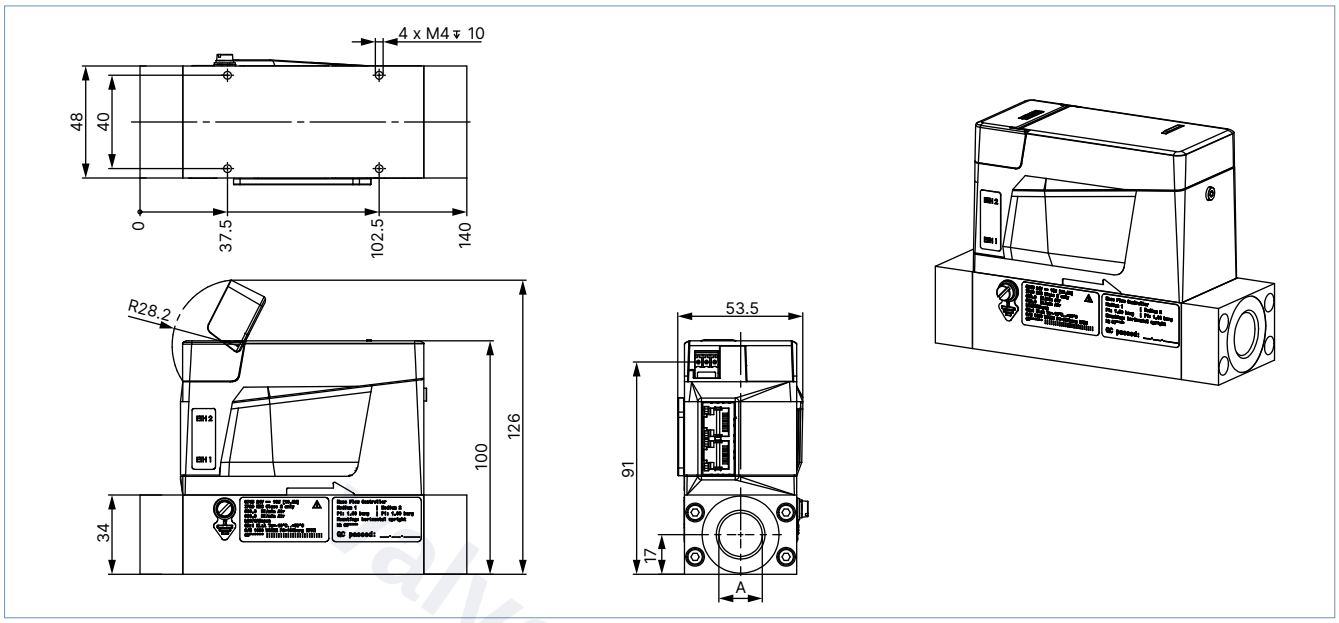

Variant with base block A2 for large nominal flow rates

Note:
Dimensions in mm

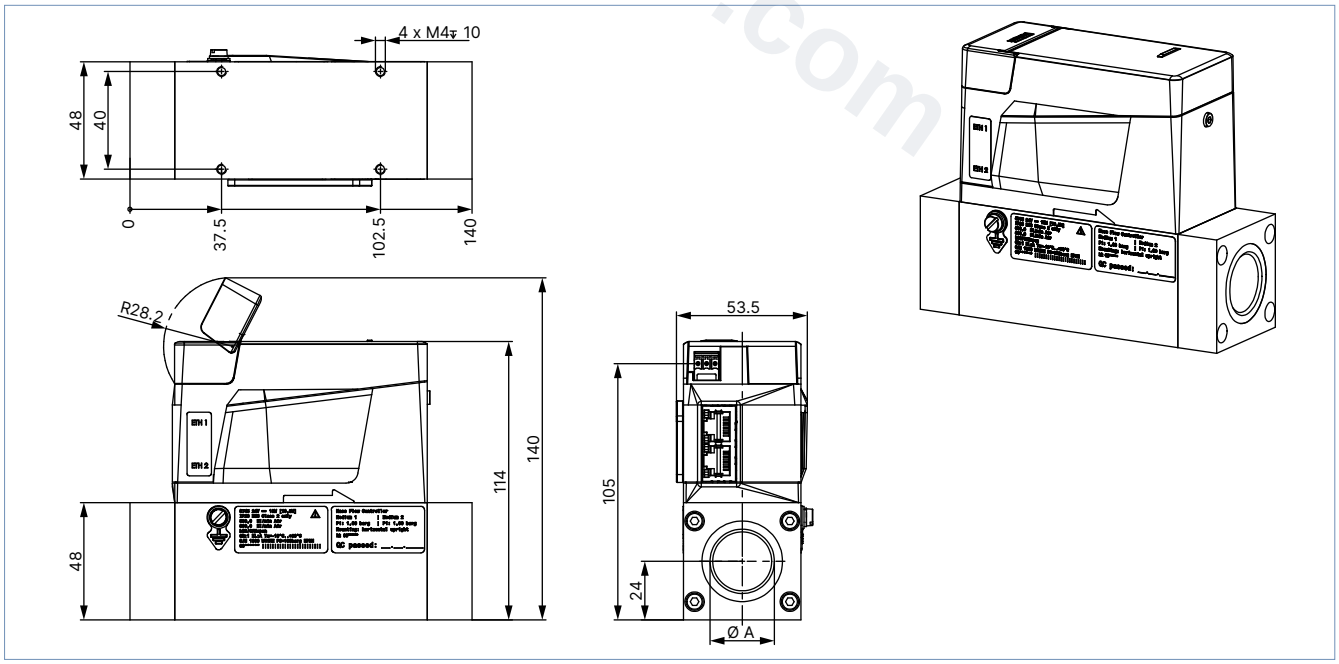

DTS 1000338235 EN Version: W Status: RL (released | freigegeben | valide) printed: 16.12.2025

valvesgo.com

Variant with base block A3 for very large nominal flow rates

Note:

- For a nominal flow Q_N > 1500 l/min onwards, the overall length increases by 30 mm.
- Dimensions in mm

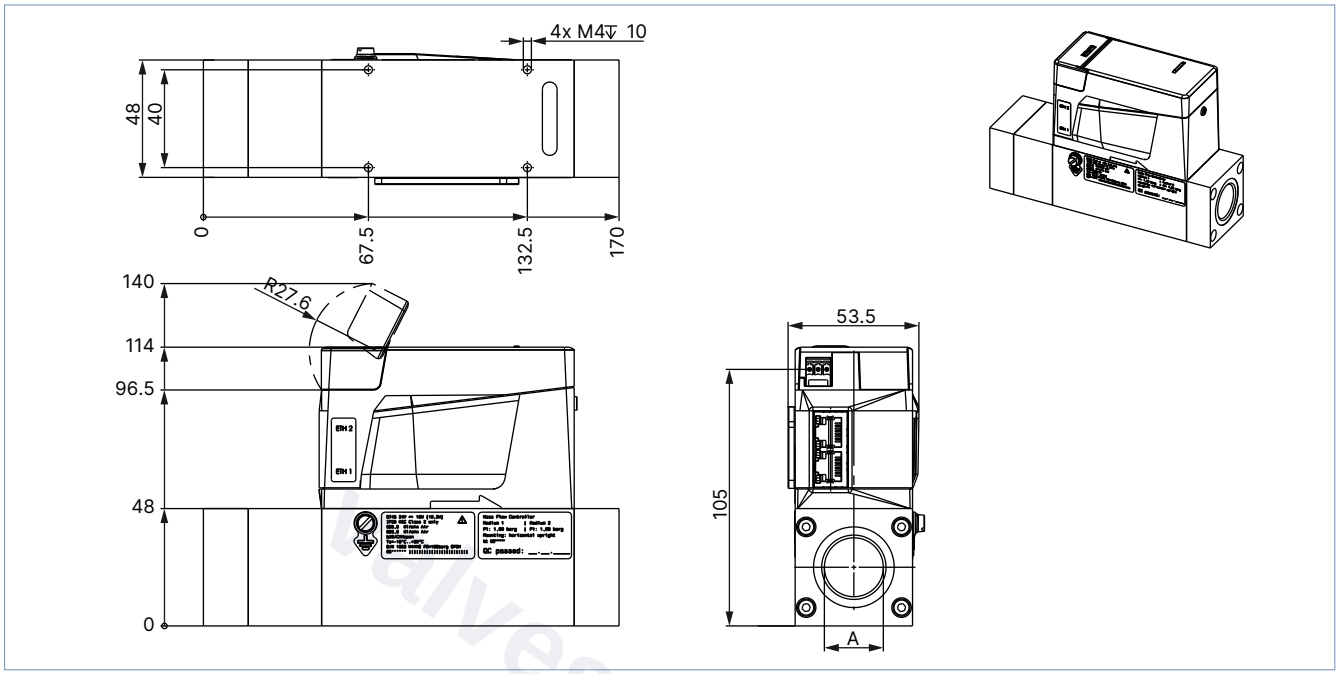

DTS 1000338235 EN Version: W Status: RL (released | freigegeben | valide) printed: 16.12.2025

valvesgo.com

5. Product connections

5.1. Communication

Industrial Ethernet

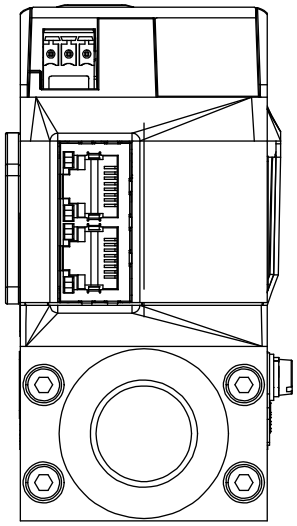

Terminal strip, 3-pin	Pin	Assignment
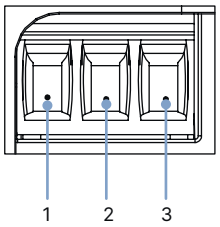	1	FE (functional earth)
	2	DGND
	3	24 V

RJ45 socket	Pin	Assignment
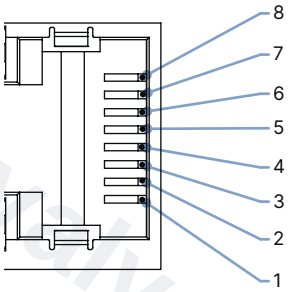	1	TX +
	2	TX –
	3	RX +
	4	Not connected
	5	Not connected
	6	RX –
	7	Not connected
	8	Not connected
	Housing	Shielding

Analogue

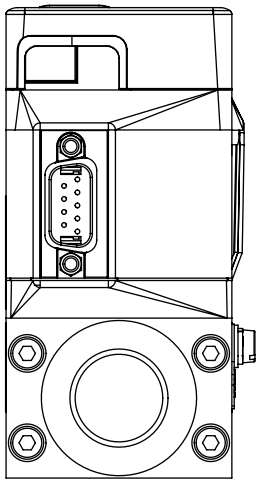

D-Sub plug, 9-pin	Pin	Assignment
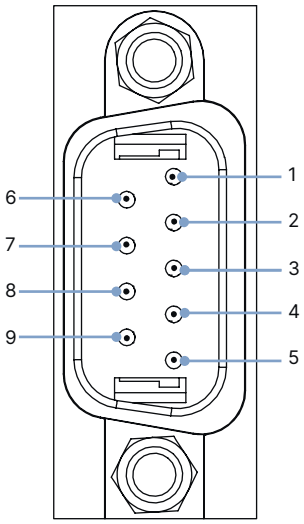	1	Digital input
	2	GND (for supply voltage and digital input)
	3	24 V
	4	Relay, normally closed contact
	5	Relay, reference contact
	6	Set-point value input +
	7	Set-point value input GND
	8	Actual value output
	9	Actual value output GND
	Housing	Shielding

DTS 1000338235 EN Version: W Status: RL (released | freigegeben | valide) printed: 16.12.2025

valvesgo.com

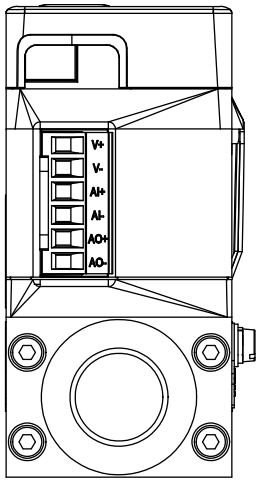

Terminal strip, 6-pin	Pin	Assignment
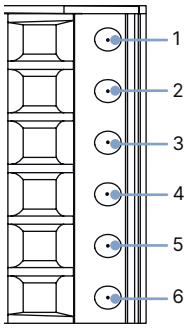	1	24 V
	2	GND
	3	Set-point value input +
	4	Set-point value input GND
	5	Actual value output +
	6	Actual value output GND

Modbus RTU

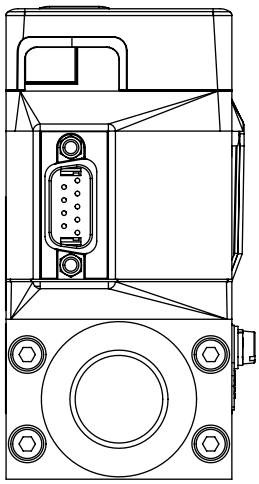

D-Sub plug, 9-pin	Pin	Assignment
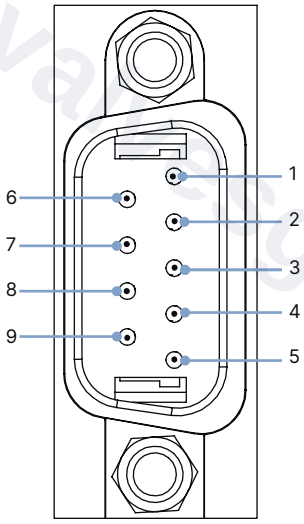	1	Not connected
	2	GND
	3	24 V
	4	Not connected
	5	Not connected
	6	RS-485-Y
	7	RS-485-Z
	8	RS-485-B
	9	RS-485-A
	Housing	Shielding

DTS 1000338235 EN Version: W Status: RL (released | freigegeben | valide) printed: 16.12.2025

valvesgo.com

6. Performance specifications

6.1. MFM pressure loss diagram

The diagram shows an example of the pressure loss curves with air flowing through. To determine the pressure loss of other gases, the corresponding air equivalent must first be calculated and the base block used for the other gas must be taken into account.

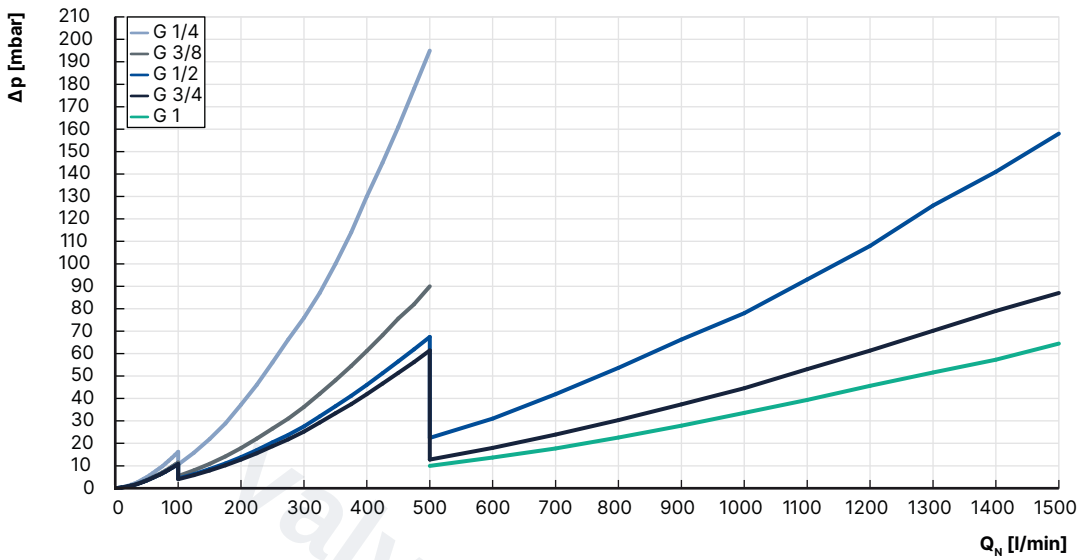

Formula for calculating the pressure loss in an MFM:

$$\Delta P_{Gas} = \Delta P_{Air} \sqrt{\frac{\rho_{N\ Gas}}{\rho_{N\ Air}}}$$

6.2. Nominal flow rate of typical gases

Note:

- All values refer to 1013.25 mbar abs and 273.15 K (0 °C) (Index N).
- Other gases and gas mixtures are possible on request.

Gas	Min. Q_N [l/min]	Max. Q_N [l/min]
Acetylene	20	320 (from 65 l/min with air calibration)
Ammonia	8	1000
Argon	20	1600
Carbon dioxide	20	800
Air	20	2500
Methane	20	1200
Propane	20	200
Oxygen	20	2500
Nitrogen	20	2500

DTS 1000338235 EN Version: W Status: RL (released | freigegeben | valide) printed: 16.12.2025

valvesgo.com

6.3. Derating diagram for electromotive variants

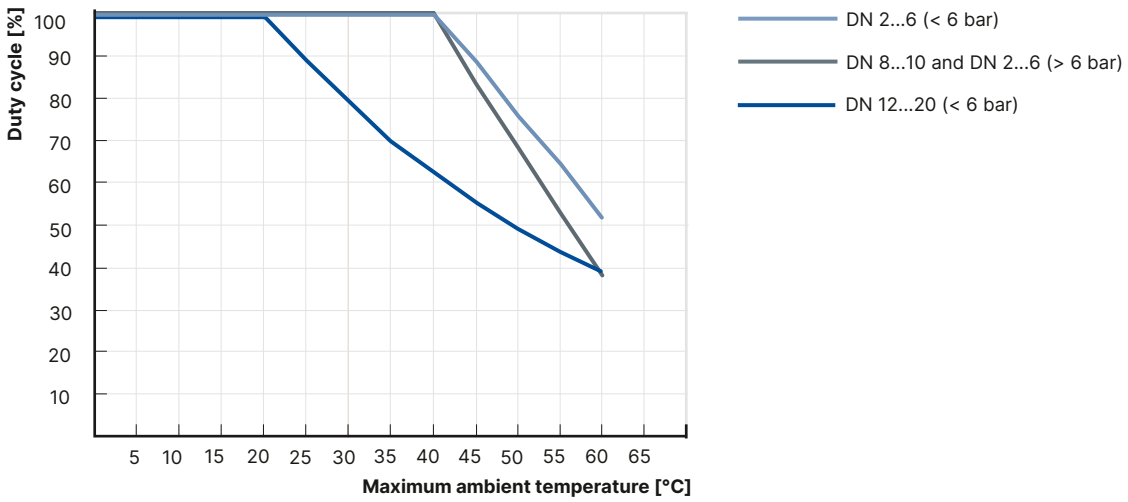

7. Product operation

7.1. Measurement principle

This sensor works as a hot-film anemometer in the so called CTA operational mode (Constant Temperature Anemometer). 2 resistors with a precisely specified temperature coefficient located directly in the media flow and 3 further resistors are connected to form a measuring bridge. The first resistor in the gas flow (R_T) measures the fluid temperature, while the second, low value resistor (R_S) is always heated just enough to keep it at a fixed, specified excess temperature with respect to the fluid temperature. The heating current required for this is a measure of the heat dissipation and represents the primary measured variable.
Adequate flow conditioning within the MFC and calibration with high-quality flow standards ensure that the amount of gas flowing through per time unit can be derived from the primary signal with a high degree of accuracy.

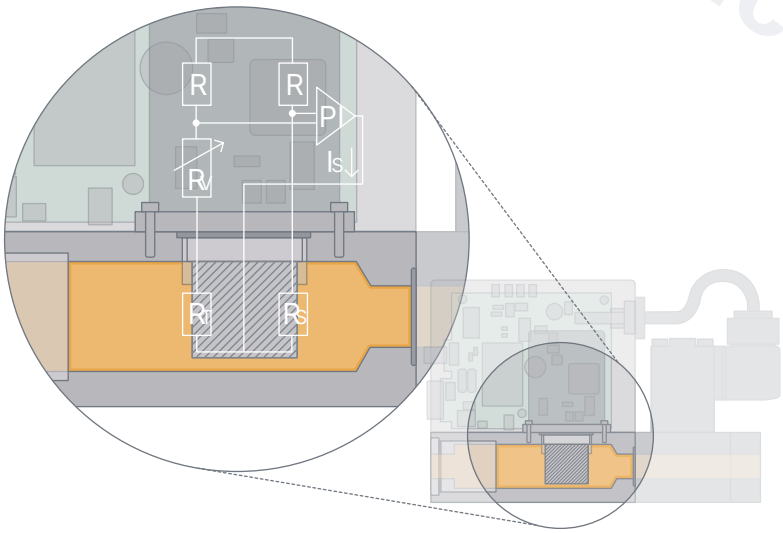

DTS 1000338235 EN Version: W Status: RL (released | freigegeben | valide) printed: 16.12.2025

valvesgo.com

8. Product accessories

8.1. Bürkert Communicator software

Note:
The corresponding communication software can be downloaded from the website **Type 8920** ▶.

The Bürkert Communicator is the most important software component of the EDIP (Efficient Device Integration Platform). Various features of this universal tool simplify the configuration and parametrisation of devices equipped with a digital CANopen-based interface. With this tool, the user has a complete overview of cyclic process values as well as acyclic diagnostic data. The integrated graphical programming environment enables the creation of decentralised sub-system control functions. The connection to the PC is established with a USB-büS interface set. The adapter is available as an accessory (see "9.5. Ordering chart accessories" on page 26).

The Bürkert Communicator enables:

- Configuration, parametrisation and diagnosis of EDIP devices / networks
- Switching between defined gases
- Easy and comfortable mapping of cyclic values
- Graphic display, monitoring and storage of process values
- Firmware update of the connected EDIP devices
- Saving and restoring device configurations
- Zero-point adjustment in case of changed ambient conditions
- Guided re-calibration routine

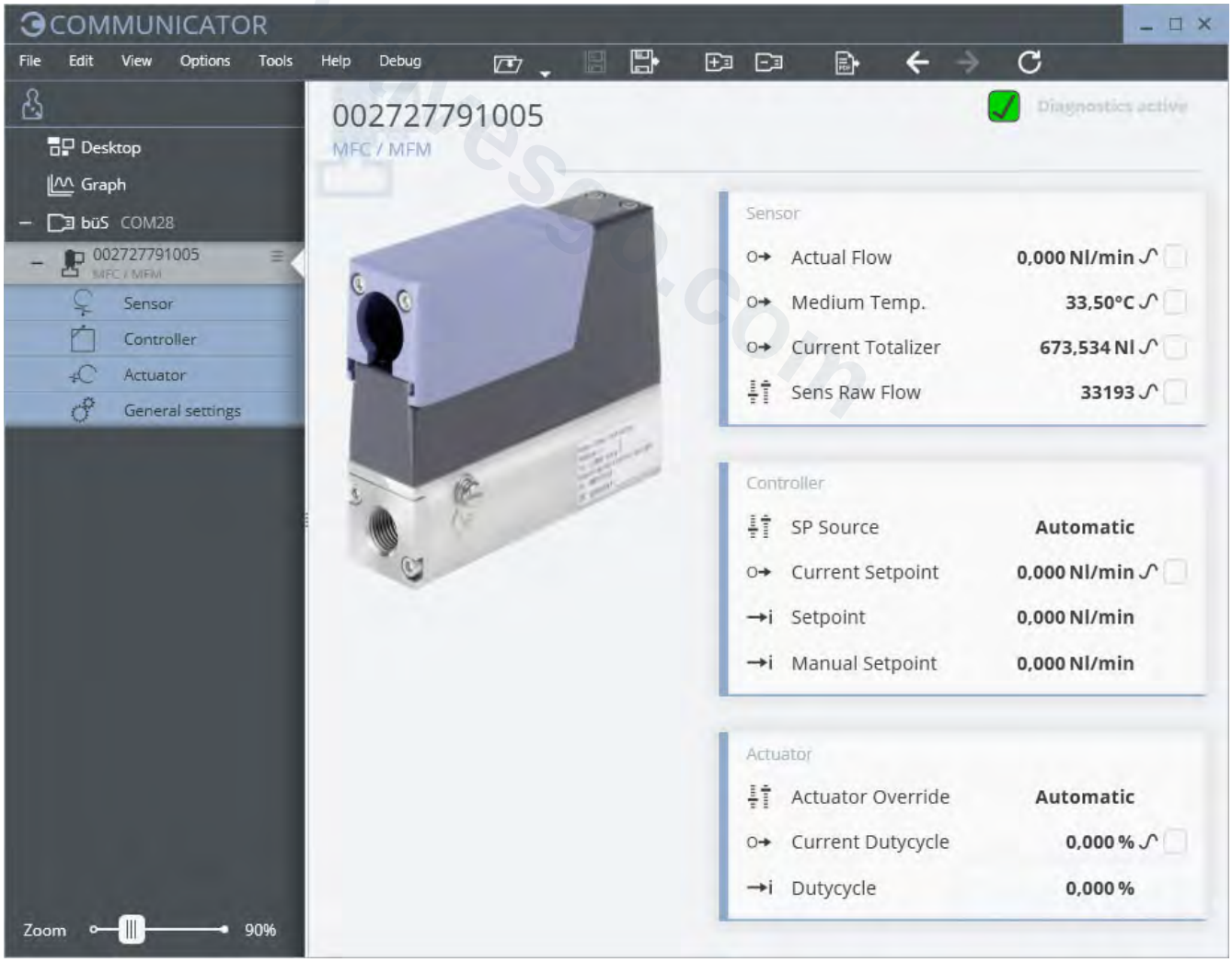

DTS 1000338235 EN Version: W Status: RL (released | freigegeben | valide) printed: 16.12.2025

valvesgo.com

8.2. Connecting Type 8745 with the Bürkert Communicator software

The Bürkert Communicator interface is based on CANopen. An appropriate bus termination is mandatory. Therefore, Therefore, activate the switchable terminating resistor on the büS stick.
The device is connected via the micro USB socket (USB-büS interface set 2 contains the necessary accessories).
Note: no external power supply must be connected to the micro USB socket. The device must be provided with power as described in chapter "5. Product connections" on page 20.

8.3. Configuration management for easy device replacement

If a device needs to be replaced, the memory card can be removed from the defective device and can be inserted into the new device. This transfers all data from the device to be replaced to the new device. The memory card is available as an accessory and must be ordered separately (see "9.5. Ordering chart accessories" on page 26).
In order to successfully exchange the device, it is necessary that both the new device and the device to be replaced have the same article number.

8.4. Web server for Industrial Ethernet variant

All Industrial Ethernet-based devices (except for the EtherCAT® protocol) from software version A.13.00.00 onwards have an integrated web server. The server can be accessed via a web browser when entering the device's IP address (factory setting IP192.168.1.100).

9. Ordering information

9.1. Bürkert eShop

Bürkert eShop – Easy ordering and quick delivery

You want to find your desired Bürkert product or spare part quickly and order directly? Our online shop is available for you 24/7. Sign up and enjoy all the benefits.

Order online now

9.2. Recommendation regarding product selection

Note:
Use the Product Enquiry Form (see "9.4. Bürkert Product Enquiry Form" on page 26) for information on the device layout and send it to us once completed.

For the proper choice of the actuator orifice within the MFC, you need to know not only the required maximum flow rate Q_N but also the pressure values directly upstream and downstream of the MFC (p_1, p_2) at Q_N. These are often not identical to the inlet and outlet pressure of the entire system, because there are usually additional flow resistances (pipework, additional shut-off valves, nozzles, etc.) both upstream and downstream of the MFC.
Use the Product Enquiry Form to indicate the pressures directly upstream and downstream of the MFC. If the pressure values are unknown or not accessible by measurement, an estimation is necessary, taking into account the approximate pressure drops via the flow resistances before and after the MFC at Q_N. The maximum expected inlet pressure $p_{1\,max}$ must be specified to ensure the tight-closing function of the actuator in all operating states.

DTS 1000338235 EN Version: W Status: RL (released | freigegeben | valide) printed: 16.12.2025

valvesgo.com

9.3. Bürkert product filter

Bürkert product filter – Get quickly to the right product

You want to select products comfortably based on your technical requirements?
Use the Bürkert product filter and find suitable articles for your application quickly and easily.

Try out our product filter

9.4. Bürkert Product Enquiry Form

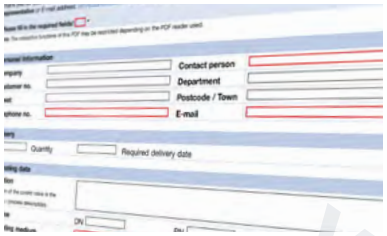

Bürkert Product Enquiry Form – Your enquiry quickly and compactly

Would you like to make a specific product enquiry based on your technical requirements? Use our Product Enquiry Form for this purpose. There you will find all the relevant information for your Bürkert contact. This will enable us to provide you with the best possible advice.

Fill out the form now

9.5. Ordering chart accessories

Description	Article number.
General accessories	
USB-büS interface set 2 (Type 8923) for connection to the Bürkert Communicator software: includes büS stick, connection cable to M12 plug, M12 connection cable on micro USB for the büS service interface and Y-distributor, cable length: 0.7 m	772551
Power supply unit Phoenix Class2 (Type 1573), 85...240 V AC/24 V DC, 1.25 A, NEC Class 2 (UL 1310)	772438
Power supply unit for standard rail (Type 1573), 100...240 V AC/24 V DC, 1 A, NEC Class 2 (UL 1310)	772361
Power supply unit for standard rail (Type 1573), 100...240 V AC/24 V DC, 2 A, NEC Class 2 (UL 1310)	772362
Power supply unit for standard rail (Type 1573), 100...V AC/24 V DC, 4 A	772363
Memory card	On request
Device description files for software interfaces	Download from **Type 8745** ▶
Bürkert Communicator software	Download from **Type 8920** ▶
For Type 8745 Analogue	
Terminal strip, 6-pin (standard for Type 8745, included in the scope of delivery of the corresponding analogue variant)	On request
D-sub adapter cable, on strand, cable length: 5 m	580882
D-sub adapter cable, on strand, cable length: 10 m	580883

DTS 1000338235 EN Version: W Status: RL (released | freigegeben | valide) printed: 16.12.2025

valvesgo.com