bürkert
FLUID CONTROL SYSTEMS

# Type SVVI

Disassembly/installation of pneumatic and electronic modules of valve island types 8640, 8644 and 8647 with 11 mm width per station

Demontage/Montage der pneumatischen und elektronischen Module der Ventilinseltypen 8640, 8644 und 8647 mit 11 mm Anreihmaß

Démontage/montage du module pneumatique et électronique des types d'îlots de distributeurs 8640, 8644 et 8647 avec cote de jonction de 11 mm

valvesgo.com

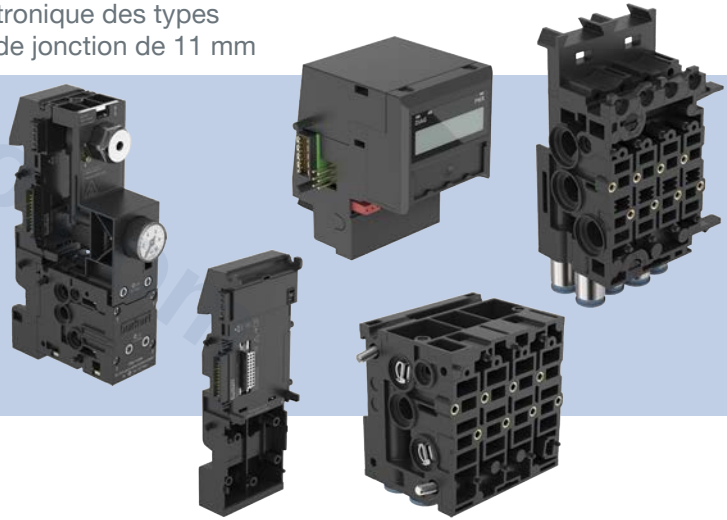

# Conversion Instructions

## Umbauanleitung
## Instructions de transformation

MAN 1000588204 EN Version: -Status: RL (released | freigegeben) printed: 06.09.2026

valvesgo.com

valvesgo.com

We reserve the right to make technical changes without notice.
Technische Änderungen vorbehalten.
Sous réserve de modifications techniques.

© Bürkert Werke GmbH & Co. KG, 2023

Operating Instructions 2307/00_EUml_00815427 / Original DE



valvesgo.com

1 ABOUT THESE INSTRUCTIONS ..... 4
1.1 Symbols used ..... 4
1.2 Definition of terms ..... 5
2 INTENDED USE ..... 6
3 BASIC SAFETY INSTRUCTIONS ..... 7
4 GENERAL NOTES ..... 8
4.1 Contact address ..... 8
4.2 Warranty ..... 8
4.3 Information on the Internet ..... 8
4.4 Standards and directives ..... 9
4.5 Approvals ..... 9
5 SYSTEM OVERVIEW ..... 9
5.1 Valve island type 8640 ..... 10
5.2 Valve island type 8644 ..... 10
5.3 Valve island type 8647 ..... 11
5.4 Valve blocks with AirLINE Quick ..... 12
5.5 Pneumatic connection modules ..... 12
5.6 Pneumatic base module ..... 14
5.7 Electronic base module ..... 14
5.8 Solenoid valves for pneumatic applications ..... 16
6 STRUCTURE RULES ..... 17
7 LABELLING ..... 17
8 PNEUMATICS DISASSEMBLY/INSTALLATION ..... 18
8.1 Disassembly ..... 19
8.2 Disassemble central connection module (types 8644 and 8647 only) ..... 21
8.3 Disassembling valve unit ..... 23
8.4 Installing valves ..... 24
8.5 Installation ..... 25
9 DISASSEMBLING/INSTALLING ELECTRONIC BASE MODULES ..... 26
9.1 Type 8640 ..... 27
9.2 Type 8644 ..... 27
9.3 Type 8647 ..... 28
10 LEFT INTERFACE MODULE DISASSEMBLY/ INSTALLATION (TYPE 8647 ONLY) ..... 29
11 START-UP ..... 30
12 MAINTENANCE ..... 31
13 TECHNICAL DATA ..... 31
14 PACKAGING, TRANSPORT, STORAGE ..... 32

valvesgo.com

# 1 ABOUT THESE INSTRUCTIONS

The disassembly/installation of pneumatic and electronic module for valve islands with 11 mm width per station (types 8640, 8644, 8647) is described in these instructions.

The disassembly description does not concern non-connected valve blocks or units.

For information on the disassembly of electrically and pneumatically connected valve blocks (types 8640, 8644, 8647), please refer to the operating instructions for the valve island type in question.

Operating instructions and data sheets for Bürkert devices can be found on the Internet at:
country.burkert.com

**Important safety information!**

- Carefully read these instructions.
- Above all, observe the safety instructions, intended use and usage conditions.
- People who work on the device must read and understand these instructions.

## 1.1 Symbols used

**DANGER!**

**Warns of an immediate danger.**

- Failure to observe these instructions will result in death or serious injuries.

**WARNING!**

**Warns of a potentially hazardous situation.**

- Failure to observe these instructions may result in serious injuries or death.

**CAUTION!**

**Warns of a potential danger.**

- Failure to observe these instructions may result in moderate or minor injuries.

**NOTE!**

**Warns of damage.**

Important tips and recommendations.

Refers to information in these operating instructions or in other documentation.

- Designates instructions to avoid danger.

→ Designates a procedure which you must carry out.


valvesgo.com

## 1.2 Definition of terms

| Term | in these instructions, refers to |
|---|---|
| Device | Valve island of the types 8640, 8644 or 8647 |
| Module | Connection module, valve unit |
| Valve island, valve block | Modular, electro-pneumatic system consisting of connection modules and valve units, which was developed for use in a control cabinet or switch box |
| Valve unit | Is composed of pneumatic and electronic base module(s) an valves |
| Connection module | Is used for pneumatic supply and venting of the valve block and is also used for fastening the valve block to the standard rail |
| Pneumatic base module | Valve unit component. Supports the valves, is used for pneumatic supply and venting of the valves and provides the pneumatic working outputs. Various port and equipment options are available (see data sheet) |
| Electronic base module | Valve unit component. Contains the electric plug connections for the valves, electronics assembly for controlling the valves, and visual status indicators for type 8647 (LEDs for status indication and a graphic LCD) |
| Valve | Valves can be lined up and with plug connections at the rear, preferably used for valve islands, and plug contacts at the front, preferably used on valve blocks to control pneumatic actuators |

valvesgo.com

# 2 INTENDED USE

The pneumatic or electric modules are intended for building valve blocks (8640, 8644 and 8647). A valve block is designed to control pneumatic consumers in automation systems. The valve block may be used for controlling suitable pneumatic consumers only.

- Use the module only as intended. Non-intended use of the module may be dangerous to people, nearby equipment and the environment.
- Do not use the module to build, convert or repair certified valve blocks (e.g. for use in potentially explosive atmosphere or UL-compliant superstructures.
- Observe chapter “6 Structure rules” Page 17 during the installation of the valve block.
- Install the module in a suitable control cabinet or housing. The control cabinet or housing requirements correspond to those of the distributed I/O system (e.g. Siemens “SIMATIC ET 200SP/SP HA”), but to degree of protection IP54 as a minimum.
- Do not use the module outdoors.
- Prerequisites for safe and trouble-free operation are correct transportation, correct storage, installation, start-up, operation and maintenance.
- To use the device, observe the permitted data, operating conditions and usage conditions. These specifications can be found in the contract documents, the operating instructions and on the type label.
- Use the module only in conjunction with third-party devices and components recommended or approved by Bürkert.
- Use the modules only when they are in a perfect state.

The modules are intended exclusively for use in the industrial sector. The modules are not suitable for use in applications where there is danger to life and limb.

The valve island is only permitted in applications where there is a danger to life and limb if the SIA and EVS functions provided for this purpose are used with appropriate, approved equipment (safety relays, etc.).

valvesgo.com


valvesgo.com

# 3 BASIC SAFETY INSTRUCTIONS

These safety instructions do not take into account any unforeseen circumstances or events that occur during installation, operation and maintenance.

The operator is responsible for observing the location-specific safety regulations, also with reference to personnel.

**Risk of injury from high pressure, escaping medium and uncontrolled movement of the actuators.**

- Secure the actuators against shifting before working on the modules, device or system.
- Switch off the pressure before working on the modules, device or system. Vent or empty the lines.

**Risk of injury from electric shock.**

- Before working on the modules, device or system, switch off the power supply. Secure it against reactivation.
- Observe any applicable accident prevention and safety regulations for electrical devices.

**Risk of burns from hot device parts.**

- Keep the module away from highly flammable substances and media.

**Risk of injury due to improper installation and maintenance.**

- Only allow trained technicians to perform installation and maintenance work.
- Perform installation and maintenance work using suitable tools only.

**Risk of injury from unintentional activation and uncontrolled restart of the device and system.**

- Secure the system against unintentional activation.
- Ensure that the system starts up in a controlled manner only.

**Risk of injury due to allergic reaction to lubricants.**

- Avoid skin contact with lubricants.
- Wear protective gloves.

**General hazardous situations.**

To prevent injuries, observe the following:

- Transport, install and dismantle a heavy device only with the aid of a second person and using suitable equipment.
- Install module according to the regulations applicable in the respective country.
- Do not feed any aggressive or combustible media into the medium ports of the modules.
- Do not feed any liquids into the medium ports of the modules.
- Following interruption of the process, ensure that the process is restarted in a controlled manner.
  Observe sequence:
  1. Connect electrical power supply.
  2. Pressurise with medium.
- Do not modify the modules.
- Do not subject the modules to mechanical stress.
- Observe the general rules of technical equipment.

valvesgo.com

**ATTENTION**

**Electrostatically sensitive components and units.**

The modules contain electronic components that are susceptible to the effects of electrostatic discharging (ESD). Components that come into contact with electrostatically charged persons or objects are at risk. In the worst case scenario, these components will be destroyed immediately or fail after start-up.

- Meet the requirements specified by EN 61340-5-1 to minimise or avoid the possibility of damage caused by a sudden electrostatic discharge.
- Do not touch electronic components when the supply voltage is connected.

# 4 GENERAL NOTES

## 4.1 Contact address

**Germany**

Bürkert Fluid Control Systems
Sales Centre
Christian-Bürkert-Strasse 13–17
D-74653 Ingelfingen
Tel. +49 (0) 7940 - 10 91 111
Fax +49 (0) 7940 - 10 91 448
Email: info@burkert.com

**International**

The contact addresses can be found on the back pages of the printed Quickstart. Also at: country.burkert.com

## 4.2 Warranty

A precondition for the warranty is that the module is used as intended in consideration of the specified usage conditions.

Bürkert assumes no guarantee for valve blocks that have not been built or converted by Bürkert.

## 4.3 Information on the Internet

Operating instructions and data sheets for the valve blocks can be found on the internet at: country.burkert.com

valvesgo.com

## 4.4 Standards and directives

The modules conform to the EU directives as per the EU Declaration of Conformity (if applicable).

The applied standards, which are used to demonstrate conformity with the directives, are listed in the EU type examination certificate and/or the EU Declaration of Conformity (if applicable).

## 4.5 Approvals

Valve blocks with approvals (e.g. ATEX, IECEx) can only be built by Bürkert.

If valve blocks with approvals are converted, the approval is rendered void if the conversion has not been performed by Bürkert. In this case, the user is responsible for removing the corresponding approval label (see chapter “7 Labelling” Page 17).

# 5 SYSTEM OVERVIEW

This document is valid for the following valve island types with the width per station of 11 mm:

- 8640
- 8644
- 8647

Pneumatic modules connected to each other with latch hooks are used for these valve island types. The latch hooks are always located on the right side of each pneumatic module.

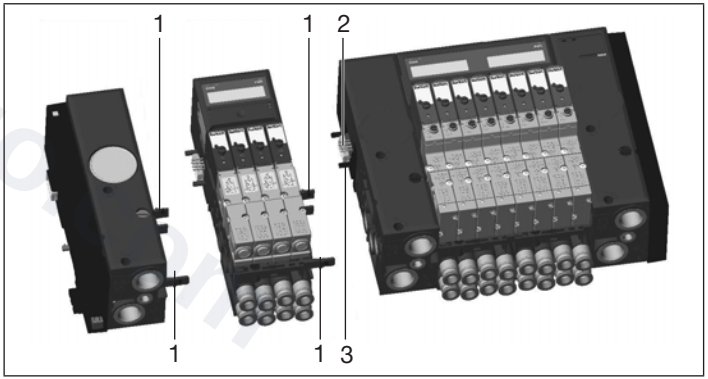


*Fig. 1: Depiction of latch hook on example type 8647*

| Item | Designation |
|---|---|
| 1 | Latch hook |
| 2 | Electrical push-in connector |
| 3 | Guide cones |

## 5.1 Valve island type 8640

Type 8640 is designed for use in an industrial environment. The valves can be easily and efficiently combined due to the modular structure.

*Fig. 2: Valve island type 8640*

Type 8640 is suitable for solving varied and complex control tasks thanks to its consistent modular structure with regard to pneumatic and electrical interfaces.

The arrangement of pneumatic modules with varying numbers of valves makes it possible to realise up to 24 valve functions on 1 valve island.

The electrical connection technique can be optionally carried out via

- Fieldbus interfaces
- Collective connection (parallel connection technique)
- Multi-pole interfaces

The valves allow different application possibilities. Housing and connection modules are manufactured from high-quality plastic (polyamide) and are easy to connect and release thanks to the built-in interlocking technology.

## 5.2 Valve island type 8644

Type 8644 is designed for distributed use in industrial environments. Electronics assemblies and armatures can be easily and efficiently combined due to the modular assembly.

*Fig. 3: Valve island type 8644*

valvesgo.com

Type 8644 is an electrical and pneumatic automation system that has been optimised for use in the control cabinet or switch box.

All electronic and pneumatic components are standardised in a continuous system, so that pneumatic, electric and electronic modules with different functions can be combined very easily with each other, if simple rules are followed.

All components are connected via a locking mechanism. The required electrical connections are also made as a result. For example, valves and power outlets with only 1 fieldbus connection can be combined. A large number of electronic modules (terminals) can be combined very easily with the valves installed on special pneumatic modules (valve segments).

The system consists of fieldbus nodes, a valve block and a connection module in its minimum configuration. Terminals can be arranged before and after the valve block.

## 5.3 Valve island type 8647

Type 8647 is a modular, electro-pneumatic system consisting of connection units and valve units. It is intended for complete integration into the distributed Siemens I/O systems “SIMATIC ET 200SP” and “SIMATIC ET 200SP HA”.

*Fig. 4: Valve block type 8647*

The valve block is used to integrate pneumatic pilot valves directly into SIMATIC ET 200SP / SP HA and to control them via SIMATIC ET 200SP / SP HA.

Pneumatic cylinders, pneumatically operated process valves or similar suitable pneumatic components can be connected to the pneumatic outputs.

Project engineering, parameterisation and configuration are carried out with the same tools as for SIMATIC ET 200SP/SP HA, e.g. SIMATIC “STEP 7”, “TIA-Portal” or “PCS7”.

Integration into any PROFIBUS or PROFINET system is carried out via GSD/GSDML. If Siemens project engineering tools are used, integration via HSP or HUP is also possible. This means that more functions and more convenient operation are possible.

## 5.4 Valve blocks with AirLINE Quick

When using the control cabinet base adaptation “AirLINE Quick”, the valve block is installed using a massive metal plate in the control cabinet base. In this case, the device supports the standard rail (if applicable, including the module of a distributed I/O system mounted on the rail).

*Fig. 5: Example of a valve block with AirLINE Quick control cabinet base adaptation*

Disassembly of the AirLINE Quick control cabinet base adaptation from the valve block by the user is not intended. You should therefore contact the Bürkert service for disassembly.

## 5.5 Pneumatic connection modules

The valve block is pneumatically supplied and vented via the connection modules. In addition, the valve block is attached to the standard rail via the connection modules.

### 5.5.1 Connection modules type 8640

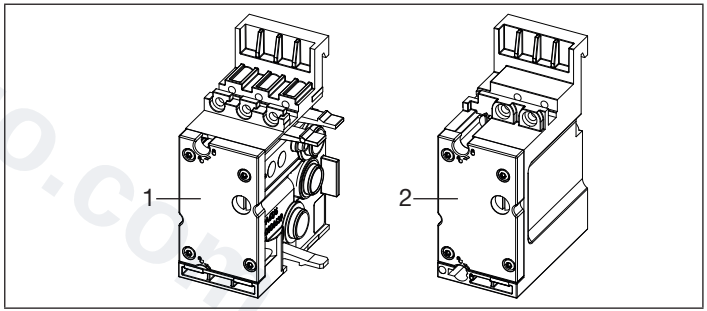


*Fig. 6: Connection modules type 8640*

| Item | Designation |
|---|---|
| 1 | Left connection module |
| 2 | Right connection module |


valvesgo.com

## 5.5.2 Connection modules type 8644

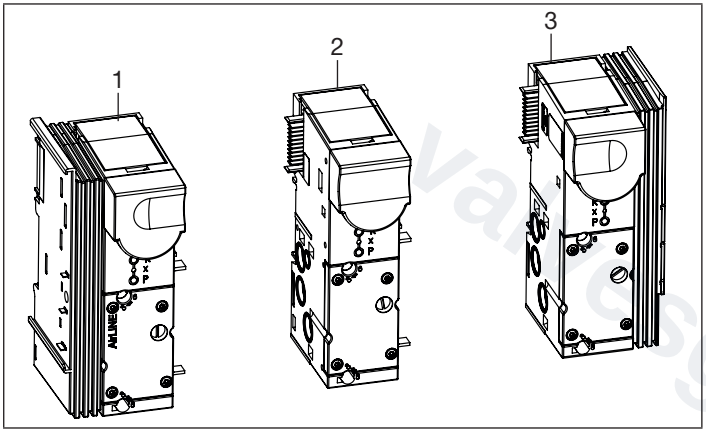


*Fig. 7: Connection modules type 8644*

| Item | Designation |
|---|---|
| 1 | Left connection module |
| 2 | Central connection module |
| 3 | Right connection module |

## 5.5.3 Connection modules type 8647

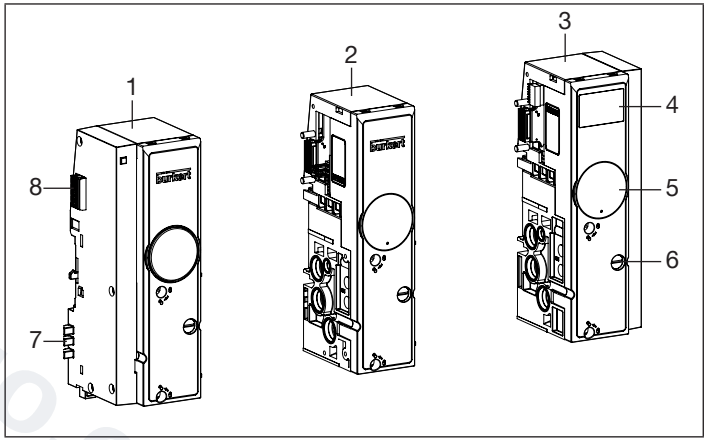


*Fig. 8: Connection modules type 8647*

| Item | Designation |
|---|---|
| 1 | Left connection module |
| 2 | Central connection module |
| 3 | Right connection module |
| 4 | LED indicator<br>(connection units with pressure sensor only) |
| 5 | Optional: pressure gauge |
| 6 | Fastening screws for valve block on standard rail |
| 7 | Plug connection for load voltage |
| 8 | Plug connection for backplane bus |

valvesgo.com

## 5.6 Pneumatic base module

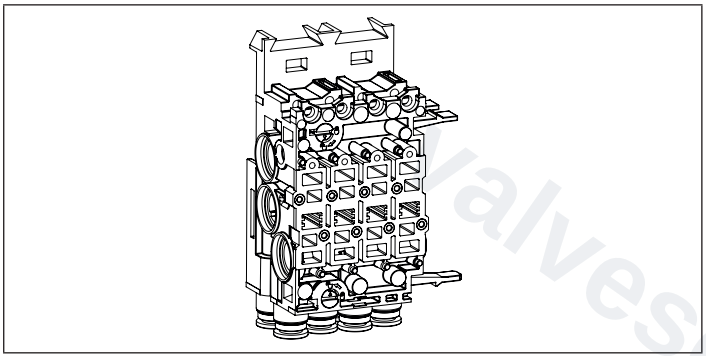

*Fig. 9: Pneumatic base module with 4 slots*

The pneumatic base module is part of the valve unit. It supports the valves, is used for pneumatic supply and venting of the valves and provides the pneumatic working outputs. Various port and equipment options are available (see data sheet).

## 5.7 Electronic base module

The electronic base module is part of the valve unit. It contains the electric plug connections for the valves, electronics assembly for controlling the valves, and visual status indicators for type 8647 (LEDs for status indication and a graphic LCD).

The electronic base module is usually connected to the neighbouring modules via its electrical interface. In this way, it receives both the power supply and the control signals for the valves on the valve slots.

### 5.7.1 Electronic base module type 8640

For type 8640, there are electronic base modules with slots for 6, 8 or 12 valves. 1 or 2 electrical outputs are provided per slot, depending on the valve type used.

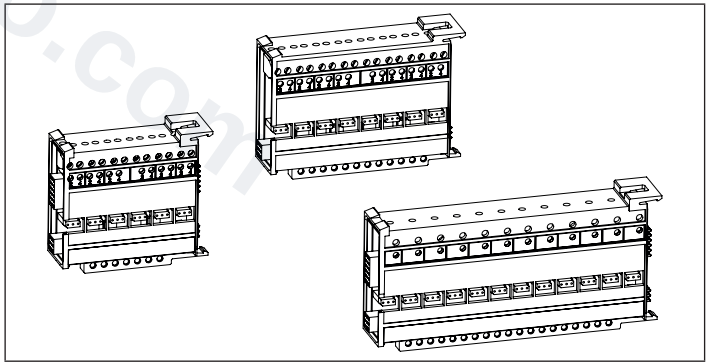

*Fig. 10: Electronic base module type 8640*

valvesgo.com


valvesgo.com

### 5.7.2 Electronic base module type 8644

For type 8644, there are electronic base modules with slots for 2 or 8 valves.

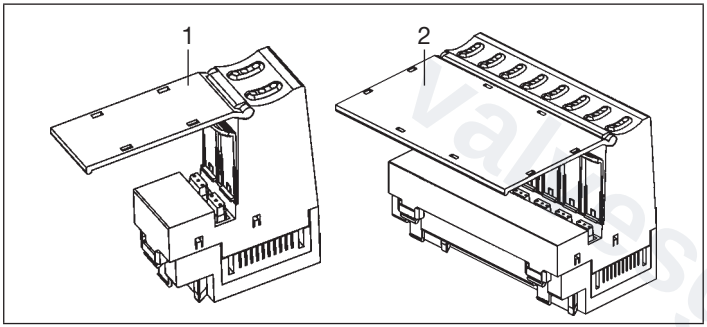


*Fig. 11: Electronic base module type 8644*

| Item | Designation |
|---|---|
| 1 | Electronic base module with 2 slots |
| 2 | Electronic base module with 8 slots |

### 5.7.3 Electronic base modules type 8647

For type 8647, there are electronic base modules with slots for 4 or 8 valves.

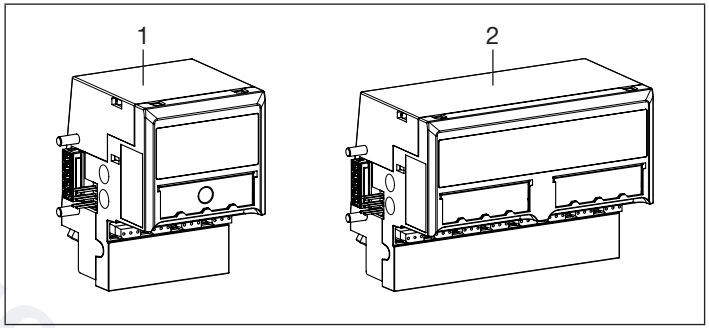


*Fig. 12: Electronic base modules type 8647*

| Item | Designation |
|---|---|
| 1 | Electronic base module with 4 slots |
| 2 | Electronic base module with 8 slots |

valvesgo.com

## 5.8 Solenoid valves for pneumatic applications

The following valves can be integrated into the valve units:

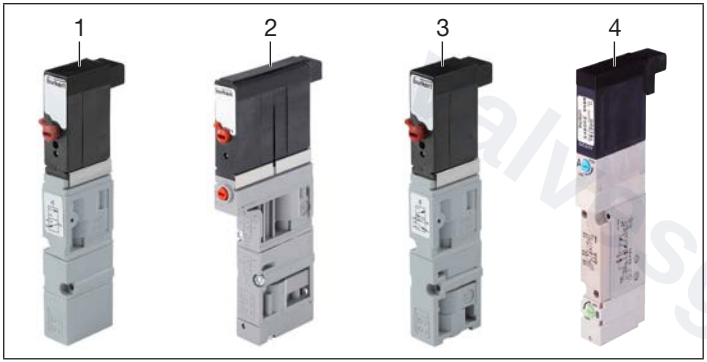


*Fig. 13: Solenoid valves for pneumatic applications that can be integrated*

| Item | Valve type | Function |
|---|---|---|
| 1 | 6524 | 3/2-way valve |
| 2 | 6524 | 2x3/2-way valve |
| 3 | 6525 | 5/2-way valve |
| 4 | 0460 | 5/2-way pulse valve |
| without fig. | 0460 | 5/3-way valve |
| without fig. | 0498 | Unlockable double check valve |

**Channel-by-channel safety-related shut-off**

Optionally, the valves of types 6524 and 6525 can be equipped with a 2nd connection (pressed-on cable). Safety-related shut-off is therefore possible for each channel individually. The valve variants are without manual override.

valvesgo.com

# 6 STRUCTURE RULES

Heed the structure rules when putting valve blocks together. Non-compliance with these rules may lead to problems with projection, start-up or operating the device.

Ask your contact person at Bürkert in case of doubt.

A valve block consists – when viewed from left to right – of a “left connection module”, one or more valve units and a “right connection module”.

“Central connection modules” can be placed between valve units, for example, to guarantee the mechanical fixation of a larger valve block on the standard rail or sufficient supply of medium to the valve.

# 7 LABELLING

If a valve block supplied by Bürkert is converted, the user is obliged to adapt the labelling (type label, approval label) by removing the old label and affixing a new one.

If valve blocks with approvals are converted, the approval is rendered void if the conversion is not performed by Bürkert. In this case, the user is responsible for removing the corresponding approval labels.

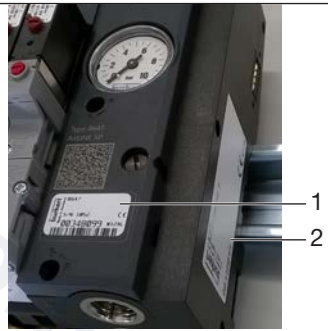


*Fig. 14: Labelling*

| Item | Designation |
|---|---|
| 1 | Type label |
| 2 | Approval label |

valvesgo.com

# 8 PNEUMATICS DISASSEMBLY/ INSTALLATION

**WARNING**

**Risk of injury due to improper installation.**

- Only trained specialist personnel may carry out installation and disassembly work.
- Only carry out installation work using suitable tools.

**CAUTION**

**Risk of injury due to high pressure and escaping medium.**

- Secure the actuators against shifting before working on the modules/units, device or system.
- Switch off the pressure before working on the modules/units, device or system. Vent or empty the lines.

**Risk of injury from electric shock.**

- Before working on the modules/units, device or system, switch off the power supply. Secure it against reactivation.
- Observe the applicable accident prevention and safety regulations for electrical devices.

**Risk of injury from sharp edges.**

Sharp edges on the EVS connection or on the contacts of the screw-type terminal can cause cuts.

- Wear suitable protective gloves.

**Risk of injury from slipping when locking or unlocking the modules/units.**

High force is required when locking or unlocking the modules/units. Hands may slip from the module/unit when locking or unlocking, due to the amount of force used. If sharp or pointed objects are within reaching distance, these may cause injuries.

- Wear suitable protective gloves.

**Risk of injury due to allergic reaction to lubricants.**

- Avoid skin contact with lubricants.
- Wear protective gloves.

**Risk of injury due to falling heavy device.**

During transportation or installation and disassembly work, a heavy device may fall down and cause injuries.

- Ensure throughout installation and disassembly that the modules/units cannot fall down.
- Transport, install and dismantle a heavy device only with the aid of a second person and using suitable equipment.

valvesgo.com


valvesgo.com

**ATTENTION**

**Electrostatically sensitive components and units.**

The units contain electronic components that are susceptible to the effects of electrostatic discharging (ESD). Components that come into contact with electrostatically charged persons or objects are at risk. In the worst case scenario, these components will be destroyed immediately or fail after start-up.

- Meet the requirements specified by EN 61340-5-1 to minimise or avoid the possibility of damage caused by a sudden electrostatic discharge.
- Do not touch electronic components when the supply voltage is connected.

## 8.1 Disassembly

The disassembly of unconnected modules/units is described in these instructions.

For information on the disassembly of electrically and pneumatically connected valve blocks (types 8640, 8644, 8647), please refer to the operating instructions for the valve island type in question.

The operating instructions can be found on the internet at: country.burkert.com

**Assembly aids:**

- Slotted screwdriver
- Cross-tip screwdriver

### 8.1.1 Dismantle left connection module

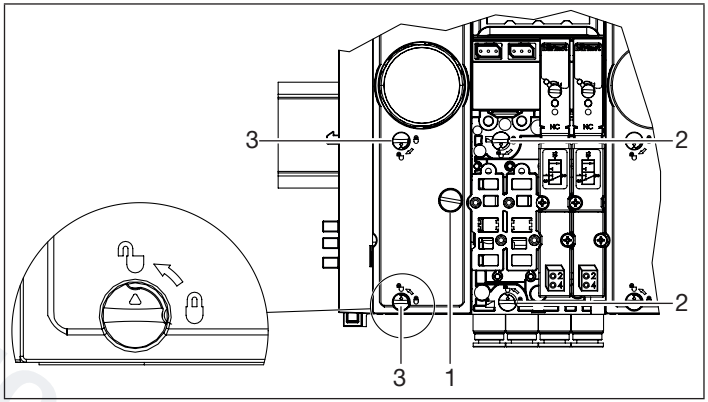


*Fig. 15: Unlocking elements and fastening screw*

| Item | Designation |
|---|---|
| 1 | Connection module fastening screw (on standard rail) |
| 2 | Valve unit unlocking element |
| 3 | Connection module unlocking element |

→ Carefully rotate the connection module fastening screw (Item 1, “Fig. 15”) anticlockwise with a slotted screwdriver until it comes to a stop.

→ Remove the valves from the valve unit on the right side. To do this, loosen the 2 fastening screws of each valve with a cross-tip screwdriver and remove the valves from the valve unit with the flange seal.

→ Set the bottom locking element (Item 2, “Fig. 15”) of the valve unit on the right side to the open position with a slotted screwdriver (the open position is labelled on the front of the unit with the aid of a pictogram).

→ Unlock the bottom latch hook. To do this, push the left connection module parallel to the standard rail of the locked valve unit away with a slotted screwdriver at the bottom latch hook, until the bottom latch hook unlocks (see “Fig. 16”).

⚠ Major effort required!

⚠ Do not damage latch hook and electrical contacts!

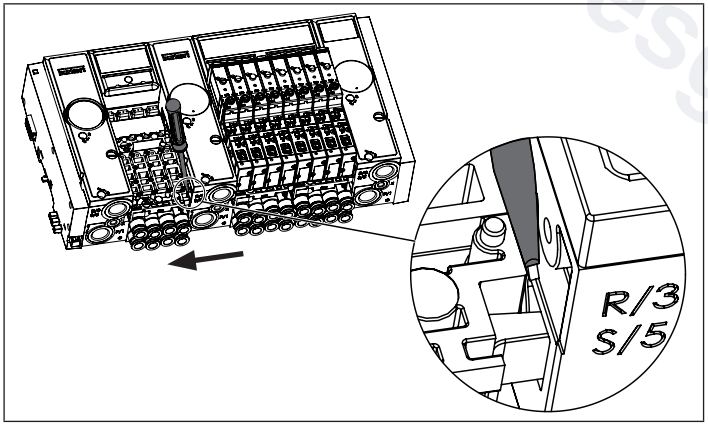


*Fig. 16: Unlocking bottom latch hook*

→ Set the top locking element (Item 2, “Fig. 15”) of the valve unit on the right side to the open position with a slotted screwdriver (the open position is labelled on the front of the unit with the aid of a pictogram).

→ Unlock the top latch hook. To do this, push the left connection module parallel to the standard rail of the locked valve unit away with a slotted screwdriver at the bottom latch hook, until the top latch hook unlocks (see “Fig. 17”).

⚠ Major effort required!

⚠ Do not damage latch hook and electrical contacts!

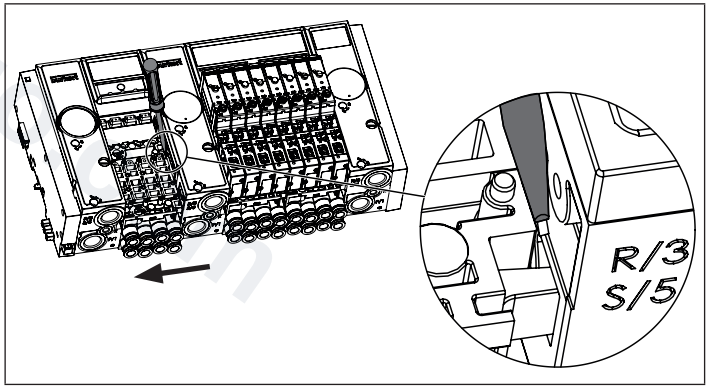


*Fig. 17: Unlocking top latch hook*


valvesgo.com

→ Next, tilt the connection module slightly upwards and loosen it from the standard rail (see “Fig. 18”)

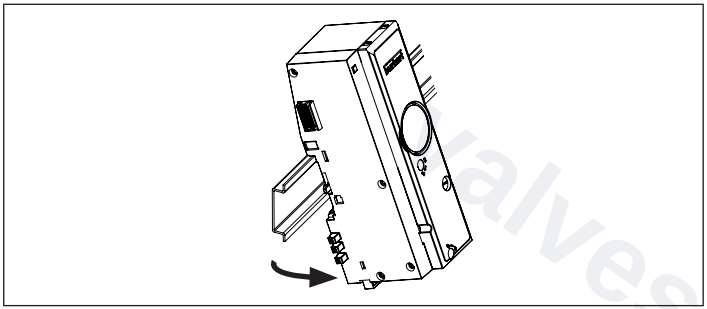

*Fig. 18: Loosening the connection module from the standard rail*

→ Follow chapter “8.4” when reinstalling the valves.

## 8.2 Disassemble central connection module (types 8644 and 8647 only)

→ Carefully rotate the connection module fastening screw (Item 1, “Fig. 15”) anticlockwise with a slotted screwdriver until it comes to a stop.

→ Remove the valves from the valve unit on the left and right sides. To do this, loosen the 2 fastening screws of each valve with a cross-tip screwdriver and remove the valves from the valve unit with the flange seal.

→ Set the bottom locking element of the connection module (Item 3, “Fig. 15”) and the valve unit on the right side (Item 2, “Fig. 15”) to the open position with a slotted screwdriver (the open position is labelled on the front of the unit with the aid of a pictogram).

→ Unlock the bottom latch hook. To do this, push the connection module parallel to the standard rail of the locked valve unit away with a slotted screwdriver at the bottom latch hook, until the bottom latch hook unlocks (see “Fig. 16”).

⚠ Major effort required!

⚠ Do not damage latch hook and electrical contacts!

valvesgo.com

→ Set the top locking element of the connection module (Item 3, “Fig. 15”) of the valve unit on the right side (Item 2, “Fig. 15”) to the open position with a slotted screwdriver (the open position is labelled on the front of the unit with the aid of a pictogram).

→ Unlock the top latch hook. To do this, push the connection module parallel to the standard rail of the locked valve unit away with a slotted screwdriver at the top latch hook, until the top latch hook unlocks (see “Fig. 17”).

⚠ Major effort required!

⚠ Do not damage latch hook and electrical contacts!

→ “Unlock” the left side of the connection module to be removed accordingly.

→ Next, tilt the connection module slightly upwards and loosen it from the standard rail (see “Fig. 18”)

→ Follow chapter “8.4” when reinstalling the valves.

### 8.2.1 Dismantle right connection module

→ Carefully rotate the connection module fastening screw (Item 1, “Fig. 15”) anticlockwise with a slotted screwdriver until it comes to a stop.

→ Remove the valves from the valve unit on the left side. To do this, loosen the 2 fastening screws of each valve with a cross-tip screwdriver and remove the valves from the valve unit with the flange seal.

→ Set the bottom locking element (Item 2, “Fig. 15”) of the valve unit on the left side to the open position with a slotted screwdriver (the open position is labelled on the front of the unit with the aid of a pictogram).

→ Unlock the bottom latch hook. To do this, push the right connection module parallel to the standard rail of the locked valve unit away with a slotted screwdriver at the bottom latch hook, until the bottom latch hook unlocks (see “Fig. 16”).

⚠ Major effort required!

⚠ Do not damage latch hook and electrical contacts!

valvesgo.com


valvesgo.com

→ Set the top locking element (Item 2, “Fig. 15”) of the valve unit on the left side to the open position with a slotted screwdriver (the open position is labelled on the front of the unit with the aid of a pictogram).

→ Unlock the top latch hook. To do this, push the left connection module parallel to the standard rail of the locked valve unit away with a slotted screwdriver at the top latch hook, until the top latch hook unlocks (see “Fig. 17”).

⚠ Major effort required!

⚠ Do not damage latch hook and electrical contacts!

→ Next, tilt the connection module slightly upwards and loosen it from the standard rail (see “Fig. 18”)

→ Follow chapter “8.4” when reinstalling the valves.

## 8.3 Disassembling valve unit

If applicable, electronic modules must also be disassembled beforehand in order to disassemble individual base modules.

→ Remove the valves from the valve unit to be disassembled and on the right and, if applicable, left sides. To do this, loosen the 2 fastening screws of each valve with a cross-tip screwdriver and remove the valves from the valve unit with the flange seal.

→ Set the bottom locking element (Item 2, “Fig. 15”) of the valve unit to be dismantled, and the valve unit on the right side, to the open position with a slotted screwdriver (the open position is labelled on the front of the unit with the aid of a pictogram).

→ Unlock the bottom latch hook. To do this, push the connection module parallel to the standard rail of the locked valve unit away with a slotted screwdriver at the bottom latch hook, until the bottom latch hook unlocks (see “Fig. 16”).

⚠ Major effort required!

⚠ Do not damage latch hook and electrical contacts!

→ Set the top locking element (Item 2, “Fig. 15”) of the valve unit to be dismantled, and the valve unit on the right side, to the open position with a slotted screwdriver (the open position is labelled on the front of the unit with the aid of a pictogram).

→ Unlock the top latch hook. To do this, push the connection module parallel to the standard rail of the locked valve unit away with a slotted screwdriver at the top latch hook, until the top latch hook unlocks (see “Fig. 17”).

valvesgo.com

⚠ Major effort required!

⚠ Do not damage latch hook and electrical contacts!

→ “Unlock” the left side of the valve unit to be removed accordingly.

→ Next, tilt the valve unit slightly upwards and loosen it from the standard rail (see “Fig. 18”).

→ Follow chapter “8.4” when reinstalling the valves.

! → Repeat the previous work steps to disassemble other units.

## 8.4 Installing valves

! When reinstalling the valves on the valve unit, note:

- the flange seal must be inserted correctly into the valve
- Tighten the fastening screws of the valves crosswise, observing the tightening torque stated in “Fig. 19”

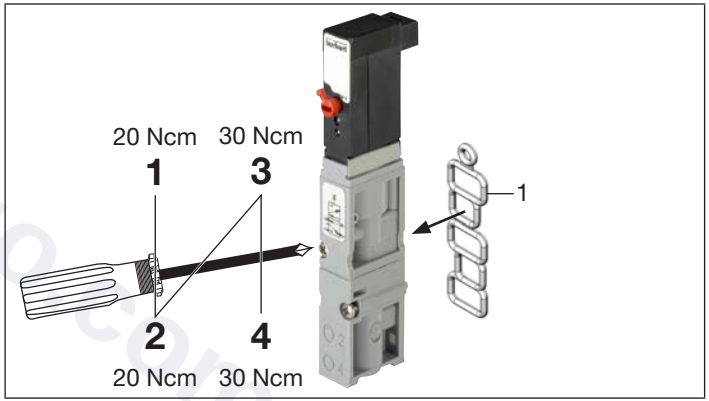


*Fig. 19: Install valve on valve unit*

| Item | Designation |
|---|---|
| 1 | Flange seal |

valvesgo.com

## 8.5 Installation

**Assembly aids:**

- Standard rail (top hat rail EN 50022 - 35 x 7.5 or 35 x 15, see dimensions drawing)
- Slotted screwdriver
- Installation oil (e.g. CENTOPLEX 2 by KLÜBER LUBRICATION)

**Preparatory work:**

→ Carefully rotate the connection module fastening screw (Item 1, “Fig. 15”) anticlockwise with a slotted screwdriver until it comes to a stop.

→ Lightly grease the sealing rings of the pneumatic modules (“Fig. 20”) with installation oil.

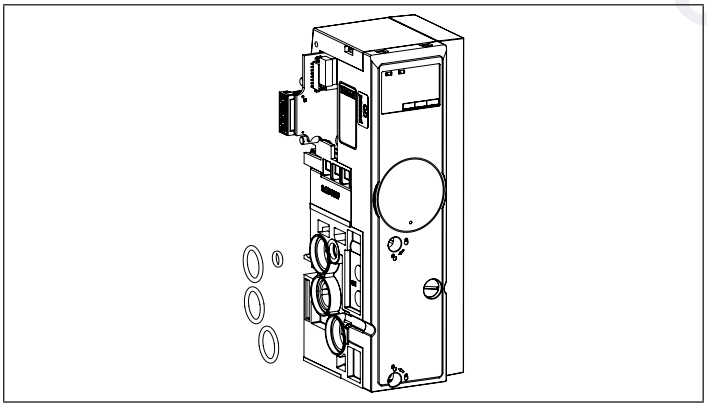

*Fig. 20: Pneumatic module sealing rings*

→ Set locking elements to closed position for previously disassembled units (the closed position is labelled on the front of the unit with the aid of a pictogram).

**Installation:**

→ Place the valve unit to be installed, slightly tilted upwards, on the standard rail and swing it onto the standard rail.

→ Position the next unit on the standard rail in the same way.

→ Slide units together so that a distance of approx. 0.5 cm is left between the units.

→ When sliding together again, make sure that the latch hooks, and then the guide cones and, if applicable, the electrical push-in connector are inserted into the opposite unit (see „Fig. 1: Depiction of latch hook on example type 8647“).

→ Lock units. Always only lock 2 units at the same time.

→ Repeat the previous work steps for other units.

**Concluding work:**

→ Conduct a visual inspection: the units must fit parallel to each other, with almost no gaps.

→ Fasten the valve block to the standard rail. To do this, carefully rotate the connection module fastening screws clockwise with a slotted screwdriver until they come to a stop.

→ Pressure test: apply pressure to the port P (do not exceed the max. pressure for the valves or valve island used here), check tightness.

valvesgo.com

# 9 DISASSEMBLING/INSTALLING ELECTRONIC BASE MODULES

**WARNING**

**Risk of injury due to improper installation.**

- Only trained specialist personnel may carry out installation and disassembly work.
- Only carry out installation work using suitable tools.

**CAUTION**

**Risk of injury due to high pressure and escaping medium.**

- Secure the actuators against shifting before working on the modules/units, device or system.
- Switch off the pressure before working on the modules/units, device or system. Vent or empty the lines.

**Risk of injury from electric shock.**

- Before working on the modules/units, device or system, switch off the power supply. Secure it against reactivation.
- Observe the applicable accident prevention and safety regulations for electrical devices.

**Risk of injury from sharp edges.**

Sharp edges on the EVS connection or on the contacts of the screw-type terminal can cause cuts.

- Wear suitable protective gloves.

**Risk of injury from slipping when locking or unlocking the modules/units.**

High force is required when locking or unlocking the modules/units. Hands may slip from the module/unit when locking or unlocking, due to the amount of force used. If sharp or pointed objects are within reaching distance, these may cause injuries.

- Wear suitable protective gloves.

**Risk of injury due to allergic reaction to lubricants.**

- Avoid skin contact with lubricants.
- Wear protective gloves.

**Risk of injury due to falling heavy device.**

During transportation or installation and disassembly work, a heavy device may fall down and cause injuries.

- Ensure throughout installation and disassembly that the modules/units cannot fall down.
- Transport, install and dismantle a heavy device only with the aid of a second person and using suitable equipment.

valvesgo.com


valvesgo.com

## 9.1 Type 8640

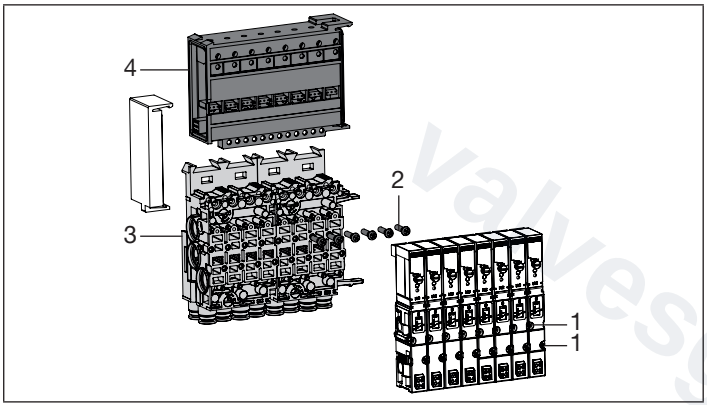


*Fig. 21: Disassembling/installing electronic base module type 8640*

| Item | Designation |
|---|---|
| 1 | Valve fastening screws |
| 2 | Connecting screws |
| 3 | Pneumatic base module |
| 4 | Electronic base module |

**Disassemble electronic base module:**

→ Loosen the 2 fastening screws of each valve with a cross-tip screwdriver and remove the valves from the valve unit with the flange seal.

→ Loosen connecting screws between pneumatic base module and electronic base module.

→ Remove electronic base module from above.

→ Remove entire electronics assembly if necessary, so that the electronics assembly is completely disconnected from the pneumatics.

**Install electronic base module:**

Installation is carried out in the reverse order to disassembly.

→ Place electronic base module on pneumatic base module.

→ Connect both modules with the connecting screws.

→ Follow chapter “8.4” when reinstalling the valves.

## 9.2 Type 8644

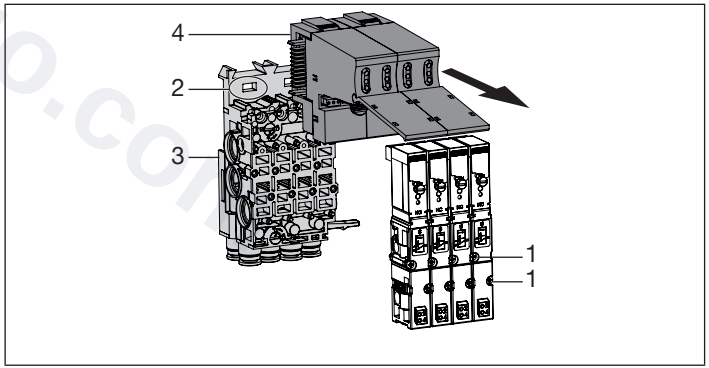


*Fig. 22: Disassembling/installing electronic base module type 8644*

| Item | Designation |
|---|---|
| 1 | Valve fastening screws |

valvesgo.com

| Item | Designation |
|---|---|
| 2 | Locking |
| 3 | Pneumatic base module |
| 4 | Electronic base module |

**Disassemble electronic base module:**

→ Loosen the 2 fastening screws of each valve with a cross-tip screwdriver and remove the valves from the valve unit with the flange seal.

→ Loosen both latch hooks on the back of the pneumatic base module (e.g. with a slotted screwdriver).

→ Remove electronic base module from the pneumatic base module in the direction of the arrow.

**Install electronic base module:**

Installation is carried out in the reverse order to disassembly.

→ Slide electronic base module onto pneumatic base module in the opposite direction of the arrow until it comes to a stop. The latch hooks must engage with the lock.

→ Follow chapter “8.4” when reinstalling the valves.

## 9.3 Type 8647

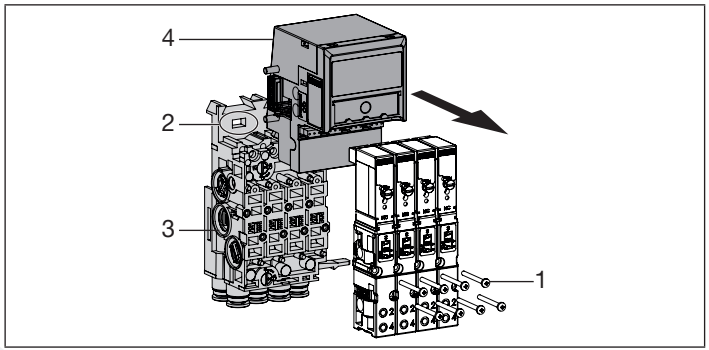


*Fig. 23: Disassembling/installing electronic base module type 8647*

| Item | Designation |
|---|---|
| 1 | Valve fastening screws |
| 2 | Locking |
| 3 | Pneumatic base module |
| 4 | Electronic base module |

**Disassemble electronic base module:**

→ Loosen the 2 fastening screws of each valve with a cross-tip screwdriver and remove the valves from the valve unit with the flange seal.

→ Loosen both latch hooks on the back of the pneumatic base module (e.g. with a slotted screwdriver).

→ Remove electronic base module from the pneumatic base module in the direction of the arrow.

valvesgo.com

**Install electronic base module:**

Installation is carried out in the reverse order to disassembly.

→ Slide electronic base module onto pneumatic base module in the opposite direction of the arrow until it comes to a stop. The latch hooks must engage with the lock.

→ Follow chapter “8.4” when reinstalling the valves.

# 10 LEFT INTERFACE MODULE DISASSEMBLY/INSTALLATION (TYPE 8647 ONLY)

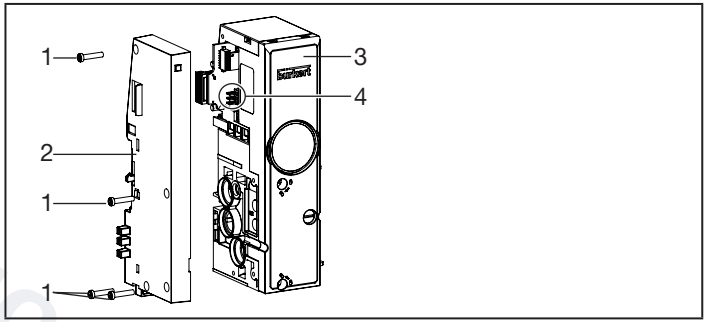


*Fig. 24: Disassemble/install left interface module*

| Item | Designation |
|---|---|
| 1 | Interface module fastening screws |
| 2 | Interface module |
| 3 | Connection module |
| 4 | Push-in connector |

valvesgo.com

**Assembly aids:**

- Key for hexalobular-internal screw T8

**Disassemble left interface module:**

→ Loosen fastening screws (hexalobular-internal screws T8).

→ Remove interface module on the left.

**Install left interface module:**

Installation is carried out in the reverse order to disassembly.

→ Carefully place interface module on the connection module so that the pins of the push-in connector enter the associated socket.

→ Carefully push the interface module in.

→ Screw interface module in with the 4 fastening screws (max. tightening torque 20 Ncm).

# 11 START-UP

**WARNING**

**Risk of injury due to improper operation.**

Improper operation may result in injuries as well as damage to the device and the surrounding area.

- Before start-up, ensure that the operating personnel are aware of and have completely understood the contents of the operating instructions.
- Observe the safety instructions and information on intended use.
- Only adequately trained personnel may start up the device/units.

**Risk of injury due to system malfunction.**

The system must be tested to ensure it functions properly before start-up. This prevents persons or systems from being put in danger during operation.

- Conduct a full function test and the necessary safety tests before the initial start-up.
- Plan for foreseeable errors in the tests.

**Risk of injury due to escaping medium**

- Conduct a tightness test before starting the device/units.

Please refer to the operating instructions for the relevant valve island type for further information on start-up.

The operating instructions can be found on the internet at: country.burkert.com

valvesgo.com

# 12 MAINTENANCE

**WARNING**

**Risk of injury due to improper installation and maintenance.**

- Only allow trained technicians to perform installation and maintenance work.
- Perform installation and maintenance work using suitable tools only.

**Risk of injury due to unintentional activation of the system and uncontrolled restart.**

- Secure equipment against unintentional activation.
- Ensure that the system starts up in a controlled manner only.

Please refer to the operating instructions for the relevant valve island type for the procedure for replacing a valve.

The operating instructions can be found on the internet at: country.burkert.com

# 13 TECHNICAL DATA

Please refer to the operating instructions for the relevant valve island type for technical data.

The operating instructions can be found on the internet at: country.burkert.com

valvesgo.com

# 14 PACKAGING, TRANSPORT, STORAGE

**ATTENTION**

**Damage in transit.**

Inadequately protected devices may be damaged during transport.

- Use shock-resistant packaging to protect the device against moisture and dirt during transport.
- Avoid exceeding or dropping below the permitted storage temperature.
- Protect the electrical interfaces and pneumatic connections from damage and dirt by placing protective caps on them.

**Incorrect storage may damage the device.**

- Store the device in a dry and dust-free location.
- Storage temperature –20...+60 °C.

## Environmentally friendly disposal

- Follow national regulations regarding disposal and the environment.
- Collect electrical and electronic devices separately and dispose of them as special waste.

Further information at country.burkert.com

valvesgo.com

valvesgo.com



valvesgo.com

bürkert
FLUID CONTROL SYSTEMS

valvesgo.com

country.burkert.com



valvesgo.com