bürkert
FLUID CONTROL SYSTEMS

Manually operated 2-way globe control valve

- Excellent control accuracy
- Exchangeable valve seats enable perfect coordination under the most demanding operating conditions
- Robust actuator with optional stroke limitation and locking
- Stainless steel valve body with flange, socket, clamp or welded connection

Product variants described in the data sheet may differ from the product presentation and description.

Can be combined with

Type 2301
Pneumatically operated 2-way Globe Control Valve

Type 3361
Electromotive 2-way globe control valve

Type 2921
Manually operated 2/2-way globe valve

Type 2960
Manually operated 2-way angle seat control valve

Type 8802
Continuous control valve systems ELEMENT – overview

Type 8840
Modular process valve cluster – distributor and collector

Type description

The Type 2961 control valve consists of a manual actuator and a globe valve body with exchangeable seats made of high-quality stainless steel. Each globe valve body can be equipped with up to 8 valve seat sizes and reaches the desired flow characteristic curve in interaction with parabolic cones. The precise spindle guide enables control, even under demanding operating conditions. A soft PTFE or PEEK seal guarantees reliable sealing. The actuator is made of high-quality plastic and is suitable for use in demanding environments. It possesses a visual position indicator and can be optionally equipped with stroke limitation and locking. The packing gland uses tried-and-tested V-seals and possesses spring compensation, which means that it does not need to be pulled back manually.

DTS 1000597490 EN Version: H Status: RL (released | freigegeben | valide) printed: 28.07.2026

© Christian Bürkert GmbH & Co. KG, Subject to alteration

valvesgo.com

Table of contents

1. General technical data 3

2. Approvals and conformities 4

2.1. General notes 4
2.2. Conformity 4
2.3. Standards 4
2.4. Explosion protection 4
2.5. Drinking water 4
2.6. Foods and beverages/Hygiene 5

3. Materials 6

3.1. Bürkert resistApp 6
3.2. Material specifications 6

4. Dimensions 7

4.1. Actuator 7
4.2. Body with flange connection 8
4.3. Body with threaded connection 9
4.4. Body with welded connection 10
4.5. Body with clamp connection 11

5. Performance specifications 12

5.1. Fluidic data 12
Flow characteristics 12
Overview of fluidic data for flow below seat (for liquids, steam and gases) 13
5.2. Operating limits 16
Operating limits for medium temperature and operating pressure 16
Operating limits for seat seal 17
Operating limits for optional variants 17

6. Product design and assembly 18

6.1. Product features 18

7. Ordering information 19

7.1. Bürkert eShop 19
7.2. Bürkert product filter 19
7.3. Bürkert Product Enquiry Form 19
7.4. Ordering chart accessories 19
Standard accessories 19

DTS 1000597490 EN Version: H Status: RL (released | freigegeben | valide) printed: 28.07.2026

valvesgo.com

1. General technical data

Product properties	
Dimensions	Further information can be found in chapter "4. Dimensions" on page 7.
Material	Further information can be found in chapter "3. Materials" on page 6.
Design	Globe control valve
Nominal diameter	DN 10...DN 100, NPS ⅜...NPS 4
Flow direction	Flow to open (below seat)
Performance data	
Operating pressure	0 bar(g)...25 bar(g) (see "5.1. Fluidic data" on page 12)
Nominal pressure	PN 25 (DIN EN 1333), Class 150 (DIN EN 1759)
Seat leakage according to DIN EN 60534 - 4:2006	Leakage class II Leakage class VI for PTFE and PEEK (see "5.1. Fluidic data" on page 12)
K_V value	0.1 m^3/h...140 m^3/h (see "5.1. Fluidic data" on page 12)
Operating characteristic	Equal percentage
Medium data	
Operating medium	Steam, water, neutral gases, alcohols, oils, fuels, hydraulic fluids, salt solutions, alkalis, organic solvents
Medium temperature	- 40 °C...+ 230 °C (see "5.2. Operating limits" on page 16)
Viscosity	Max. 600 mm^2/s
Product connections	
Port connection [1.)]	
Flange connection	DIN EN 1092 - 1 ANSI B 16.5 JIS 10K
Threaded connection	G (DIN ISO 228 - 1) NPT (ASME B1.20.1) RC (ISO 7 - 1)
Welded connection	DIN EN ISO 1127 / ISO 4200 / DIN 11866 series B DIN 11850 - 2 / DIN 11866 series A ASME BPE / DIN 11866 series C SMS 3008
Clamp connection	DIN 32676 series B (pipe: ISO 4200) DIN 32676 series A (pipe: DIN 11850 - 2) ASME BPE
Approvals and conformities	
Further information can be found in chapter "2. Approvals and conformities" on page 4.	
Environment and installation	
Environmental factors	Protect the device from electromagnetic interference, UV radiation and, when used outdoors, from weather conditions.
Ambient temperature	- 10 °C...+ 60 °C
Installation position	As required, preferably with actuator upright

1.) Further variants are available on request.

DTS 1000597490 EN Version: H Status: RL (released | freigegeben | valide) printed: 28.07.2026

valvesgo.com

2. Approvals and conformities

2.1. General notes

- The approvals and conformities listed below must be stated when making enquiries. This is the only way to ensure that the product complies with all required specifications.
- Not all available variants can be supplied with the below mentioned approvals or conformities.

2.2. Conformity

In accordance with the Declaration of Conformity, the product is compliant with the EU Directives. This includes the following directives:

- Pressure Equipment Directive 2014/68/EU

2.3. Standards

The applied standards which are used to demonstrate compliance with the EU Directives are listed in the EU-Type Examination Certificate and/or the EU Declaration of Conformity.

2.4. Explosion protection

Approval	Description
	Optional: Explosion protection (valid for the variable code PX51) As a category 2 device suitable for zone 1/21 and zone 2/22. **ATEX:** EPS 18 ATEX 2 008 X II 2G Ex h IIC T4...T2 Gb II 2D Ex h IIIC T135 °C...T300 °C Db **IECEx:** IECEx EPS 18.0007X Ex h IIC T4...T2 Gb Ex h IIIC T135 °C...T300 °C Db

Temperature class	T2	T3	T4
Maximum surface temperature	+ 300 °C	+ 200 °C	+ 135 °C
Ambient temperature	- 40 °C...+ 130 °C	- 40 °C...+ 130 °C	- 40 °C...+ 100 °C
Maximum medium temperature	+ 285 °C	+ 185 °C	+ 125 °C

Note: The ambient and medium temperature range may be limited by non-ex-relevant specifications. Observe the Operating Instructions.

2.5. Drinking water

Conformity	Description
H_2O	**Suitable for use in drinking water applications** The materials comply with the assessment principles (UBA) for materials in contact with drinking water (TrinkwasserV). **Stainless steel body** PF39: Suitable for products with medium temperature up to 85 °C (hot water)

DTS 1000597490 EN Version: H Status: RL (released | freigegeben | valide) printed: 28.07.2026

valvesgo.com

2.6. Foods and beverages/Hygiene

Conformity	Description
FDA	**FDA – Code of Federal Regulations (valid for the variable code PL02, PL03)** All wetted materials are compliant with the Code of Federal Regulations published by the FDA (Food and Drug Administration, USA) according to the manufacturer's declaration.
USP	**United States Pharmacopeial Convention (USP) (valid for the variable code PL04)** All wetted materials are biocompatible according to the manufacturer's declaration.
	EC Regulation 1935/2004 of the European Parliament and of the Council (valid for the variable code PL01, PL02) All wetted materials are compliant with EC Regulation 1935/2004/EC according to the manufacturer's declaration.
	China food GB Standards of the People's Republic of China (valid for the variable code PL10) All wetted materials are compliant with the requirement of China food GB Standards according to the manufacturer's declaration.

DTS 1000597490 EN Version: H Status: RL (released | freigegeben | valide) printed: 28.07.2026

valvesgo.com

valvesgo.com

3. Materials

3.1. Bürkert resistApp

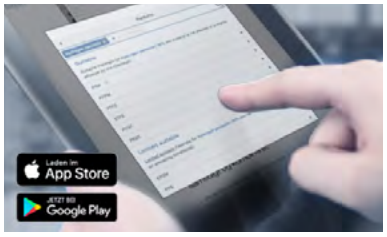

Bürkert resistApp – Chemical resistance chart

You want to ensure the reliability and durability of the materials in your individual application case? Verify your combination of media and materials on our website or in our resistApp.

Start chemical resistance check

3.2. Material specifications

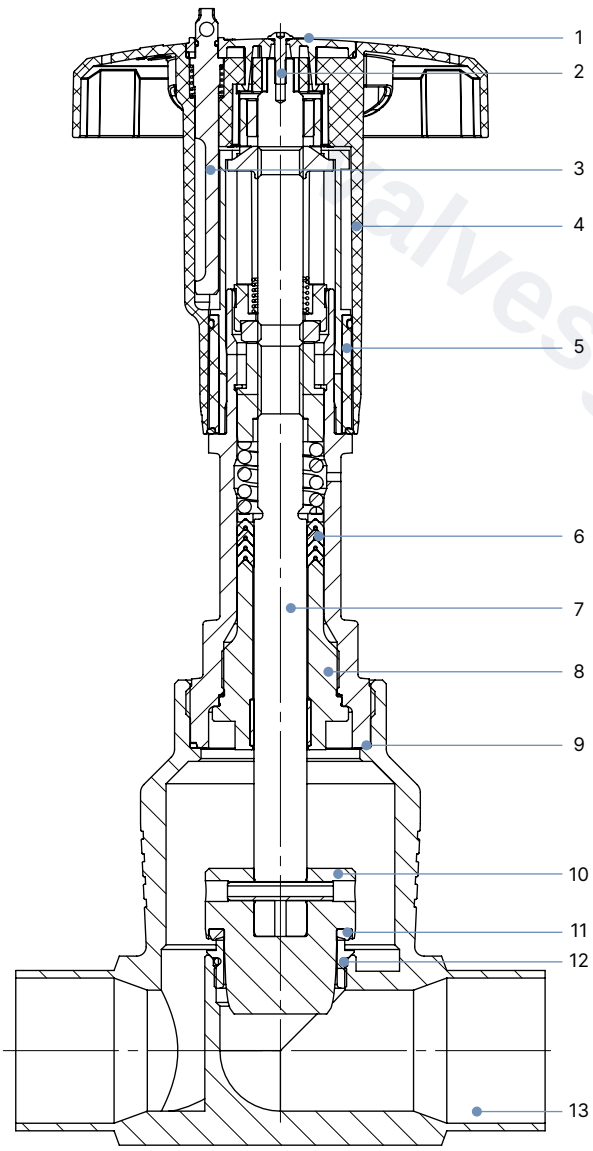

Nr.	Element	Werkstoff
1	Cover	Polyamide (PA)
2	Screw	Stainless steel 1.4301
3	Locking device	Stainless steel 1.4305
4	Handwheel	Polyphenylene sulphide (PPS)
5	Visual position indicator with scale	Polyamide (PA)
6	Packing gland	PTFE V-rings (filled), with spring compensation
7	Stem	Stainless steel 1.4401 or 1.4404
8	Spindle guide	Stainless steel 1.4404 (316L), PTFE filled
9	Housing seal	Graphite
10	Control cone	1.4571 (optionally hardened)
11	Seat seal (optional)	PTFE or PEEK
12	Valve seat with O-ring	Stainless steel 1.4571, EPDM
13	Valve body	Stainless steel 316L/CF3M

DTS 1000597490 EN Version: H Status: RL (released | freigegeben | valide) printed: 28.07.2026

valvesgo.com

4. Dimensions

4.1. Actuator

Note:
Dimensions in mm, unless otherwise stated

Handwheel diameter 45 mm (S)	Handwheel diameter 110 mm (M) and 160 mm (L)
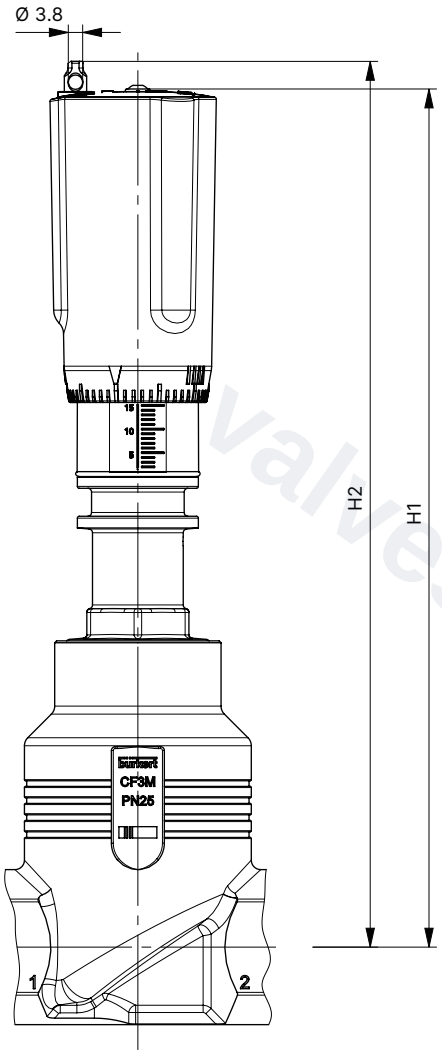	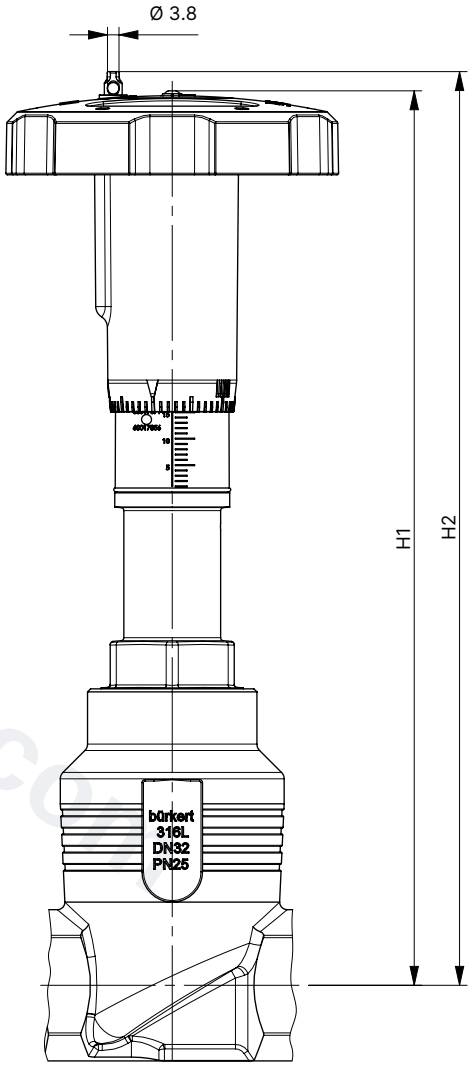

Nominal connection size (pipe)		Handwheel diameter Ø	H1	H2 (locking)
[DN]	[NPS]	[mm]		
15	½	45 (S)	217	224
20	¾	45 (S)	224	230
25	1	45 (S)	228	234
32	1 ¼	110 (M)	296	303
40	1 ½	110 (M)	301	307
50	2	110 (M)	307	313
65	2 ½	160 (L)	361	368
80	3	160 (L)	369	375
100	4	160 (L)	379	385

DTS 1000597490 EN Version: H Status: RL (released | freigegeben | valide) printed: 28.07.2026

valvesgo.com

4.2. Body with flange connection

Note:
Dimensions in mm, unless otherwise stated

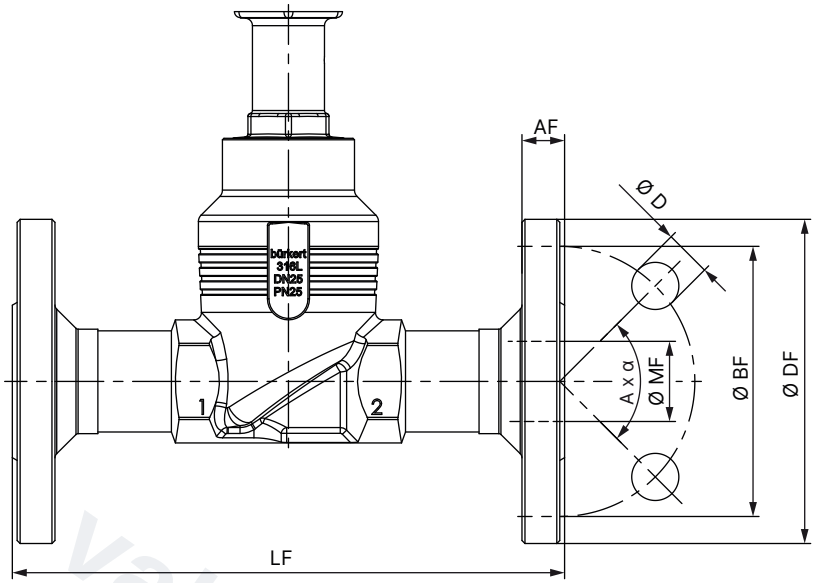

Nominal diameter (port connection)	DIN EN 1092 - 1 PN 25 FTF 1 according to DIN EN 558 - 1							JIS 10K FTF 10 according to DIN EN 558 - 2						
DN	Ø DF	LF	Ø BF	AF	Ø D	A x α	Ø MF	Ø DF	LF	Ø BF	AF	Ø D	A x α	Ø MF
10	90	130	60	16	14	4 × 90°	13.6	–	–	–	–	–	–	–
15	95	130	65	16	14	4 × 90°	18.1	95	108	70	12	15	4 × 90°	18.1
20	105	150	75	18	14	4 × 90°	23.7	100	117	75	14	15	4 × 90°	23.7
25	115	160	85	18	14	4 × 90°	29.7	125	127	90	14	19	4 × 90°	29.7
32	140	180	100	18	18	4 × 90°	38.4	135	140	100	16	19	4 × 90°	38.4
40	150	200	110	18	18	4 × 90°	44.3	140	165	105	16	19	4 × 90°	44.3
50	165	230	125	20	18	4 × 90°	56.3	155	203	120	16	19	4 × 90°	56.3
65	185	290	145	22	18	8 × 45°	66.0	175	216	140	18	19	4 × 90°	71.5
80	200	310	160	24	18	8 × 45°	81.0	185	241	150	18	19	8 × 45°	84.3
100	235	350	190	24	22	8 × 45°	100.0	210	292	175	18	19	8 × 45°	109.1

Nominal diameter (port connection)	ANSI B 16.5 Class 150 FTF 37 according to DIN EN 558 - 2						
NPS	Ø DF	LF	Ø BF	AF	Ø D	A x α	Ø MF
½	89	184	60.5	11.2	15.7	4 × 90°	15.7
¾	99	184	69.9	12.7	15.7	4 × 90°	20.8
1	108	184	79.2	14.2	15.7	4 × 90°	26.7
1½	127	222	98.6	17.5	15.7	4 × 90°	40.9
2	152	254	120.7	19.1	19.1	4 × 90°	52.6
2½	178	276	139.7	22.3	19.1	4 × 90°	62.7
3	190	298	152.5	23.9	19.1	4 × 90°	78.0
4	229	352	190.5	23.9	19.1	8 × 45°	102.4

DTS 1000597490 EN Version: H Status: RL (released | freigegeben | valide) printed: 28.07.2026

valvesgo.com

4.3. Body with threaded connection

Note:
Dimensions in mm, unless otherwise stated

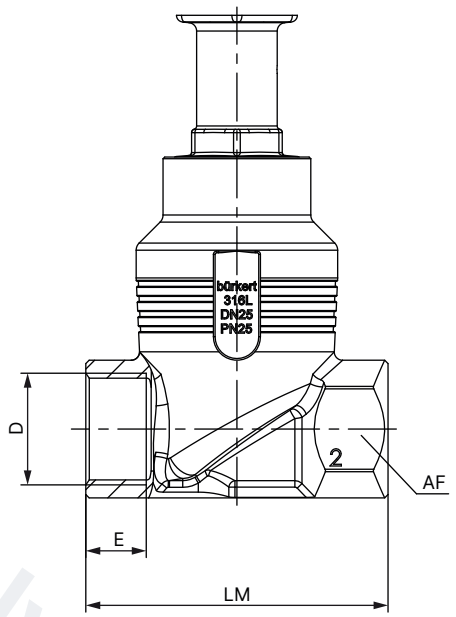

Nominal diameter (port connection)	G (DIN ISO 228 - 1) NPT (ASME B1.20.1) RC (ISO 7 - 1)					
	D	E			LM	AF
DN	NPS	[G]	[NPT]	[Rc]		
10	⅜	12	10.3	10.1	65	27
15	½	14	13.7	13.2	65	27
20	¾	16	14	14.5	75	34
25	1	18	16.8	16.8	90	41
32	1¼	20	17.3	19.1	110	50
40	1½	22	17.3	19.1	120	55
50	2	24	17.6	23.4	150	70
65	2½	26	23.7	26.7	185	85
80	3	28	30.5	29.8	205	100
100	4	32	33	35.8	240	125

DTS 1000597490 EN Version: H Status: RL (released | freigegeben | valide) printed: 28.07.2026

valvesgo.com

4.4. Body with welded connection

Note:
Dimensions in mm, unless otherwise stated

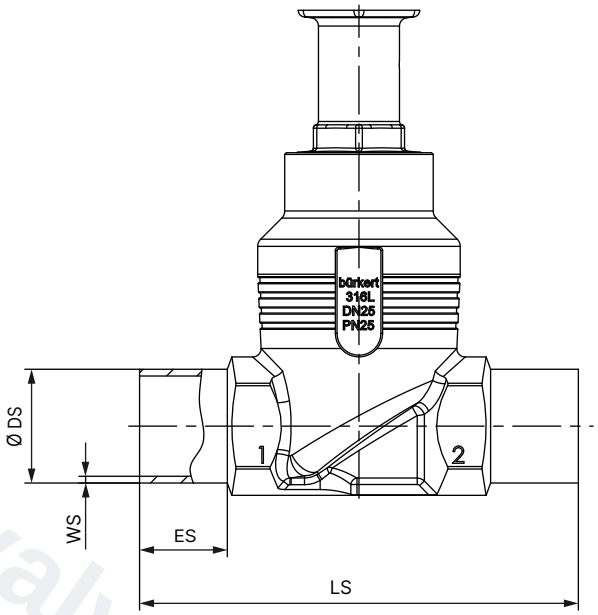

Nominal diameter (port connection)	ES	LS	DIN EN ISO 1127 / ISO 4200 / DIN 11866 series B		DIN 11850 - 2 / DIN 11866 series A / DIN EN 10357 series A	
DN			Ø DS	WS	Ø DS	WS
10	20	90	17.2	1.6	13	1.5
15	20	90	21.3	1.6	19	1.5
20	20	100	26.9	1.6	23	1.5
25	26	130	33.7	2.0	29	1.5
32	26	140	42.4	2.0	35	1.5
40	26	150	48.3	2.0	41	1.5
50	26	175	60.3	2.0	53	1.5
65	26	210	76.1	2.3	70	2.0
80	26	230	88.9	2.3	85	2.0
100	26	260	114.3	2.6	104	2.0

Nominal diameter (port connection)	ES	LS	ASME BPE / DIN 11866 series C	
NPS			Ø DS	WS
½	20	90	12.7	1.65
¾	20	90	19.05	1.65
1	20	100	25.4	1.65
1½	26	140	38.1	1.65
2	26	150	50.8	1.65
2½	26	175	63.5	1.65
3	26	210	76.2	1.65
4	26	260	101.6	2.11

DTS 1000597490 EN Version: H Status: RL (released | freigegeben | valide) printed: 28.07.2026

valvesgo.com

4.5. Body with clamp connection

Note:
Dimensions in mm, unless otherwise stated

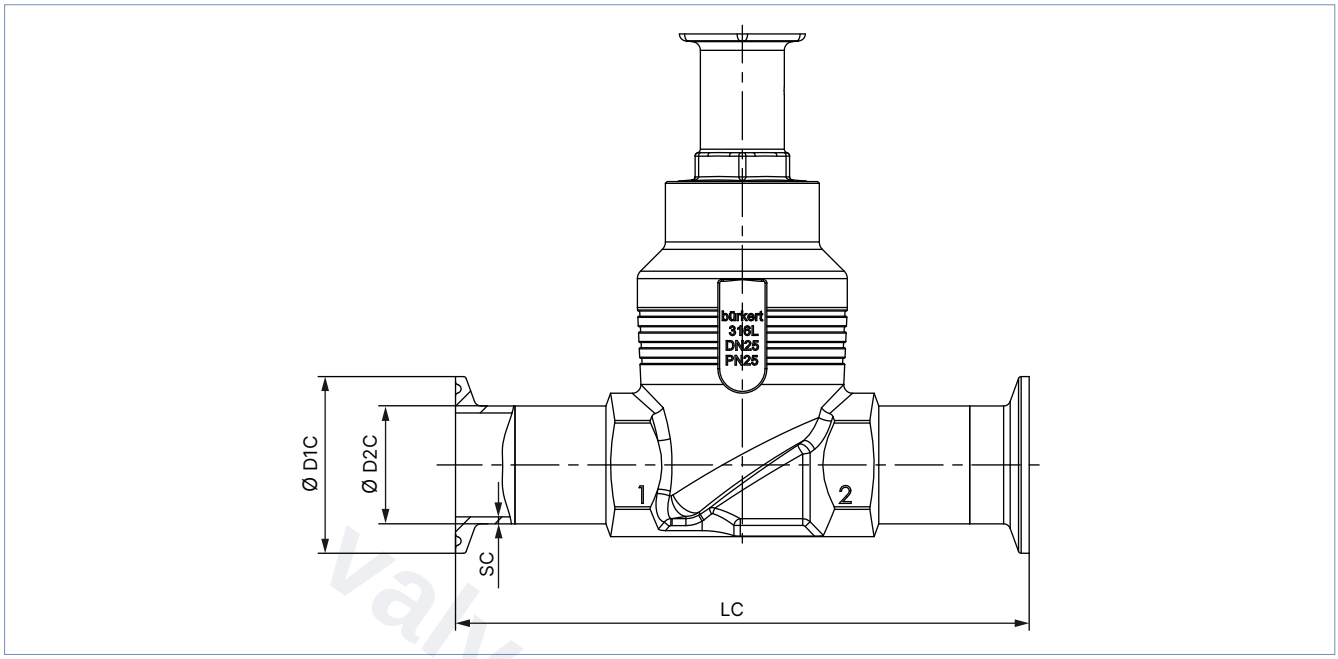

Nominal diameter (port connection)	DIN 32676 A (Rohr: DIN 11850 - 2)				DIN 32676 B (Rohr: ISO 4200)			
DN	LC	Ø D2 C	Ø D1 C	SC	LC	Ø D2 C	Ø D1 C	SC
15	126	19	34	1.5	146	21.3	50.5	1.6
20	136	23	34	1.5	136	26.9	50.5	1.6
25	173	29	50.5	1.5	164	33.7	50.5	2.0
40	193	41	50.5	1.5	193	48.3	64.0	2.0
50	218	53	64	1.5	218	60.3	77.5	2.0

Nominal diameter (port connection)	ASME BPE			
NPS	LC	Ø D2 C	Ø D1 C	SC
½	122	12.7	25.0	1.65
¾	126	19.05	25.0	1.65
1	126	25.4	50.5	1.65
1½	172	38.1	50.5	1.65
2	182	50.8	64.0	1.65
2½	231	63.5	77.5	1.65
3	265	76.2	91.0	1.65
4	315	101.6	119.0	2.11

DTS 1000597490 EN Version: H Status: RL (released | freigegeben | valide) printed: 28.07.2026

valvesgo.com

5. Performance specifications

5.1. Fluidic data

Flow characteristics

- Flow characteristic according to DIN EN 60534 - 2 - 4
- K_{VR} value at 5 % of stroke for DN > 10 mm
  K_{VR} value at 10 % of stroke for DN ≤ 10 mm
- K_{VR} value = smallest K_V value, at which the tilt tolerance according to DIN EN 60534 - 2 - 4 is still maintained.

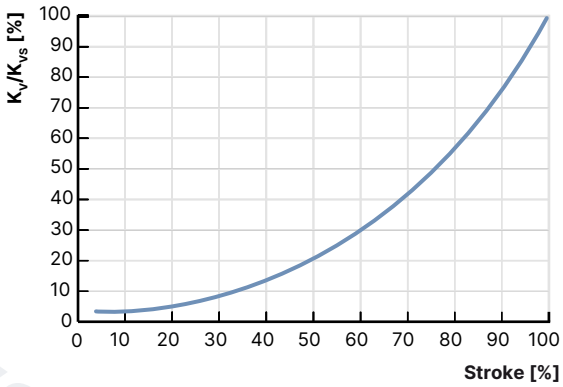

Equal percentage flow curve - detailed values please see below

valvesgo.com

DTS 1000597490 EN Version: H Status: RL (released | freigegeben | valide) printed: 28.07.2026

valvesgo.com

Overview of fluidic data for flow below seat (for liquids, steam and gases)

Note:

- K_V value [m³/h]: measurement with water according to DIN EN 60534 - 2 - 4
- Seat leakage according to DIN EN 60534 - 4
- Bürkert product filter(see "7.2. Bürkert product filter" on page 19)
- Info: Rules for decimal places implemented according to works standard

Nominal diameter (pipe)		Seat size	Hand-wheel dia-meter Ø	Operating pressure max. CF A (Seat leakage class)			Theo-retical range-ability	K_V value at stroke [m³/h]											K_{VS} value
				Seat seal															
				Stain-less steel	PTFE	PEEK													
DN	NPS		[mm]	[bar(g)]				5 %	10 %	20 %	30 %	40 %	50 %	60 %	70 %	80 %	90 %	100 %	[m³/h]
10	⅜ 1.)	3	45 (S)	25 (II)	–	–	20:1	–	0.005	0.009	0.013	0.019	0.026	0.034	0.044	0.060	0.077	0.098	0.1
		3	45 (S)	25 (II)			20:1	–	0.009	0.015	0.023	0.033	0.046	0.063	0.085	0.11	0.16	0.22	0.2
		4	45 (S)	25 (II)			30:1	–	0.023	0.033	0.049	0.070	0.097	0.14	0.18	0.26	0.35	0.49	0.5
		6	45 (S)	25 (II)	25 (VI)	25 (VI)	50:1	0.005	0.007	0.011	0.045	0.085	0.16	0.26	0.41	0.65	1.1	1.25	1.25
		8	45 (S)	25 (II)	25 (VI)	25 (VI)		0.060	0.070	0.090	0.12	0.18	0.26	0.42	0.61	0.92	1.5	2.0	2.0
		10	45 (S)	25 (II)	25 (VI)	25 (VI)		0.090	0.11	0.13	0.19	0.30	0.48	0.73	1.0	1.6	2.3	2.7	2.7
15	½ 2.)	3	45 (S)	25 (II)	–	–	20:1	–	0.005	0.009	0.013	0.019	0.026	0.034	0.044	0.060	0.077	0.098	0.1
		3	45 (S)	25 (II)			20:1	–	0.009	0.015	0.023	0.033	0.046	0.063	0.085	0.11	0.16	0.22	0.2
		4	45 (S)	25 (II)			30:1	–	0.023	0.033	0.049	0.070	0.097	0.14	0.18	0.26	0.35	0.49	0.5
		6	45 (S)	25 (II)	25 (VI)	25 (VI)	50:1	0.005	0.007	0.011	0.045	0.085	0.16	0.26	0.41	0.65	1.1	1.25	1.25
		8	45 (S)	25 (II)	25 (VI)	25 (VI)		0.070	0.080	0.11	0.13	0.19	0.27	0.43	0.63	0.95	1.6	2.1	2.1
		10	45 (S)	25 (II)	25 (VI)	25 (VI)		0.090	0.11	0.15	0.19	0.31	0.49	0.75	1.1	1.7	2.5	3.1	3.1
		15	45 (S)	25 (II)	25 (VI)	25 (VI)		0.14	0.17	0.22	0.35	0.52	0.80	1.2	1.8	2.7	3.7	4.3	4.3
20	¾ 2.)	10	45 (S)	25 (II)	25 (VI)	25 (VI)	50:1	0.10	0.12	0.15	0.19	0.30	0.46	0.67	1.0	1.5	2.1	2.8	2.8
		15	45 (S)	25 (II)	25 (VI)	25 (VI)		0.13	0.17	0.21	0.32	0.48	0.71	1.0	1.5	2.3	3.4	4.4	4.4
		20	45 (S)	25 (II)	25 (VI)	25 (VI)		0.19	0.24	0.29	0.42	0.64	0.97	1.4	2.0	2.9	4.2	5.9	5.9

1.) Deviation for port connections according to ASME BPE: the next largest Nominal diameter (port connection) is used, e.g. NPS 1 instead of NPS ¾.
2.) According to the Pressure Equipment Directive 97/23/EC for compressible fluids of Group 1 (hazardous gases and vapours according to Article 3 No. 1.3 letter a first dash)

DTS 1000597490 EN Version: H Status: RL (released | freigegeben | valide) printed: 28.07.2026

valvesgo.com

Nominal diameter (pipe)		Seat size	Hand-wheel dia-meter Ø	Operating pressure max. CF A (Seat leakage class)			Theo-retical range-ability	K_V value at stroke [m³/h]											K_{VS} value
				Seat seal															
				Stain-less steel	PTFE	PEEK													
DN	NPS		[mm]	[bar(g)]				5 %	10 %	20 %	30 %	40 %	50 %	60 %	70 %	80 %	90 %	100 %	[m³/h]
25	1	3	45 (S)	25 (II)	–	–	20:1	–	0.005	0.009	0.013	0.019	0.026	0.034	0.044	0.060	0.077	0.098	0.1
		3	45 (S)	25 (II)	–	–	20:1	–	0.009	0.015	0.023	0.033	0.046	0.063	0.085	0.11	0.16	0.22	0.2
		4	45 (S)	25 (II)	–	–	30:1	–	0.023	0.033	0.049	0.070	0.097	0.14	0.18	0.26	0.35	0.49	0.5
		6	45 (S)	25 (II)	25 (VI)	25 (VI)	50:1	0.005	0.007	0.011	0.045	0.085	0.16	0.26	0.41	0.65	1.1	1.25	1.25
		8	45 (S)	25 (II)	25 (VI)	25 (VI)		0.070	0.080	0.11	0.13	0.19	0.27	0.43	0.63	0.95	1.6	1.8	1.8
		10	45 (S)	25 (II)	25 (VI)	25 (VI)		0.10	0.12	0.15	0.19	0.30	0.46	0.67	1.0	1.5	2.1	2.8	2.8
		15	45 (S)	25 (II)	25 (VI)	25 (VI)		0.13	0.17	0.21	0.33	0.48	0.72	1.1	1.5	2.4	3.5	4.6	4.6
		20	45 (S)	25 (II)	25 (VI)	25 (VI)		0.19	0.24	0.30	0.44	0.64	0.98	1.4	2.1	3.2	4.5	6.1	6.1
		25	45 (S)	-	25 (VI)	25 (VI)		0.33	0.38	0.62	0.94	1.4	2.0	3.0	4.4	6.1	8.1	10.4	10.4
32	1 ¼ [2.)]	20	110 (M)	25 (II)	25 (VI)	25 (VI)		0.22	0.25	0.35	0.50	0.70	1.1	1.6	2.5	3.8	5.8	8.0	8.0
		25	110 (M)	25 (II)	25 (VI)	25 (VI)		0.40	0.47	0.73	1.1	1.6	2.5	3.7	5.4	7.5	10.3	13.0	13.0
		32	110 (M)	25 (II)	25 (VI)	25 (VI)		0.48	0.60	0.85	1.3	2.1	3.1	4.5	6.8	10.2	14.0	17.8	17.8
40	1 ½ [2.)]	25	110 (M)	25 (II)	25 (VI)	25 (VI)		0.40	0.50	0.75	1.1	1.7	2.6	3.8	5.6	8.0	10.7	13.6	13.6
		32	110 (M)	25 (II)	25 (VI)	25 (VI)		0.48	0.60	0.85	1.3	2.1	3.2	4.6	6.9	11.0	15.0	20.0	20.0
		40	110 (M)	25 (II)	25 (VI)	25 (VI)		0.60	0.70	1.1	1.7	2.7	4.0	6.0	9.2	13.8	18.2	23.8	24.0
50	2 [2.)]	20	110 (M)	25 (20) (II) [1.)]	–	–		–	0.14	0.25	0.38	0.57	0.85	1.3	1.9	2.8	4.1	6.0	6.3
		32	110 (M)	25 (20) (II) [1.)]	–	–		0.24	0.31	0.51	0.76	1.1	1.7	2.5	3.6	5.3	7.9	11.8	12.0
		32	110 (M)	25 (20) (II) [1.)]	25 (20) (VI) [1.)]	25 (20) (VI) [1.)]		0.48	0.60	0.90	1.3	2.1	3.2	4.6	6.9	11.6	16.0	21.0	21.0
		40	110 (M)	25 (20) (II) [1.)]	25 (20) (VI) [1.)]	25 (20) (VI) [1.)]		0.60	0.70	1.0	1.7	2.6	4.0	5.9	9.2	14.0	18.9	24.5	24.5
		50	110 (M)	25 (20) (II) [1.)]	25 (20) (VI) [1.)]	20 (VI) [1.)]		0.90	1.1	1.9	2.9	4.5	6.8	10.5	15.5	22.0	29.5	37.0	37.0
65	2 ½ [2.)]	40	160 (L)	25 (15) (II) [1.)]	25 (15) (VI) [1.)]	25 (15) (IV) [1.)]		0.65	0.75	1.1	1.8	2.8	4.3	6.5	10.4	16.0	22.0	29.0	29.0
		50	160 (L)	25 (15) (II) [1.)]	25 (15) (VI) [1.)]	20 (VI) [1.)]		1.0	1.2	2.0	3.1	4.8	6.7	9.7	16.0	24.0	35.0	45.0	45.0
		65	160 (L)	24 (15) (II) [1.)]	24 (15) (VI) [1.)]	14 (VI)		1.6	2.0	3.0	5.0	8.0	13.5	22.0	33.0	45.0	56	65	65

DTS 1000597490 EN Version: H Status: RL (released | freigegeben | valide) printed: 28.07.2026

valvesgo.com

Nominal diameter (pipe)		Seat size	Hand-wheel dia-meter Ø	Operating pressure max. CF A (Seat leakage class)			Theo-retical range-ability	K_V value at stroke [m³/h]											K_{VS} value
				Seat seal															
				Stain-less steel	PTFE	PEEK													
DN	NPS		[mm]	[bar(g)]				5 %	10 %	20 %	30 %	40 %	50 %	60 %	70 %	80 %	90 %	100 %	[m³/h]
80	3 [2.)]	50	160 (L)	25 (12.5) (II) [1.)]	25 (12.5) (VI) [1.)]	20 (VI) [1.)]	50:1	1.0	1.2	2.0	3.4	5.3	8.3	13.0	19.0	26.0	35.0	45.0	45.0
		65	160 (L)	24 (12.5) (II) [1.)]	24 (12.5) (VI) [1.)]	14 (12.5*) (VI)		1.6	2.0	2.9	5.0	8.2	13.0	22.0	35.0	48.0	61	73	73
		80	160 (L)	16 (12.5) (II) [1.)]	16 (12.5) (VI) [1.)]	10 (VI)		2.5	3.4	6.3	10.7	16.0	27.0	42.5	58	73	87	100	100
100	4	65	160 (L)	24 (10) (II) [1.)]	24 (10) (VI) [1.)]	14 (10) (VI) [1.)]		1.4	1.8	2.8	5.0	8.8	15.0	25.0	37.0	50	64	77	77
		80	160 (L)	16 (10) (II) [1.)]	16 (10) (VI) [1.)]	10 (VI)		2.2	3.1	5.9	10.3	17.5	30.0	48.0	66	82	97	110	110
		100	160 (L)	10 (II)	10 (VI)	6 (VI)		3.8	5.2	9.5	15.0	26.0	46.5	68	90	111	128	140	140

1.) According to the Pressure Equipment Directive 97/23/EC for compressible fluids of Group 1 (hazardous gases and vapours according to Article 3 No. 1.3 letter a first dash)
2.) Deviation for port connections according to ASME BPE: the next largest Nominal diameter (port connection) is used, e.g. NPS 1 instead of NPS ¾.

DTS 1000597490 EN Version: H Status: RL (released | freigegeben | valide) printed: 28.07.2026

valvesgo.com

valvesgo.com

5.2. Operating limits

Operating limits for medium temperature and operating pressure

In addition to the maximum operating pressures, the operating range of Bürkert process valves is limited by the nominal pressure according to the relevant standard.

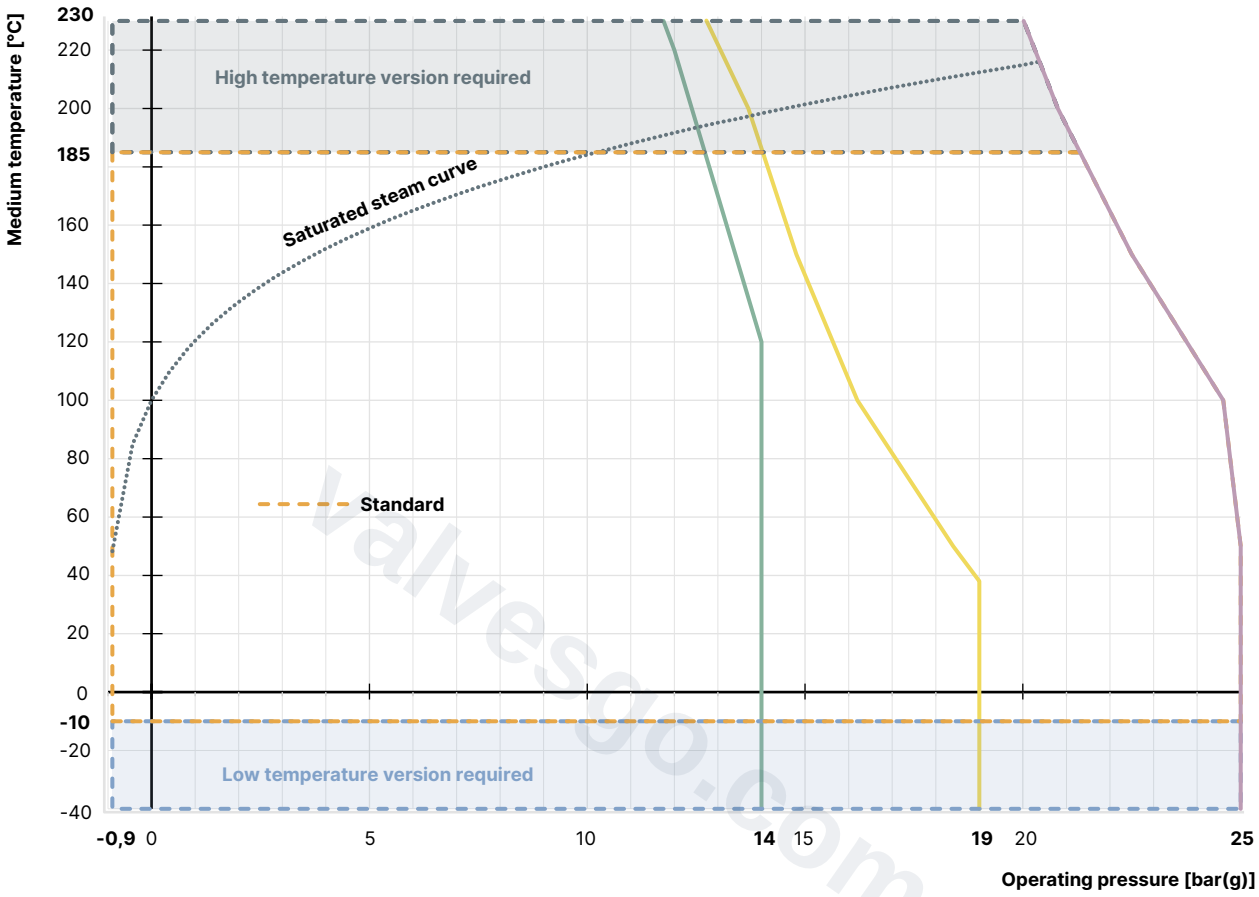

Operating limits for PN25 according to DIN EN 12516-1
Operating limits for flange 10K according to JIS B 2220
Operating limits for Class 150 according to ASME B16.34
Saturated steam curve for water

DTS 1000597490 EN Version: H Status: RL (released | freigegeben | valide) printed: 28.07.2026

valvesgo.com

Operating limits for seat seal

Tight sealing required	Leakage class (DIN EN 60534 - 4)	Medium temperature	Seat seal
No An additional shut-off valve is recommended	II (metal seals) Metal-sealed valves have larger leakages (0.5 % of the nominal flow rate are permissible). Metallic seals are impervious even under demanding process conditions, but can wear more quickly with manually operated drives due to the rotating spindle when closing.	- 40 °C...+ 230 °C	Stainless steel
Yes An additional shut-off valve is often unnecessary.	VI (soft seals) By using plastics as sealing material, the control valves can close tightly. Their use is not recommended in cases of increased erosion due to demanding process conditions.	- 40 °C...+ 130 °C (recommended for ≤ + 130 °C)	PTFE
		- 10 °C...+ 230 °C (recommended for > + 130 °C)	PEEK

Operating limits for optional variants

High-temperature variant
Thanks to an adaption of the packing gland, this variant is suitable for applications with steam, neutral gases and other heat transfer mediums up to + 230 °C.

Water variant
For applications with water up to + 200 °C, a special configuration of the packing gland increases service life significantly. It is recommended for water temperatures starting at + 85 °C.

Drinking water variant
Wetted materials are tested in contact with the medium are tested for suitability with drinking water up to + 85 °C.

Low-temperature variant
Suitable for minimum medium temperatures down to - 40 °C

DTS 1000597490 EN Version: H Status: RL (released | freigegeben | valide) printed: 28.07.2026

valvesgo.com

6. Product design and assembly

6.1. Product features

Note
Further information can be found in the **operating instructions Type 2961** ▶.

Position indicator	
When turning the handwheel counterclockwise, the reproducible stroke scale becomes visible between the attachment and the handwheel. The scale on the handwheel, together with the stroke scale, enables reproducible adjustment of the flow rate.	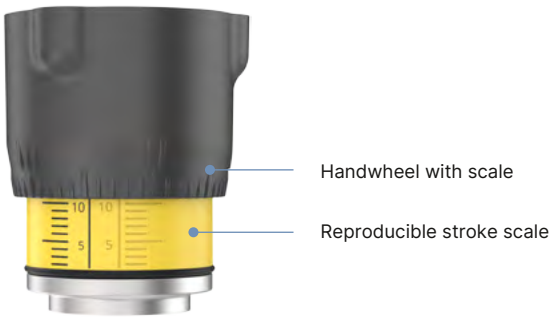
Interlock (optional)	
The valve can be secured against unintentional or unauthorized operation. For this purpose, a securing pin can be pressed down and turned. The locking pin has a hole (Ø 3.8) and can be secured with a padlock.	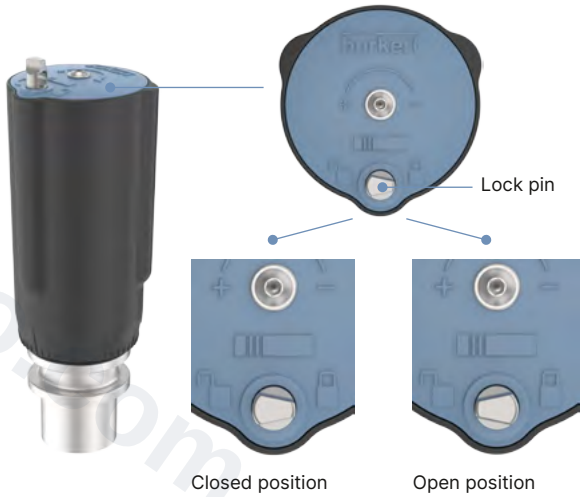
Stroke limitation (optional)	
Both the minimum and the maximum position of the valve can be adjusted via an adjustment sleeve. The handwheel can be removed for this purpose.	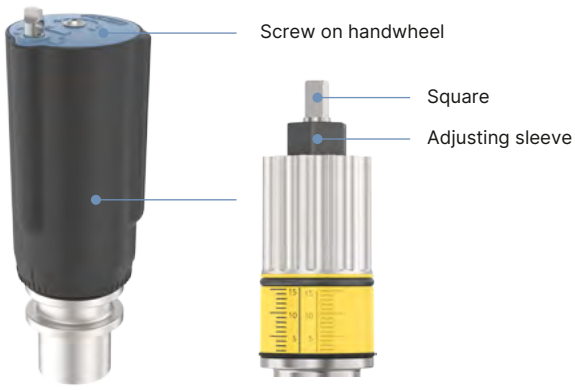

DTS 1000597490 EN Version: H Status: RL (released | freigegeben | valide) printed: 28.07.2026

valvesgo.com

7. Ordering information

7.1. Bürkert eShop

Bürkert eShop – Easy ordering and quick delivery

You want to find your desired Bürkert product or spare part quickly and order directly? Our online shop is available for you 24/7. Sign up and enjoy all the benefits.

Order online now

7.2. Bürkert product filter

Bürkert product filter – Get quickly to the right product

You want to select products comfortably based on your technical requirements?
Use the Bürkert product filter and find suitable articles for your application quickly and easily.

Try out our product filter

7.3. Bürkert Product Enquiry Form

Note:
Please see our Product Enquiry Form for a full explanation of our specification key.

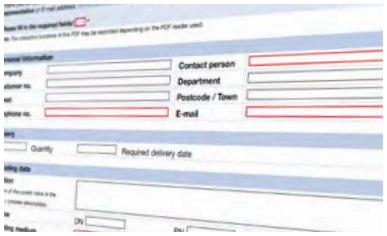

Bürkert Product Enquiry Form – Your enquiry quickly and compactly

Would you like to make a specific product enquiry based on your technical requirements? Use our Product Enquiry Form for this purpose. There you will find all the relevant information for your Bürkert contact. This will enable us to provide you with the best possible advice.

Fill out the form now

7.4. Ordering chart accessories

Standard accessories

Description	Article no.
4 Lock, 3 mm Shackle Nylon Lockout	93719475

DTS 1000597490 EN Version: H Status: RL (released | freigegeben | valide) printed: 28.07.2026

valvesgo.com