bürkert
FLUID CONTROL SYSTEMS

Electromotive 2/2-way globe valve (on/off)

- Safety position via energy storage
- Rapid flow shut off
- Weather and impact resistant design
- Hygienically designed surface
- Versatile diagnostic options

Product variants described in the data sheet may differ from the product presentation and description.

Can be combined with

Type ME61
EDIP process display

Type ME63
Industrial Ethernet gateway, IP65/IP67/IP69k

Type ME43
Fieldbus gateway

Type 8008
Flow meter for gases with calorimetric measuring

Type 8098
FLOWave SAW flowmeter

Type description

The innovative Bürkert process on/off valve Type 3321 is the solution when it comes to shut-off tasks under demanding operating conditions. The electromotive actuator of the globe valve with ball screw moves the swivel plate to the desired end position at a particularly high speed up to 6 mm/s. Thereby it reacts almost instantaneously to process signals. If necessary, the safety position can be approached by an optional energy storage in case of power failure. The electromotive actuator and shut-off valve are adapted perfectly to each other with closed design and robust surface. This ensures the hygienic requirements of fast and residue-free cleaning. Harsh ambient conditions are no problem for the electromotive globe valve Type 3321 due to the degree of protection IP65/IP67 and the high impact and vibration resistance. Thanks to the tried-and-tested, self-adjusting packing gland with exchangeable V-seals, the globe valve achieves maximum service life and tightness.The fieldbus-compatible Type 3321 shut-off valve offers, which is compatible for fieldbuses, offers the operator many helpful functions for process monitoring, valve diagnostics and preventive maintenance and thus the decisive advantage of modern process automation.

DTS 1000295570 EN Version: - Status: RL (released | freigegeben | valide) printed: 06.10.2026

© Christian Bürkert GmbH & Co. KG, Subject to alteration

valvesgo.com

Table of contents

1. General technical data 4

2. Approvals and conformities 6

2.1. General notes 6
2.2. Conformity 6
2.3. Standards 6
2.4. Explosion protection 6
2.5. North America (USA/Canada) 6
2.6. Drinking water 6
2.7. Foods and beverages/Hygiene 7
2.8. Others 7
Oxygen 7
TA Luft 7

3. Materials 8

3.1. Bürkert resistApp 8
3.2. Material specifications 8

4. Dimensions 10

4.1. Actuator 10
AG2 10
AG3 12
4.2. Body with flange connection 14
4.3. Body with threaded connection 15
4.4. Body with welded connection 16
4.5. Body with clamp connection 17

5. Product connections 18

5.1. Electrical connection 18
Description of circular plug-in connectors 18
Circular plug-in connector with pin assignment 20

6. Performance specifications 21

6.1. Fluidic data 21
Overview of flow characteristics with flow below seat 21
6.2. Operating limits 22
Operating limits for medium temperature and operating pressure 22
Operating limits for ambient and medium temperature 23
Operating limits for seat seal 24
Operating limits for optional variants 24
6.3. Electrical control and interfaces 25
Interface diagram 25

7. Product design and assembly 26

7.1. Product features 26
7.2. Product assembly 28
Design of the electromotive valve Type 3321 AG2 28
Design of the electromotive valve Type 3321 AG3 29

DTS 1000295570 EN Version: - Status: RL (released | freigegeben | valide) printed: 06.10.2026

valvesgo.com

valvesgo.com

8. Ordering information **30**

8.1. Bürkert eShop 30
8.2. Bürkert product filter 30
8.3. Bürkert Product Enquiry Form 30
8.4. Ordering chart accessories 31
Standard accessories 31
Connection cable 31
büS interface 31

DTS 1000295570 EN Version: - Status: RL (released | freigegeben | valide) printed: 06.10.2026

valvesgo.com

valvesgo.com

1. General technical data

Note:

- AG2: actuator size 2 with a nominal force of 1300 or 2500 N for seat size 15...50
- AG3: actuator size 3 with a nominal force of 7700 or 10000 N for seat size 40...100

Product properties	
Dimensions	Further information can be found in chapter "4. Dimensions" on page 10.
Material	Further information can be found in chapter "3. Materials" on page 8.
Design	Globe on/off valve
Nominal diameter (port connection)	DN 15...DN 100, NPS ½...4
Safety setting in case of power failure	With energy storage SAFEPOS energy-pack: open, closed or freely programmable position Without energy storage SAFEPOS energy-pack: blocked in last position
Flow direction	Against closing direction (below seat)
Weight	Depending on actuator variant up to: AG2: 5.5 kg AG3: 16 kg (Total weight including valve body depending on port connection)
Performance data	
Operating pressure	0...25 bar(g) (see "6.1. Fluidic data" on page 21) Vacuum variant...- 0.9 bar(g) (optional)
Nominal pressure	PN 25 (DIN EN 1333), Class 150 (DIN EN 1759)
Seat leakage	Leakage rate A (DIN EN 12266 - 1), seat seal PTFE and PEEK, test medium air
K_V value	4.7...165 m^3/h (see "6.1. Fluidic data" on page 21)
Closing time [1.)]	AG2: 2.3...6.6 s AG3: 8.7 s (Depending on travel speed, stroke and operating conditions)
Travel speed [1.)]	6 mm/s (for AG2 actuator force 1300 N) 4 mm/s (for AG2 actuator force 2500 N) 3 mm/s (for AG3 actuator force 7700 N and 10000 N) (Depending on operating conditions)
Electrical data	
Operating voltage	24 V DC ± 10 % (maximum residual ripple 10 %)
Operating current [1.)]	AG2: maximum 3 A (at maximum load and including 1 A charging current of the optional energy storage SAFEPOS energy-pack). At minimum operating temperature additionally 2 A AG3: maximum 5 A (at maximum load and including charging current of the optional energy storage SAFEPOS energy-pack). At minimum operating temperature additionally 6 A
Protection class (DIN EN 61140)	III
Duty cycle	100 %
Standby consumption [1.)]	2...4 W
Communication and control	
Standard signal (binary)	0...5 V (log „0") 10...30 V (log „1")
Fieldbus (digital)	Bürkert system bus (büS) (standard) CANopen (optional) EtherNet/IP, PROFINET, Modbus TCP, EtherCAT (optional via integrated gateway)
Medium data	
Operating medium	Steam, neutral gases, water, alcohols, oils, fuels, hydraulic fluids, salt solutions, lyes, organic solvents, oxygen (optional)
Medium temperature	- 40 °C...+ 230 °C (see "6.2. Operating limits" on page 22)
Viscosity	Up to 600 mm^2/s

DTS 1000295570 EN Version: - Status: RL (released | freigegeben | valide) printed: 06.10.2026

valvesgo.com

Product connections	
Port connection [2.)]	
Welded connection	DIN EN ISO 1127 / ISO 4200 / DIN 11866 series B DIN 11850 - 2 / DIN 11866 series A ASME BPE / DIN 11866 series C SMS 3008
Clamp connection	DIN 32676 series B (pipe: ISO 4200) DIN 32676 series A (pipe: DIN 11850 - 2) ASME BPE
Threaded connection	G (DIN ISO 228 - 1) NPT (ASME B1.20.1) RC (ISO 7 - 1)
Flange connection	DIN EN 1092 - 1 ANSI B 16.5 JIS 10K
Electrical connection	
Actuator	Terminal strip with cable bushing, 2 x M20 (only AG2) or 2 x M12 circular plugs, 5-pin and 8-pin
Fieldbus gateway	2 x M12 circular sockets, 4-pin (only with Industrial Ethernet) Further information can be found in chapter **"5. Product connections" on page 18**.
Approvals and conformities	
Further information can be found in chapter **"2. Approvals and conformities" on page 6**.	
Detergent resistance	According to Ecolab test method: F&E/P3-E No. 40 - 1
Environment and installation	
Environmental factors	Protect the device from electromagnetic interference, UV radiation and, when used outdoors, from weather conditions.
Ambient temperature	- 25 °C...+ 65 °C (only without additional modules) (Derating see **"Operating limits for ambient and medium temperature" on page 23**)
Degree of protection	IP65/IP67 (DIN EN 60529), NEMA 4X
Installation position	Any, preferably with actuator upright

1.) All values relate to a supply voltage of 24 V at + 25 °C.
2.) Others are available on request.

DTS 1000295570 EN Version: - Status: RL (released | freigegeben | valide) printed: 06.10.2026

valvesgo.com

2. Approvals and conformities

2.1. General notes

- The approvals and conformities listed below must be stated when making enquiries. This is the only way to ensure that the product complies with all required specifications.
- Not all available variants can be supplied with the below mentioned approvals or conformities.

2.2. Conformity

In accordance with the Declaration of Conformity, the product is compliant with the EU Directives.

2.3. Standards

The applied standards which are used to demonstrate compliance with the EU Directives are listed in the EU-Type Examination Certificate and/or the EU Declaration of Conformity.

2.4. Explosion protection

Approval	Description
	Optional: Explosion protection (valid for the variable code PX48) As a category 3 device suitable for zone 2/22. **ATEX:** BVS 17 ATEX E 117 X II 3G Ex ec IIC T4 Gc II 3D Ex tc IIIC T135 °C Dc **IECEx:** IECEx BVS 17.0100X Ex ec IIC T4 Gc Ex tc IIIC T135 °C Dc

2.5. North America (USA/Canada)

Approval	Description
	Optional: Actuators UL Listed for the USA and Canada (valid for the variable code PU11) The actuators are UL Listed for the USA and Canada according to: • UL 61010-1 (ELECTRICAL EQUIPMENT FOR MEASUREMENT, CONTROL, AND LABORATORY USE – Part 1: General Requirements) • CAN/CSA-C22.2 No. 61010-1

2.6. Drinking water

Conformity	Description
	Optional: Suitable for use in drinking water applications (valid for the variable code PF39) The materials comply with the assessment principles (UBA) for materials in contact with drinking water (TrinkwasserV). PF39: Suitable for products with a maximum temperature of + 85 °C (hot water)

DTS 1000295570 EN Version: - Status: RL (released | freigegeben | valide) printed: 06.10.2026

valvesgo.com

2.7. Foods and beverages/Hygiene

Conformity	Description
FDA	**FDA – Code of Federal Regulations (valid for the variable code PL02, PL03)** All wetted materials are compliant with the Code of Federal Regulations published by the FDA (Food and Drug Administration, USA) according to the manufacturer's declaration.
USP	**United States Pharmacopeial Convention (USP) (valid for the variable code PL04)** All wetted materials are biocompatible according to the manufacturer's declaration.
	EC Regulation 1935/2004 of the European Parliament and of the Council (valid for the variable code PL01, PL02) All wetted materials are compliant with EC Regulation 1935/2004/EC according to the manufacturer's declaration.
	China food GB Standards of the People's Republic of China (valid for the variable code PL10) All wetted materials are compliant with the requirement of China food GB Standards according to the manufacturer's declaration.

2.8. Others

Oxygen

Conformity	Description
O_2	**Optional: Suitability for oxygen (valid for the variable code NL02)** The products are suitable for use with gaseous oxygen, according to the manufacturer's declaration.

TA Luft

Conformity	Description
TA Luft	**Technical instruction on air quality control (valid for the variable code PM01)**

DTS 1000295570 EN Version: - Status: RL (released | freigegeben | valide) printed: 06.10.2026

valvesgo.com

valvesgo.com

3. Materials

3.1. Bürkert resistApp

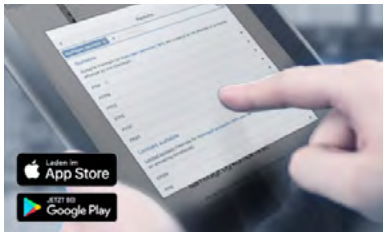

Bürkert resistApp – Chemical resistance chart

You want to ensure the reliability and durability of the materials in your individual application case? Verify your combination of media and materials on our website or in our resistApp.

Start chemical resistance check

3.2. Material specifications

Note:
The Type 3321 globe control valve is supplied with different port connections (flange, thread, welded and clamp connections). These connections are not shown. They are made of the same material as the valve body.

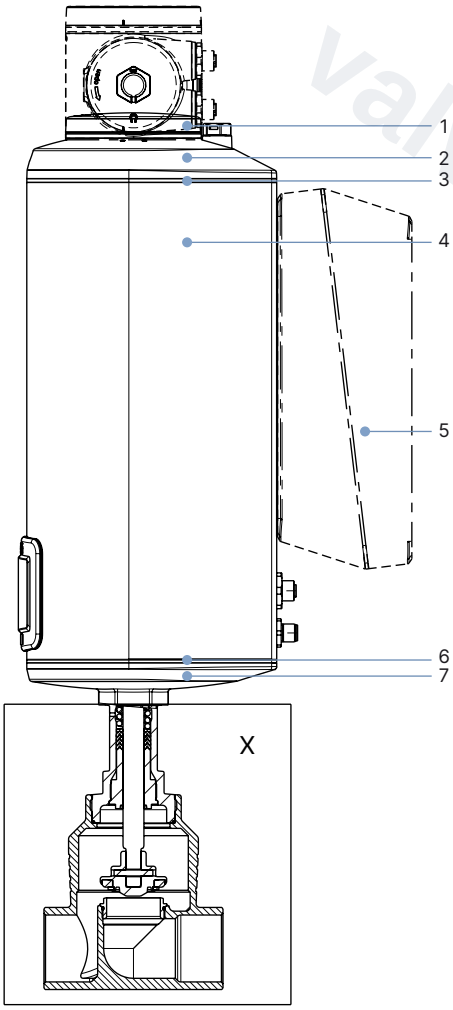

AG2

No.	Component	Material
1	Blind cover/gateway housing	PPS (standard), stainless steel 1.4301 (for ATEX/IECEx)
2	Actuator cover	PPS
3	Seal	EPDM
4	Actuator housing	Powder-coated aluminium
6	Seal	EPDM
7	Actuator base	PPS

AG3

No.	Component	Material
1	Blind cover/gateway housing	PPS (standard), stainless steel 1.4301 (for ATEX/IECEx)
2	Actuator cover	PC
3	Seal	EPDM
4	Actuator housing	Powder-coated aluminium
5	Energy storage SAFEPOS energy-pack housing	PC
6	Seal	EPDM
7	Actuator base	Stainless steel 1.4308

DTS 1000295570 EN Version: - Status: RL (released | freigegeben | valide) printed: 06.10.2026

valvesgo.com

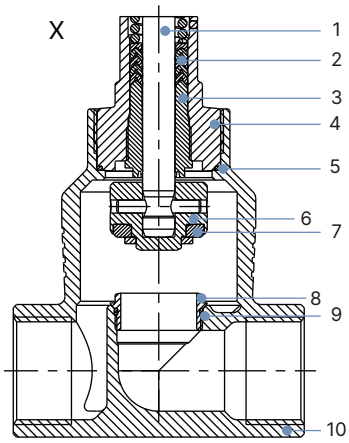

No.	Component	Material
1	Spindle	Stainless steel 1.4401 (316)/1.4404 (316L)
2	Spindle seal	PTFE V-seals (filled) with spring compensation
3	Spindle guide	PEEK or stainless steel 1.4404 (316L)
4	Packing gland tube	Stainless steel 1.4401 (316)
5	Seal valve body	Graphite or PTFE
6	Swivel plate	Stainless steel 1.4571
7	Valve seat seal	PTFE or PEEK seal washer
8	Valve seat	Stainless steel 1.4571
9	O-ring valve seat	EPDM or PTFE
10	Valve body	Stainless steel CF3M

DTS 1000295570 EN Version: - Status: RL (released | freigegeben | valide) printed: 06.10.2026

valvesgo.com

valvesgo.com

4. Dimensions

4.1. Actuator

AG2

Note:
Dimensions in mm, unless otherwise stated

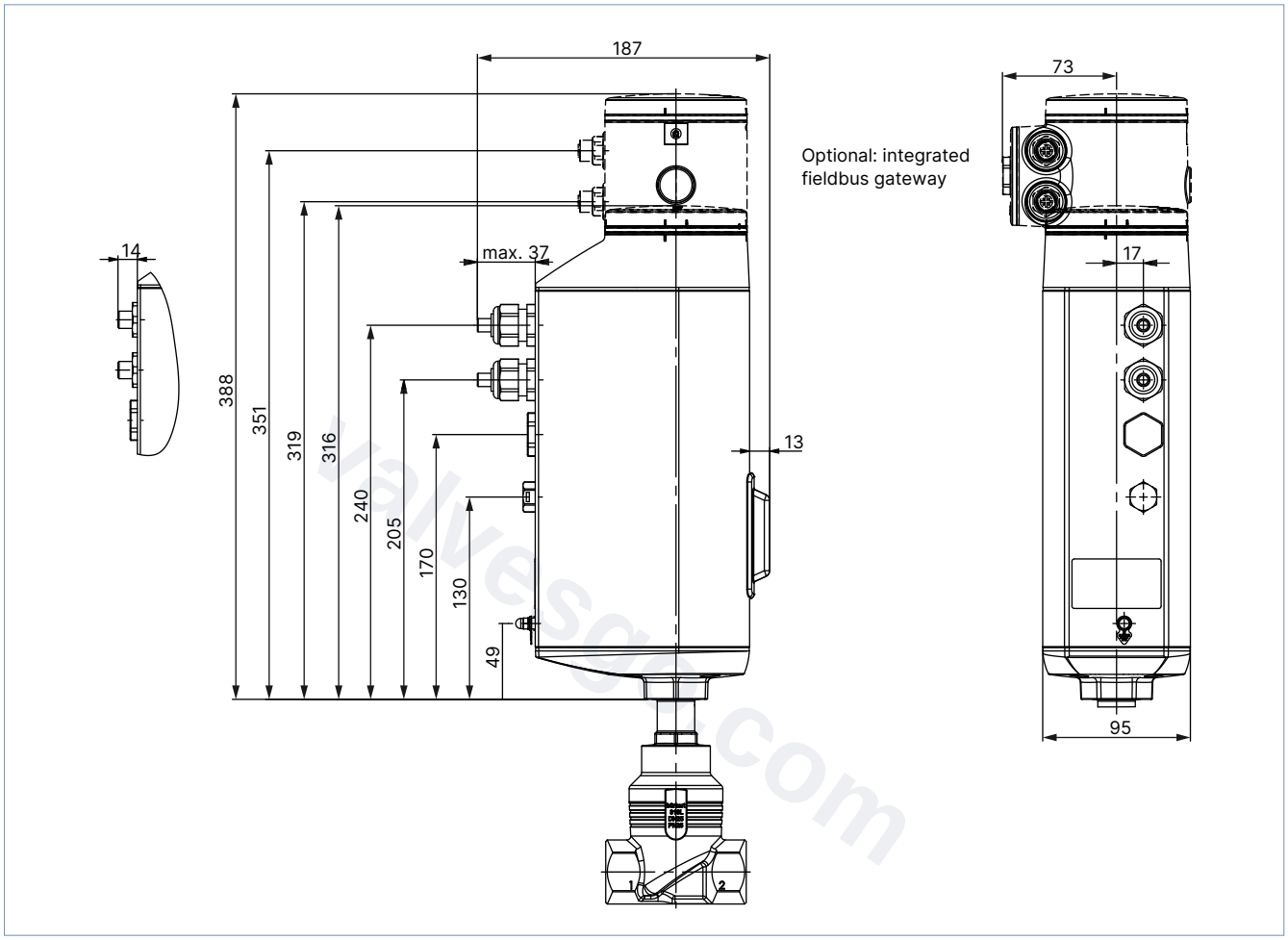

DTS 1000295570 EN Version: - Status: RL (released | freigegeben | valide) printed: 06.10.2026

valvesgo.com

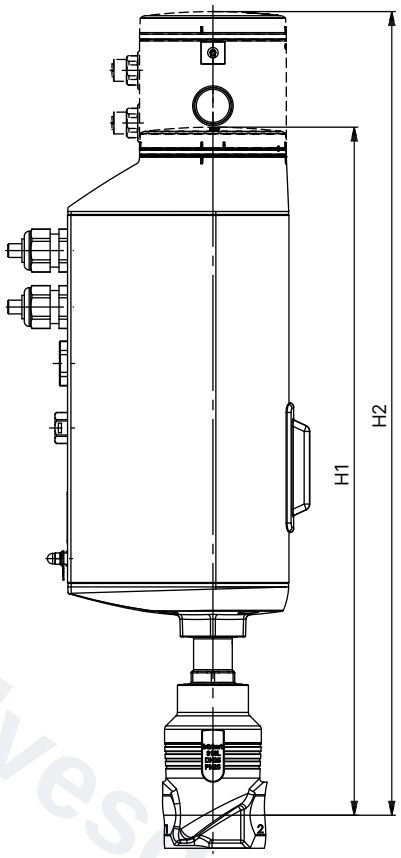

Nominal diameter (port connection)		Height [1.)]	
DN	**NPS**	**H1** **Standard variant**	**H2** [2.)] **Fieldbus variant (KOMM ≠ G, N, L)**
10	⅜	417	489
15	½	417	489
20	¾	423	495
25	1	427	498
32	1¼	448	519
40	1½	452	524
50	2	485	557

1.) Dimensions without sealing function: the actuator is raised by approx. 2 mm in the closed position.
2.) Optional: integrated fieldbus gateway

DTS 1000295570 EN Version: - Status: RL (released | freigegeben | valide) printed: 06.10.2026

valvesgo.com

AG3

Note:
Dimensions in mm, unless otherwise stated

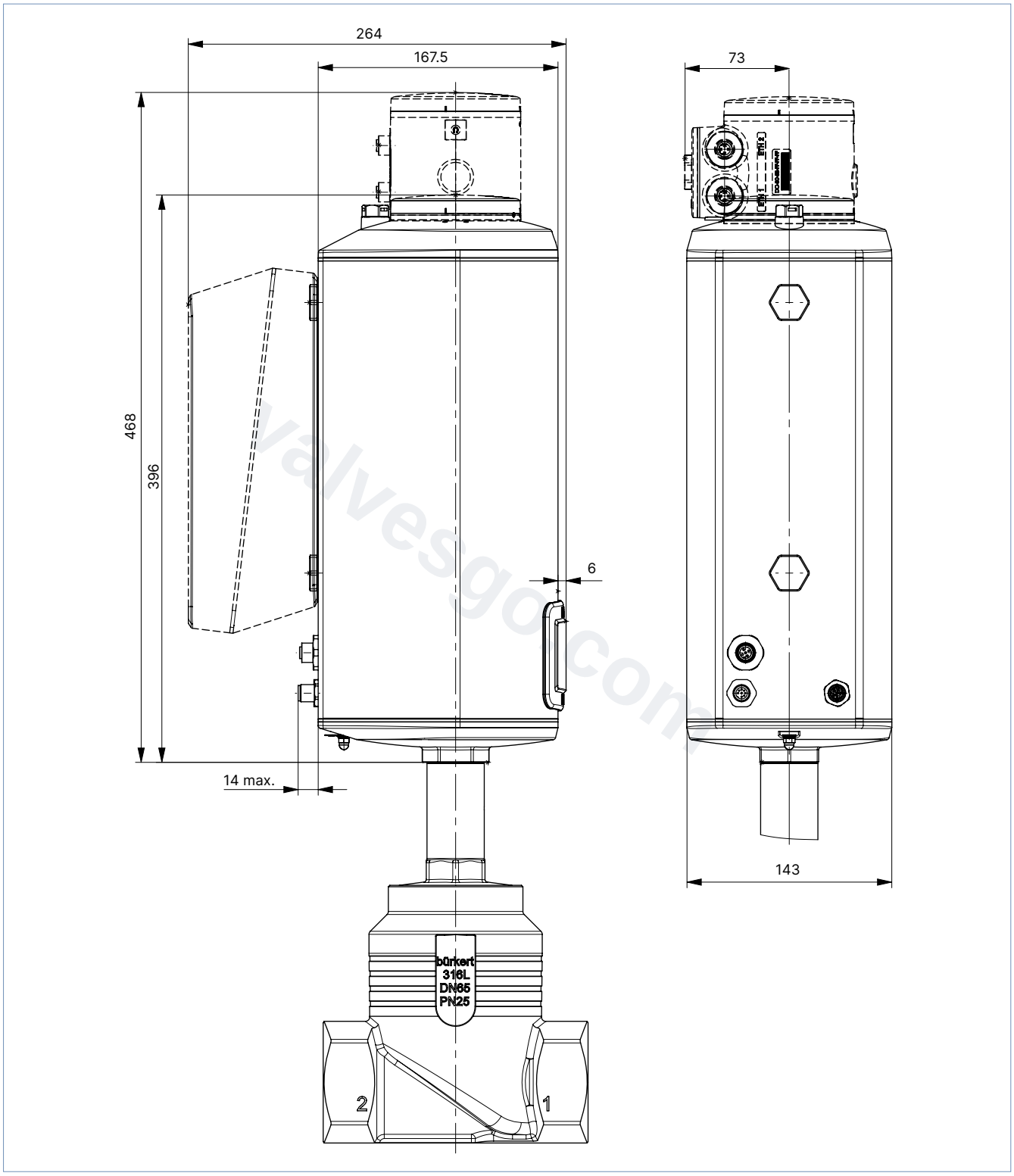

DTS 1000295570 EN Version: - Status: RL (released | freigegeben | valide) printed: 06.10.2026

valvesgo.com

DTS 1000295570 EN Version: - Status: RL (released | freigegeben | valide) printed: 06.10.2026

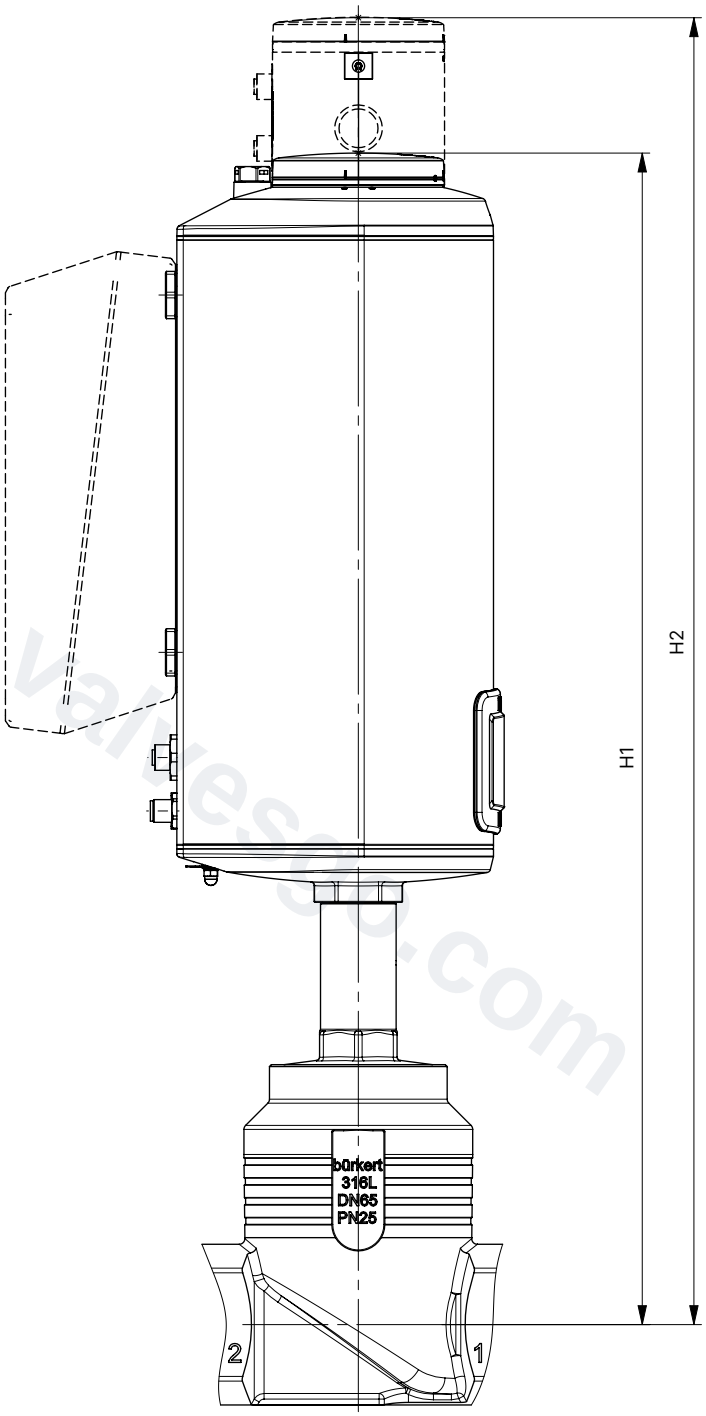

Nominal diameter (port connection)		Height [1.)]	
DN	**NPS**	**H1** **Standard variant**	**H2** [2.)] **Fieldbus variant (KOMM ≠ G, N, L)**
40	1½	560	632
50	2	566	638
65	2½	620	692
80	3	628	700
100	4	638	710

1.) Dimensions without sealing function: the actuator is raised by approx. 2 mm in the closed position.
2.) Optional: integrated fieldbus gateway

valvesgo.com

4.2. Body with flange connection

Note:
Dimensions in mm, unless otherwise stated

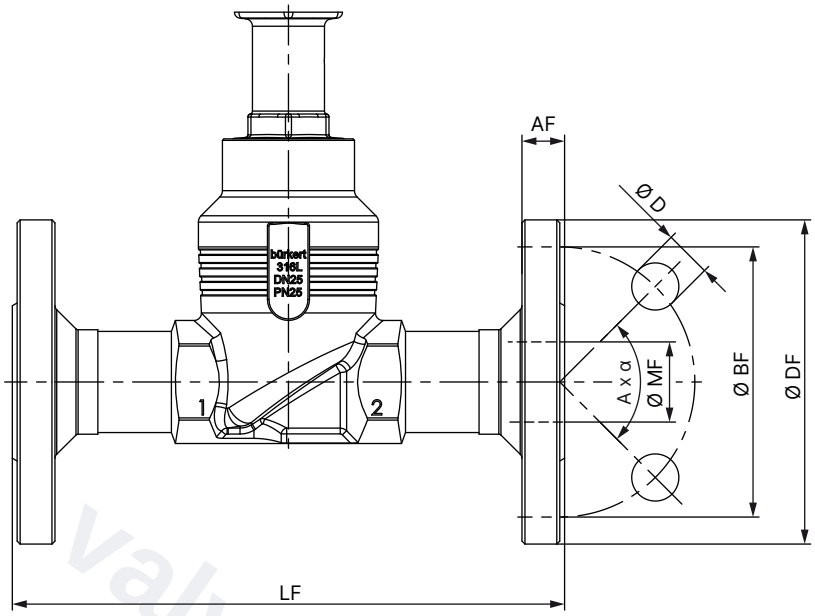

Nominal diameter (port connection)	DIN EN 1092 PN 25 FTF 1 according to DIN EN 558 - 1							JIS 10K FTF 10 according to DIN EN 558 - 2						
DN	Ø DF	LF	Ø BF	AF	Ø D	A x α	Ø MF	Ø DF	LF	Ø BF	AF	Ø D	A x α	Ø MF
10	90	130	60	16	14	4 × 90°	13.6	–	–	–	–	–	–	–
15	95	130	65	16	14	4 × 90°	18.1	95	108	70	12	15	4 × 90°	18.1
20	105	150	75	18	14	4 × 90°	23.7	100	117	75	14	15	4 × 90°	23.7
25	115	160	85	18	14	4 × 90°	29.7	125	127	90	14	19	4 × 90°	29.7
32	140	180	100	18	18	4 × 90°	38.4	135	140	100	16	19	4 × 90°	38.4
40	150	200	110	18	18	4 × 90°	44.3	140	165	105	16	19	4 × 90°	44.3
50	165	230	125	20	18	4 × 90°	56.3	155	203	120	16	19	4 × 90°	56.3
65	185	290	145	22	18	8 × 45°	66.0	175	216	140	18	19	4 × 90°	71.5
80	200	310	160	24	18	8 × 45°	81.0	185	241	150	18	19	8 × 45°	84.3
100	235	350	190	24	22	8 × 45°	100.0	210	292	175	18	19	8 × 45°	109.1

Nominal diameter (port connection)	ANSI B 16.5 Class 150 FTF 37 according to DIN EN 558 - 2						
NPS	Ø DF	LF	Ø BF	AF	Ø D	A x α	Ø MF
½	89	184	60.5	11.2	15.7	4 × 90°	15.7
¾	99	184	69.9	12.7	15.7	4 × 90°	20.8
1	108	184	79.2	14.2	15.7	4 × 90°	26.7
1½	127	222	98.6	17.5	15.7	4 × 90°	40.9
2	152	254	120.7	19.1	19.1	4 × 90°	52.6
2½	178	276	139.7	22.3	19.1	4 × 90°	62.7
3	190	298	152.5	23.9	19.1	4 × 90°	78.0
4	229	352	190.5	23.9	19.1	8 × 45°	102.4

DTS 1000295570 EN Version: - Status: RL (released | freigegeben | valide) printed: 06.10.2026

valvesgo.com

4.3. Body with threaded connection

Note:
Dimensions in mm, unless otherwise stated

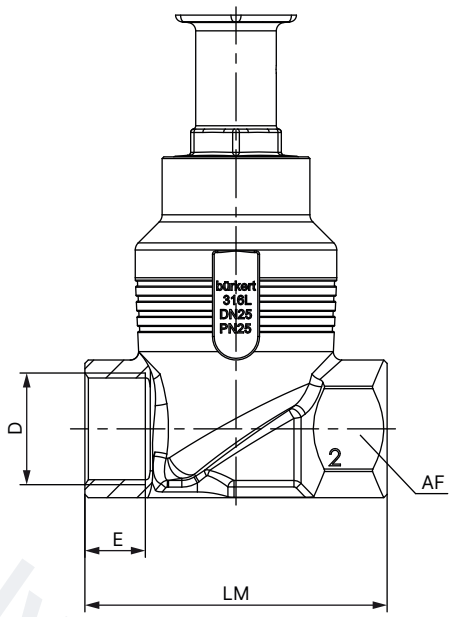

Nominal diameter (port connection)	G (DIN ISO 228 - 1) NPT (ASME B1.20.1) RC (ISO 7 - 1) DIN EN 10226 - 2					
	D	E			LM	AF
DN	NPS	G	NPT	RC		
10	⅜	12	10.3	10.1	65	27
15	½	14	13.7	13.2	65	27
20	¾	16	14	14.5	75	34
25	1	18	16.8	16.8	90	41
32	1¼	20	17.3	19.1	110	50
40	1½	22	17.3	19.1	120	55
50	2	24	17.6	23.4	150	70
65	2½	26	23.7	26.7	185	85
80	3	28	30.5	29.8	205	100
100	4	32	33	35.8	240	125

DTS 1000295570 EN Version: - Status: RL (released | freigegeben | valide) printed: 06.10.2026

valvesgo.com

4.4. Body with welded connection

Note:
Dimensions in mm, unless otherwise stated

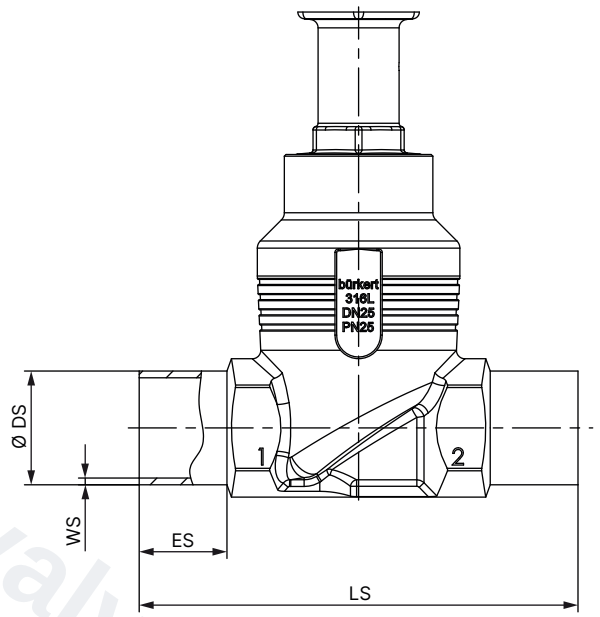

Nominal diameter (port connection)	ES	LS	DIN EN ISO 1127 / ISO 4200 / DIN 11866 series B		DIN 11850 - 2 / DIN 11866 series A / DIN EN 10357 series A	
DN			Ø DS	WS	Ø DS	WS
10	20	90	17.2	1.6	13	1.5
15	20	90	21.3	1.6	19	1.5
20	20	100	26.9	1.6	23	1.5
25	26	130	33.7	2	29	1.5
32	26	140	42.4	2	35	1.5
40	26	150	48.3	2	41	1.5
50	26	175	60.3	2	53	1.5
65	26	210	76.1	2.3	70	2
80	26	230	88.9	2.3	85	2
100	26	260	114.3	2.6	104	2

Nominal diameter (port connection)	ES	LS	ASME BPE / DIN 11866 series C	
NPS			Ø DS	WS
½	20	90	12.7	1.65
¾	20	90	19.05	1.65
1	20	100	25.4	1.65
1½	26	140	38.1	1.65
2	26	150	50.8	1.65
2½	26	175	63.5	1.65
3	26	210	76.2	1.65
4	26	260	101.6	2.11

DTS 1000295570 EN Version: - Status: RL (released | freigegeben | valide) printed: 06.10.2026

valvesgo.com

4.5. Body with clamp connection

Note:
Dimensions in mm, unless otherwise stated

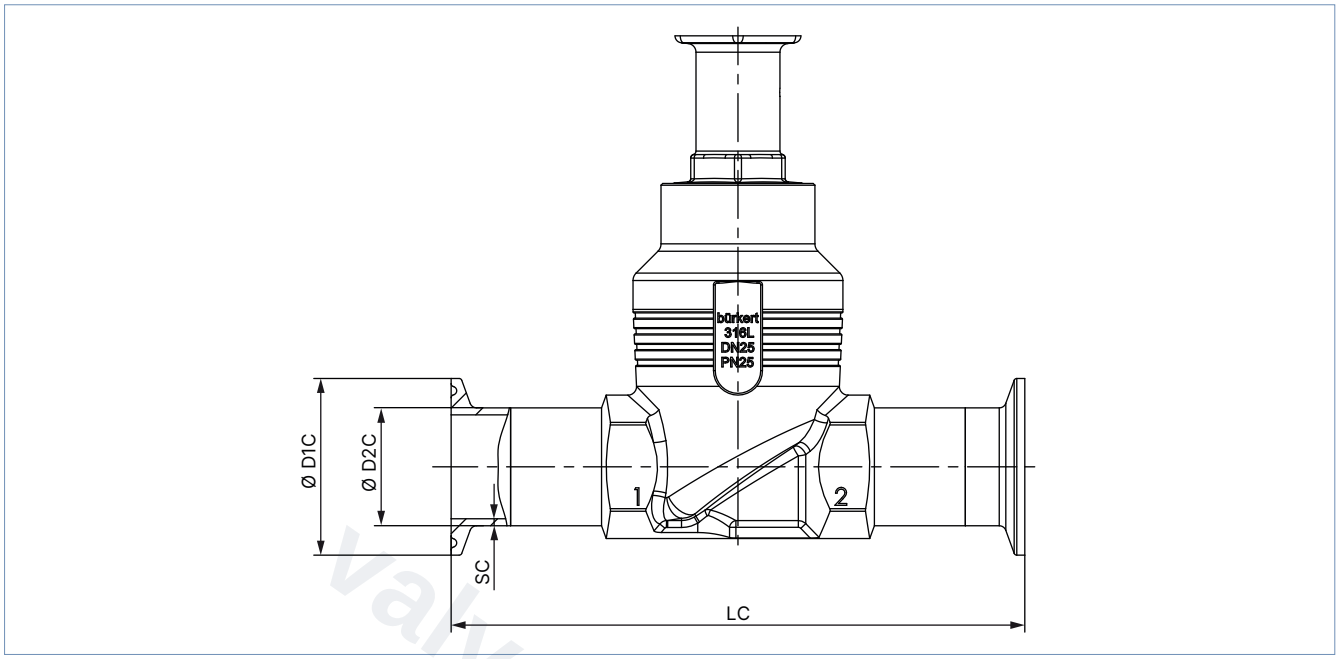

Nominal diameter (port connection)	Clamp: DIN 32676 series A Pipe: DIN 11850 - 2 / DIN 11866 series A /DIN EN 10357 series A				Clamp: DIN 32676 series B Pipe: DIN EN ISO 1127 / ISO 4200 / DIN 11866 series B			
DN	**LC**	**Ø D2 C**	**Ø D1 C**	**SC**	**LC**	**Ø D2 C**	**Ø D1 C**	**SC**
15	126	19	34	1.5	146	21.3	50.5	1.6
20	136	23	34	1.5	136	26.9	50.5	1.6
25	173	29	50.5	1.5	164	33.7	50.5	2.0
32	179	35	50.5	1.5	–	–	–	–
40	193	41	50.5	1.5	193	48.3	64	2.0
50	218	53	64	1.5	218	60.3	77.5	2.0
65	266	70	91	2	266	76.1	91	2.0
80	–	–	–	–	286	88.9	106	2.3
100	–	–	–	–	316	114.3	130	2.3

Nominal diameter (port connection)	LC	Clamp: ASME BPE / DIN 32676 series C Pipe: ASME BPE / DIN 11866 series C		
NPS		**Ø D2 C**	**Ø D1 C**	**SC**
½	122	12.7	25	1.65
¾	126	19.05	25	1.65
1	126	25.4	50.5	1.65
1½	172	38.1	50.5	1.65
2	182	50.8	64	1.65
2½	231	63.5	77.5	1.65
3	265	76.2	91	1.65
4	315	101.6	119	2.11

DTS 1000295570 EN Version: - Status: RL (released | freigegeben | valide) printed: 06.10.2026

valvesgo.com

5. Product connections

5.1. Electrical connection

Note:
For the terminal assignment of the connection variant “cable gland with connection terminals”, see **operating instructions Type 3321** ▶.

Description of circular plug-in connectors

AG2 variant

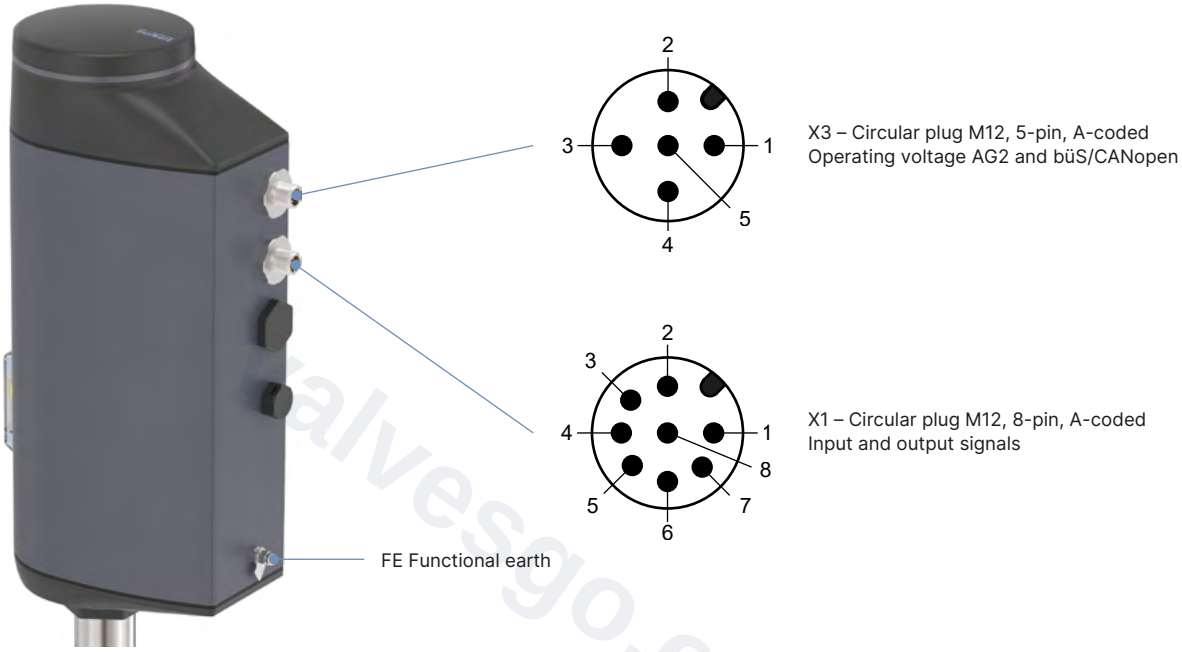

AG3 variant

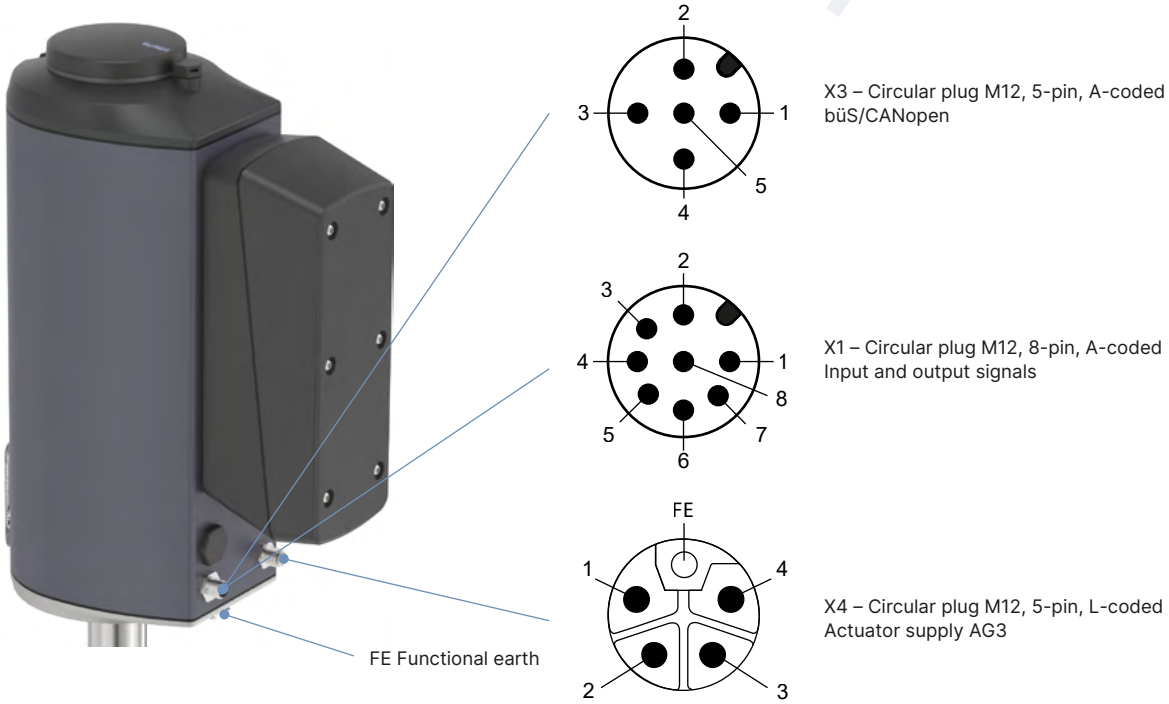

DTS 1000295570 EN Version: - Status: RL (released | freigegeben | valide) printed: 06.10.2026

valvesgo.com

Fieldbus gateway (optional)

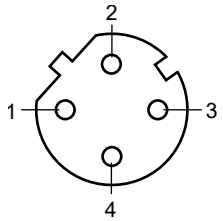

X7 – M12 round socket, 4-pin, D-coded, fieldbus connection (2-port Ethernet switch)

The following circular plug-in connectors are used depending on the device variant:

Circular plug-in connector	AG2			AG3		
	Electrical variant			Electrical variant		
	Binary with digital input (büS service interface)	With fieldbus gateway	büS/CANopen	Binary with digital input (büS service interface)	With fieldbus gateway	büS/CANopen
	0...5 V (log „0“) 10...30 V (log „1“)	for EtherNet/IP, PROFINET, Modbus TCP, EtherCAT protocols		0...5 V (log „0“) 10...30 V (log „1“)	for EtherNet/IP, PROFINET, Modbus TCP, EtherCAT protocols	
X1	X	–	–	X	–	–
X3	X	X	X	–	X	X
X4	–	–	–	X	X	X
X7	–	X	–	–	X	–

X = available
– = not available

DTS 1000295570 EN Version: - Status: RL (released | freigegeben | valide) printed: 06.10.2026

valvesgo.com

Circular plug-in connector with pin assignment

Input and output signals

X1 – Circular plug M12, 8-pin, A-coded	Pin	Assignment
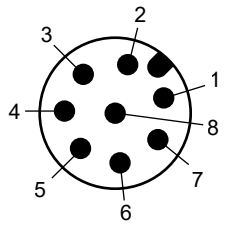	**1**	Digital input +
	2	GND for digital input and digital outputs
	3	Digital output 2 +
	4	Digital output 1 +
	5	Do not connect
	6	Do not connect
	7	Do not connect
	8	Do not connect

Operating voltage AG2 and büS/CANopen

X3 – Circular plug M12, 5-pin, A-coded	Pin	Assignment
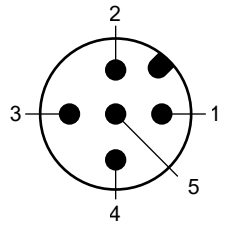	**1**	CAN Shield / shield
	2	Operating voltage 24 V DC ± 10 %
	3	GND / CAN_GND
	4	CAN_H
	5	CAN_L

Operating voltage AG3

X4 – Circular plug M12, 5-pin, L-coded	Pin	Assignment
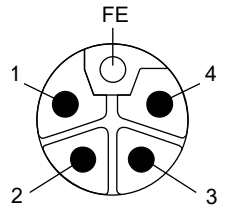	**1**	Operating voltage 24 V DC ± 10 %
	2	Do not connect
	3	GND
	4	Do not connect
	FE	Functional earth, connected to housing

Fieldbus connection

X7 – Circular socket M12, 4-pin, D-coded	Pin	Assignment
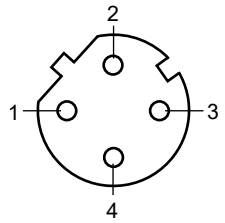	**1**	Transmit +
	2	Receive +
	3	Transmit -
	4	Receive -

DTS 1000295570 EN Version: - Status: RL (released | freigegeben | valide) printed: 06.10.2026

valvesgo.com

6. Performance specifications

6.1. Fluidic data

Overview of flow characteristics with flow below seat

Note:

- K_V value [m³/h]: measurement with water according to DIN EN 60534 - 2 - 4
- For operating limits see "6.2. Operating limits" on page 22

Nominal diameter (port connection)		Actuator force 1.)	Max. operating pressure		K_V value water
			Seat seal		
			PTFE (up to + 130 °C)	PEEK (up to + 230 °C)	
DN	NPS	[N]	[bar(g)]		[m³/h]
15	½ 2.)	1300	25	25	4.7
20	¾ 2.)				8.1
25	1 2.)				13
32	1¼ 2.)	1300	16	16	18
		2500	25	25	
40	1½ 2.)	1300	10	10	31
		2500	18	18	
		7700	–	25	
50	2 2.)	1300	6	6	45
		2500	10	10	
		7700	–	25	
65	2½ 2.)	10000	–	25	73
80	3 2.)		–	17	110
100	4 2.)		13.5	10.5	165

1.) AG2: actuator size 2 with a nominal force of 1300 or 2500 N
AG3: actuator size 3 with a nominal force of 7700 or 10000 N
2.) Deviation for port connections according to ASME BPE: the nominal diameter (port connection) next in size is used, e.g. NPS 1 instead of NPS ¾.

DTS 1000295570 EN Version: - Status: RL (released | freigegeben | valide) printed: 06.10.2026

valvesgo.com

valvesgo.com

6.2. Operating limits

Note:
For device variants with approvals or conformities, deviating technical operating limits (temperature, pressure) may apply. Refer to the corresponding approval-related documentation.

Operating limits for medium temperature and operating pressure

In addition to the maximum operating pressures, the application range of Bürkert process valves is limited by the nominal pressure in accordance with the relevant standard.

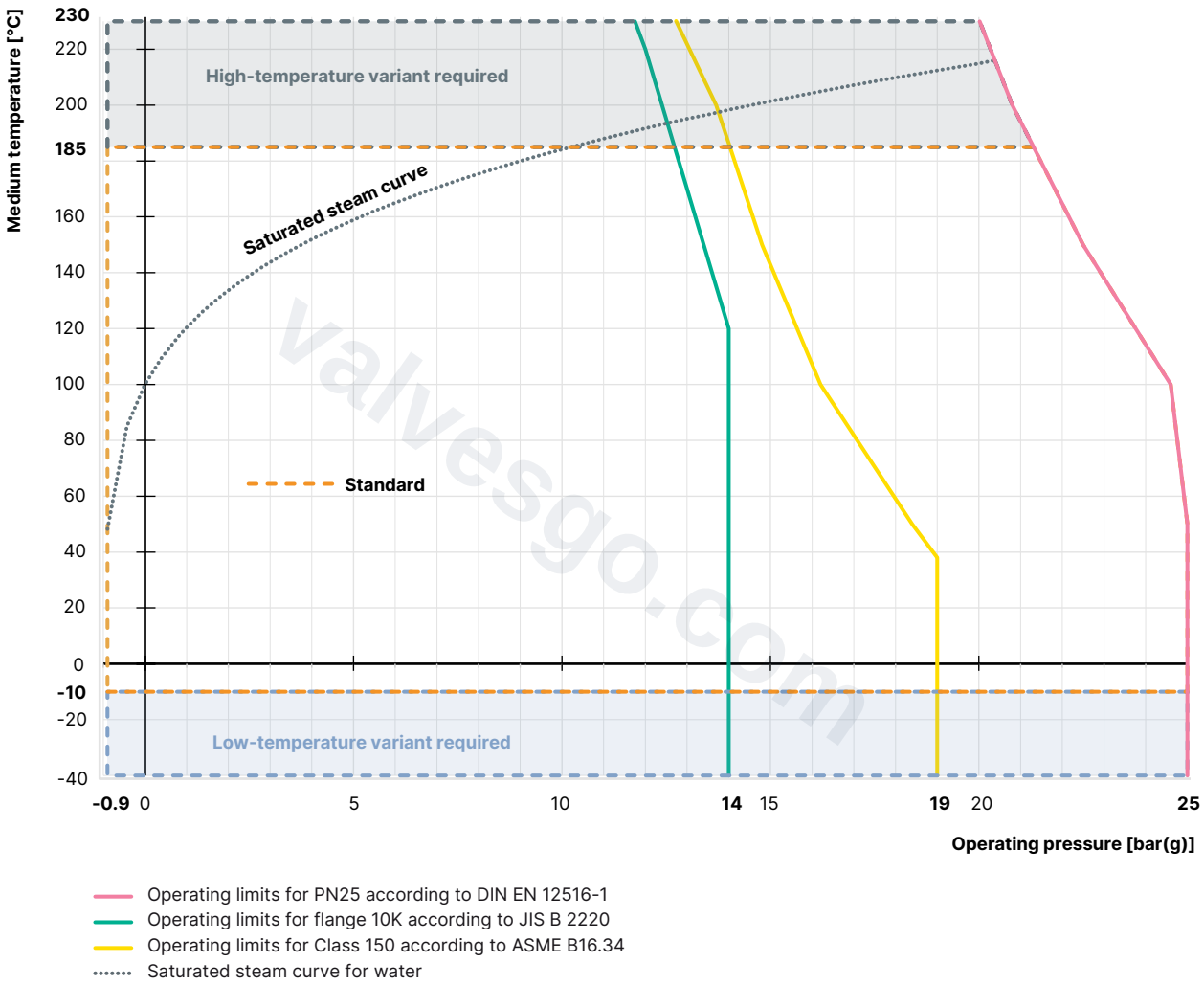

DTS 1000295570 EN Version: - Status: RL (released | freigegeben | valide) printed: 06.10.2026

valvesgo.com

Operating limits for ambient and medium temperature

The maximum permissible temperature for the environment and the medium are dependent on each other. The maximum allowable temperature curves of different device variants are shown in the temperature chart. The curves were determined for maximum operating conditions (maximum operating pressure and motor power). For deviating operating conditions an individual verification can be carried out. Contact your Bürkert sales department for more information.

AG2

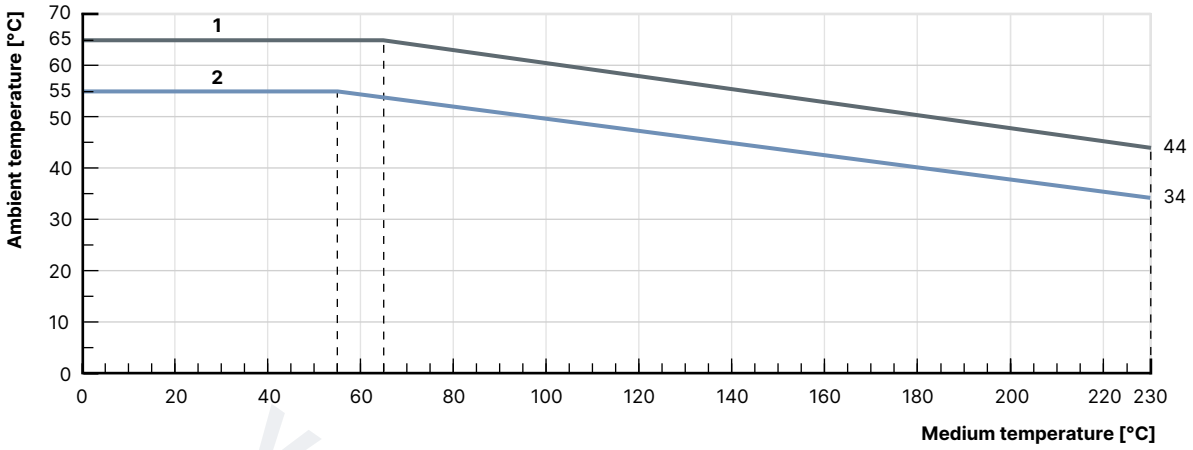

No.	Description
1	Devices without module
2	Devices with energy storage SAFEPOS energy-pack or fieldbus gateway

AG3

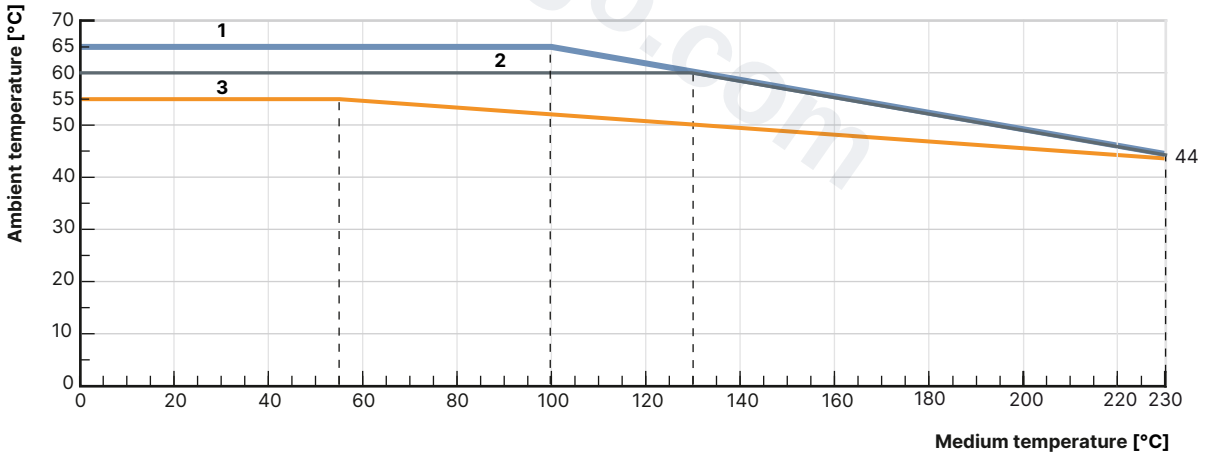

No.	Description
1	Devices without module
2	Devices with energy storage SAFEPOS energy-pack
3	Devices with fieldbus gateway

DTS 1000295570 EN Version: - Status: RL (released | freigegeben | valide) printed: 06.10.2026

valvesgo.com

Operating limits for seat seal

PTFE is used for a maximum medium temperature of <+ 130 °C. If the maximum medium temperature temporarily or permanently exceeds + 130 °C, PEEK as a seal material is the appropriate solution.

Operating limits for optional variants

High-temperature variant
Thanks to an adaption of the spindle seal, this variant is suitable for applications with steam, neutral gases and other heat transfer mediums up to + 230 °C.

Drinking water variant
Wetted materials are tested in contact with the medium are tested for suitability with drinking water up to + 85 °C.

Vacuum variant
Without leakage bore, this design is suitable for pressures down to - 0.9 bar.

Low-temperature variant
Suitable for minimum medium temperatures down to - 40 °C.

Variant for oxygen
Non-metallic wetted materials are tested for suitability with oxygen and are suitable for operating pressures up to 25 bar(g) and medium temperatures up to + 60 °C.

valvesgo.com

DTS 1000295570 EN Version: - Status: RL (released | freigegeben | valide) printed: 06.10.2026

valvesgo.com

6.3. Electrical control and interfaces

Interface diagram

The actuator position is controlled according to the digital input. The selection is made either by an external standard signal or via a fieldbus (digital).

Inputs and outputs:

- 1 digital input, 2 digital outputs

Interface:

- Cable gland with connection terminals (only AG2)
- M12 circular plug-in connectors (optional)

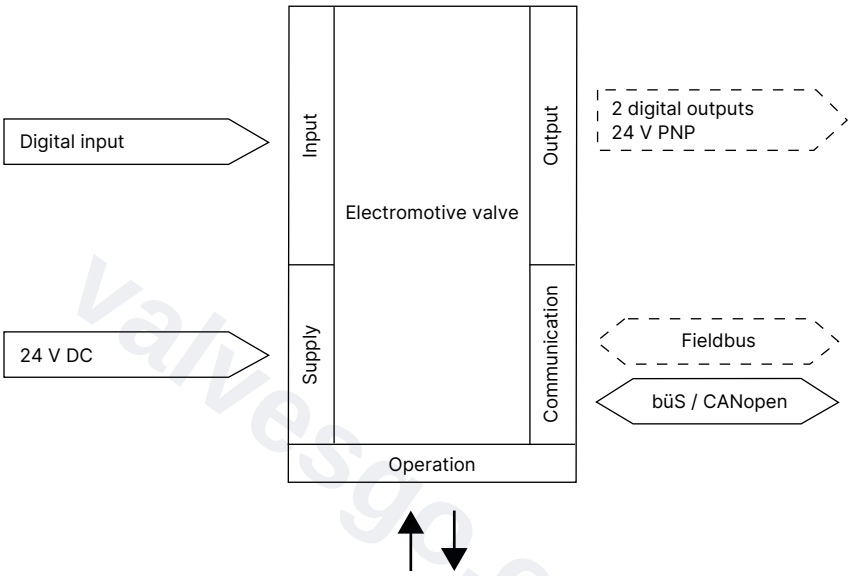

Note:
Optional outputs are represented as a broken line.

Control data	
Digital input	0...5 V = log „0“, 10...30 V = log „1“, inverted input reversed accordingly
Digital output	Current limitation 100 mA
Communication	
Communication interface (büS)	Connection to PC via USB-büS interface set (connection terminals, circular plug-in connector or büS service interface)
Communication software (büS)	Bürkert Communicator, see **Type 8920** ▸

DTS 1000295570 EN Version: - Status: RL (released | freigegeben | valide) printed: 06.10.2026

valvesgo.com

7. Product design and assembly

7.1. Product features

Note
Further information can be found in the **operating instructions Type 3321** ▶.

User interface	
The basic functions are operated by 4 DIP switches and 2 push buttons. These are located under the blind cover which can be removed manually by turning. Through the büS service interface, the device can also be configured in detail with the Bürkert Communicator software. For this, the optional USB-büS interface set is required (see "8.4. Ordering chart accessories" on page 31).	**Blind cover dismantled** 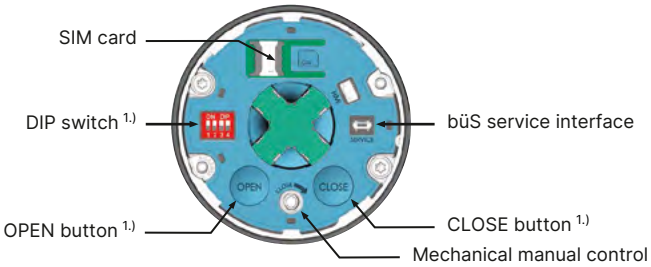 1.) Non-functional in devices with display module. The display must be used for operation.
Actuation	
Mechanical manual override The manual override for mechanical movement of the valve is located for AG2 under the blind cover and for AG3 under the pressure compensation element. It ensures that the actuator can be operated even if the power supply fails.	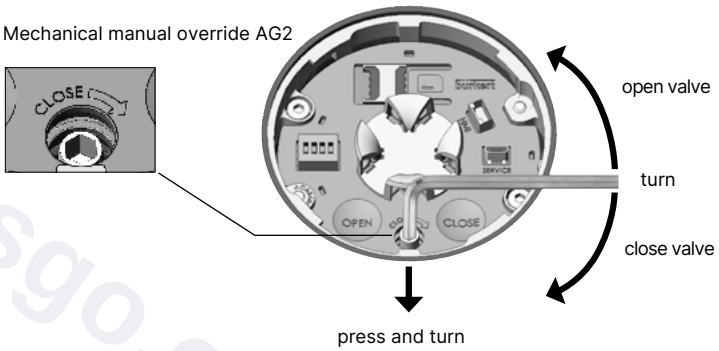
Electrical manual override The electrical manual override for the procedure is carried out via two buttons under the blind cover.	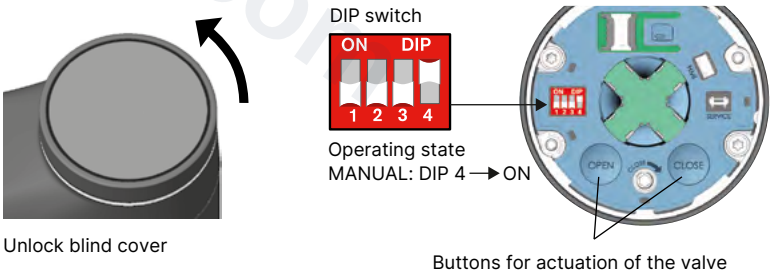
Display elements	
Display 360° LED light ring A clearly visible 360° LED ring is attached to the blind cover to indicate the device status, the valve end position and the operating state. The LED light ring lights up, blinks or flashes in one or changing colours, depending on the LED mode set.	
Mechanical position indicator: The mechanical position indicator shows the current valve position even if the supply voltage fails.	

DTS 1000295570 EN Version: - Status: RL (released | freigegeben | valide) printed: 06.10.2026

valvesgo.com

Data transmission (optional)	
SIM card (optional) With the optionally available SIM card, device-specific values and user settings can be stored and quickly transferred to another device.	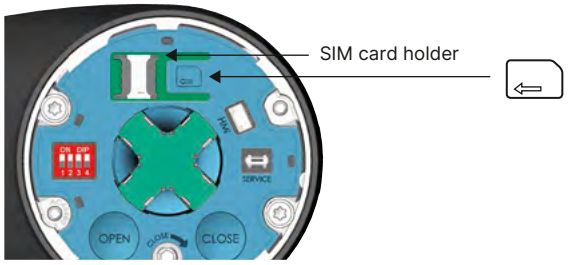
büS service interface The büS service interface connects the device with the Bürkert Communicator software on a PC, laptop or smartphone. From there a configuration of the device or error diagnosis can be carried out.	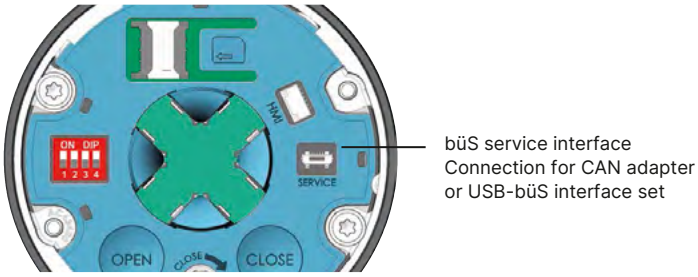

Safety position via energy storage (optional)	AG2	AG3
The safety starting positions in case of power interruption is realised with the optional energy storage SAFEPOS energy-pack. The desired position is set via the menu. In addition to the end positions (open/closed), any desired intermediate position can be defined here. The energy storage has a lifespan of up to 10 years, depending on the operating conditions. The power of the energy storage is monitored and a warning is displayed to indicate its service life is coming to an end. The storage device is designed as a plug-in module to facilitate replacement. Without energy storage, the valve remains in the last position it was in. The energy storage device is fully charged and ready for operation after a maximum of 120 seconds (depending on the operating conditions). The energy storage device cannot be retrofitted in the field.	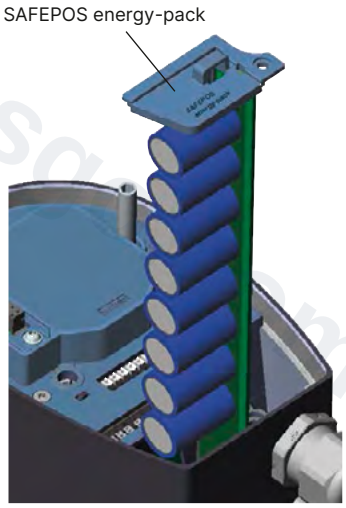	

Fieldbus: EtherNet/IP, PROFINET, Modbus TCP, EtherCAT (optional)	
The fieldbus gateway for EtherNet/IP, PROFINET, Modbus TCP and EtherCAT is integrated in an additional module. It has 2 fieldbus connections with 4-pin M12 circular sockets. The interfaces for the fieldbus connection and the status LEDs are located under the gateway housing cover. If there is a need for it to be included in a network, the Ethernet configuration can be performed via the web server. The gateway cannot be retrofitted in the field.	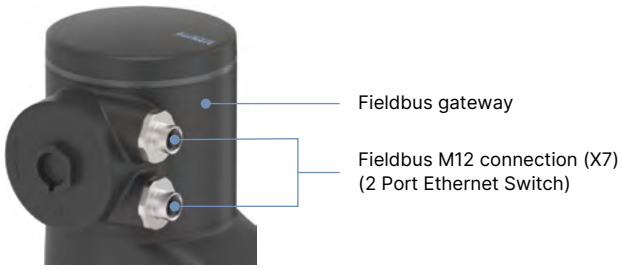

DTS 1000295570 EN Version: - Status: RL (released | freigegeben | valide) printed: 06.10.2026

valvesgo.com

7.2. Product assembly

The electromotive linear actuator consists of a brushless DC motor, a gear and a spindle system that transfers the force to the closing element. The integrated control electronics are controlled either by standard signals or via a fieldbus (digital). A positioner and a process controller are available as controller variants. The electromotive linear actuator is designed to provide optimum efficiency. At the same time, it keeps the valve tight and in position even at the maximum specified medium pressure in a powerless standstill. The optional energy storage device SAFEPOS energy-pack is available for the device. If the supply voltage fails, it supplies the actuator with the energy required to move the valve into the desired position, which can be set in the menu.

The valve position can be changed manually in 2 ways. Either via the electrical manual control or via a mechanical manual override if no supply voltage is available. The device can be set and operated either via 2 capacitive keys switches or, optionally, y on a display with touch screen. Additionally, you can always operate the device via the büS service interface and using the software Bürkert Communicator.

The intelligent process valve Type 3321 offers the operator options for process monitoring, valve diagnosis and preventive maintenance. Internal measurements of the operating state are evaluated and, if necessary, issued as a warning or error message. These signal, for example, impermissible ambient and process conditions, functional deviations of components, or the status of the energy storage device.

Design of the electromotive valve Type 3321 AG2

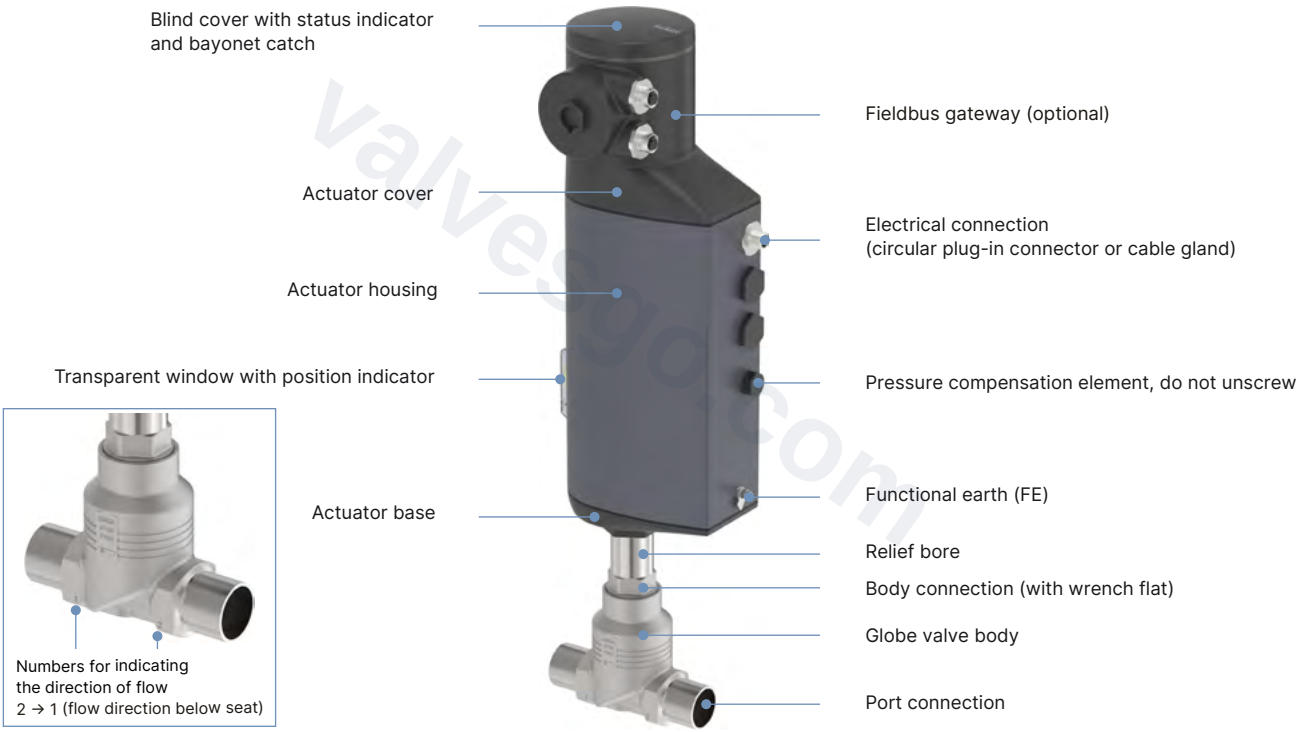

DTS 1000295570 EN Version: - Status: RL (released | freigegeben | valide) printed: 06.10.2026

valvesgo.com

Design of the electromotive valve Type 3321 AG3

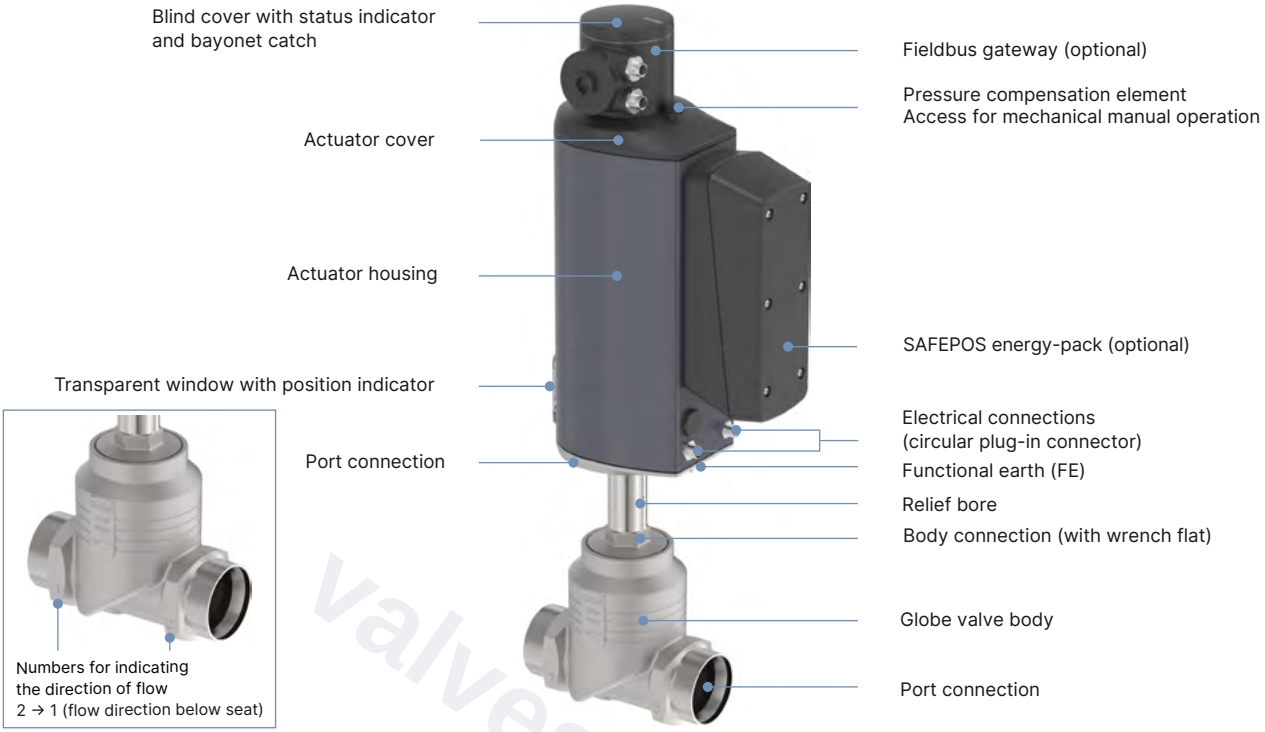

DTS 1000295570 EN Version: - Status: RL (released | freigegeben | valide) printed: 06.10.2026

valvesgo.com

valvesgo.com

8. Ordering information

8.1. Bürkert eShop

Bürkert eShop – Easy ordering and quick delivery

You want to find your desired Bürkert product or spare part quickly and order directly? Our online shop is available for you 24/7. Sign up and enjoy all the benefits.

Order online now

8.2. Bürkert product filter

Bürkert product filter – Get quickly to the right product

You want to select products comfortably based on your technical requirements?
Use the Bürkert product filter and find suitable articles for your application quickly and easily.

Try out our product filter

8.3. Bürkert Product Enquiry Form

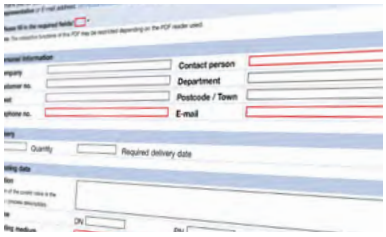

Bürkert Product Enquiry Form – Your enquiry quickly and compactly

Would you like to make a specific product enquiry based on your technical requirements? Use our Product Enquiry Form for this purpose. There you will find all the relevant information for your Bürkert contact. This will enable us to provide you with the best possible advice.

Fill out the form now

DTS 1000295570 EN Version: - Status: RL (released | freigegeben | valide) printed: 06.10.2026

valvesgo.com

8.4. Ordering chart accessories

Note:
For device variants with approvals or conformities, additional accessories may be required for intended use. Refer to the relevant approval documentation.

Standard accessories

Description	Article no.
SIM card for data transmission between units	291773
Holding device for port connection DN 15...40	693770
Holding device for port connection DN 50	693771
Blind cover made of plastic	277881
Wearing part energy storage SAFEPOS energy-pack (AG2)	285834
Wearing part energy storage SAFEPOS energy-pack (AG3)	20046438

Connection cable

Note:
For connection to a büS/CANopen network see „Supplement | Cabling guide büS/EDIP“ on our website under „User Manuals“, **Type 3321** ▶.

Description	Article no.
M12 circular socket with cable, 4-pin, A-coded, cable length: 5 m, for X3, operating voltage AG2 (without communication)	918038
M12 circular socket with cable, 5-pin, L-coded, cable length: 5 m, for X4, operating voltage AG3 (without communication)	20010840
M12 circular socket with cable, 8-pin, A-coded, cable length: 2 m, for X1, input and output signals	919061
M12 circular plug with cable, 4-pin, D-coded to M12 straight plug, cable length: 5 m, for X7, fieldbus connection	775043
M12 circular plug with cable, 4-pin, D-coded to RJ45 plug, cable length: 5 m, for X7, fieldbus connection	775053

büS interface

Note:
- For connection to a büS/CANopen network see „Supplement | Cabling guide büS/EDIP“ on our website under „User Manuals“, **Type 3321** ▶.
- Detailed charts of accessories can be found in the cabling guide, see „Supplement | Cabling guide büS/EDIP“ on our website under „User Manuals“, **Type 3321** ▶.

Description	Article no.
Bürkert Communicator software, Type 8920	**Type 8920** ▶
USB-büS interface set 1 (Type 8923)	772426
USB-büS interface set 2 (Type 8923)	772551
büS adapter for büS service interface (M12 on büS service interface micro USB), cable length: 0.3 mm	774931

DTS 1000295570 EN Version: - Status: RL (released | freigegeben | valide) printed: 06.10.2026

valvesgo.com