bürkert
FLUID CONTROL SYSTEMS

Direct-acting 2/2-way plunger valve

- Direct-acting, powerful valve with diameter of up to DN 13
- Vibration-proof, bolted coil system
- Energy-saving double coil technology with kick and drop variant
- Explosion proof variants
- High pressure variants for gases and liquids

Product variants described in the data sheet may differ from the product presentation and description.

Can be combined with

Type 2518
Cable plug,
form A according to
DIN EN 175301 - 803

Type 2509
Cable plug,
form A according to
DIN EN 175301 - 803

Type description

Valve 6027 is a direct-acting plunger valve. The stopper and plunger guide tube are welded together to enhance pressure resistance and leak-tightness. Various seal material combinations are available depending on the application. The coils are moulded with chemically resistant epoxy. An optional sliding ring bearing increases the service life with dry gases. Special seal technology is used for high-pressure applications. To reduce power consumption in operation, coils with Kick and Drop electronics assembly (double coil technology) are available. In combination with a plug in accordance with DIN EN 175301 - 803 Form A, the valves satisfy protection class IP65. NEMA 4X is available on request.

valvesgo.com

DTS 1000089742 EN Version: AU Status: RL (released | freigegeben | valide) printed: 21.05.2026

© Christian Bürkert GmbH & Co. KG, Subject to alteration

valvesgo.com

Table of contents

1. General technical data 4

2. Circuit functions 5

3. Approvals and conformities 5

3.1. General notes 5
3.2. Conformity 5
3.3. Standards 5
3.4. Explosion protection 6
3.5. North America (USA/Canada) 6
3.6. Drinking water 6
3.7. Foods and beverages/Hygiene 6
3.8. Others 7
Oxygen 7
Fire protection on railway vehicles 7
Safety shut-off valves 7
Fuel gases 7

4. Materials 8

4.1. Bürkert resistApp 8
4.2. Standard variant 8
Elastomer seal variant up to 30 bar 8
Variant with increased lifespan (NF39) 8
Variant PTFE pendulum seal up to 100 bar 9
4.3. High pressure variant up to 250 bar or 160 bar 9
4.4. Variant DN 13 10
Variant DN 13 standard 10
Variant DN 13 with increased lifespan (NF39) 10
4.5. Oil burner variant (PF15) 11

5. Dimensions 12

5.1. Standard variant 12
Threaded variant 12
Flange and screw-in variant 13
Flange and screw-in variant high pressure up to 250 bar or 160 bar 14
5.2. Variant DN 13 15
5.3. Oil burner variant (PF15) 16
5.4. UL Listed coil for hazardous locations, Class I, Division 2 17

6. Performance specifications 18

6.1. Power consumption 18
6.2. Ambient temperatures with Kick and Drop coils 18

7. Product accessories 18

7.1. Cable glands for ATEX/IECEx terminal box 18
7.2. Special tool to turn the terminal box 19

DTS 1000089742 EN Version: AU Status: RL (released | freigegeben | valide) printed: 21.05.2026

valvesgo.com

valvesgo.com

8. Ordering information 19

8.1. Bürkert eShop ... 19
8.2. Bürkert product filter ... 19
8.3. Bürkert Product Enquiry Form ... 19
8.4. Ordering chart standard variant elastomer seal up to 30 bar ... 20
8.5. Ordering chart standard variant pendulum seal up to 100 bar ... 21
8.6. Ordering chart high pressure variant up to 250 bar or 160 bar ... 22
8.7. Ordering chart variant DN 13 with increased lifespan (NF39) ... 23
8.8. Ordering chart DIN EN 161 (PO19) certification variant ... 23
8.9. Ordering chart oil burner variant (PF15) ... 24
Flow valve/return valve combinations ... 24
8.10. Ordering charts ATEX/IECEx variant with 3 meter cable ... 25
Standard variant with elastomer seal up to 30 bar ... 25
Standard variant with pendulum seal up to 100 bar ... 26
Variant DN 13 ... 26
High pressure variant up to 250 bar or 160 bar ... 27
8.11. Ordering chart ATEX/IECEx variant clamp terminal box ... 27
Standard variant with elastomer seal up to 30 bar ... 27
Standard variant with pendulum seal up to 100 bar ... 28
Variant DN 13 ... 28
High pressure variant up to 250 bar or 160 bar ... 29
8.12. Ordering chart accessories ... 30
Cable plug Type 2509, form A according to DIN EN 175301 - 803 ... 30
Cable plug Type 2518, form A according to DIN EN 175301 - 803 ... 30
Cable glands for ATEX/IECEX terminal box ... 31
Mounting bracket ... 31

DTS 1000089742 EN Version: AU Status: RL (released | freigegeben | valide) printed: 21.05.2026

valvesgo.com

valvesgo.com

1. General technical data

Product properties	
Dimensions	Further information can be found in chapter "5. Dimensions" on page 12.
Material	
Seal	FKM, EPDM, NBR, PTFE and PEEK
Body	Brass, stainless steel 1.4404/316L
Coil	Epoxy
Valve inner parts	Further information can be found in chapter "4. Materials" on page 8.
Orifice	DN 1.0...DN 13.0
Circuit function	A and B Further information can be found in chapter "2. Circuit functions" on page 5.
Thermal insulation class of solenoid coil	Epoxy coil class H
Performance data	
Duty cycle	100 % continuous operation
Switching time [1.)]	
Switching time AC	Opening: 10...30 ms Closing: 50...80 ms
Switching time DC	Opening: 20...30 ms Closing: 50...80 ms
Electrical data	
Operating voltage	24 V DC, 24 V 50 Hz, 24 V 60 Hz, 110 V 50 Hz, 120 V 60 Hz, 230 V 50 Hz, 240 V 60 Hz, others on request
Voltage tolerance	± 10 %
Medium data	
Operating medium [2.)]	
Standard	Vacuum, neutral gases and liquids (e.g. compressed air, water, hydraulic oil, petrol, DVGW 1 - 3 gas family) and slightly aggressive medium, hot liquids and steam
Oil burner variant (PF15)	Heating oil (EL, L, M, S) acc. to DIN 51603 part 1...6, shipping fuels acc. to ISO 8217 Only with stainless steel body: Fatty acid methyl ester (FAME) acc. to DIN EN 14213, rapeseed oil acc. to DIN V 51605
Medium temperature	**Seat seal/external seal**
Standard variant [3.)]	FKM/FKM: - 10 °C...+ 140 °C EPDM/EPDM: - 30 °C...+ 120 °C NBR/NBR: - 10 °C...+ 80 °C PTFE/FKM: - 10 °C...+ 140 °C PTFE/PEEK: - 40 °C..+ 180 °C
High pressure variant up to 250 bar or 160 bar	PEEK/FKM: - 10 °C...+ 80 °C PEEK/EPDM: - 30 °C...+ 80 °C PEEK/PEEK: - 40 °C..+ 80 °C
Approval DIN EN 161 (PO19)	NBR/NBR: - 20 °C...+ 80 °C FKM/FKM: 0 °C...+ 125 °C
Oil burner variant (PF15)	0 °C...+ 160 °C
Viscosity	Max. 21 mm^2/sec 1.6...76 cSt (DN 2, 2 NC 1.6...22 cSt) (Oil burner variant PF15)
Product connections	
Electrical connection	• Plug contacts according to DIN EN 175 301 - 803 form A for cable plug **Type 2518** ▶. Further information can be found in chapter "Cable plug Type 2518, form A according to DIN EN 175301 - 803" on page 30. • Plug contacts according to DIN EN 175 301 - 803 form A for cable plug **Type 2509** ▶. Further information can be found in chapter "Cable plug Type 2509, form A according to DIN EN 175301 - 803" on page 30.
Port connection	G ¼, G ⅜, G ½, G ¾, NPT ¼, NPT ⅜, NPT ½, NPT ¾ (RC on request)

DTS 1000089742 EN Version: AU Status: RL (released | freigegeben | valide) printed: 21.05.2026

valvesgo.com

Approvals and conformities	
DIN CERTCO registration (Oil burner variant PF15)	DN 2,2 (NO) Reg. No.: 5 sec. 255 DN 3,0 (NC) Reg. No.: 5 sec. 255 DN 3,5 (NC) Reg. No.: 5 sec. 255 DN 10,0 (NC) Reg. No.: 5 sec. 255
Degree of protection	IP65 with cable plug **Type 2518** ▶ NEMA 4X with cable plug **Type 2509** ▶ with stainless steel variants
Explosion protection	Further information can be found in chapter **"3.4. Explosion protection" on page 6**.
North America (USA/Canada)	Further information can be found in chapter **"3.5. North America (USA/Canada)" on page 6**.
Drinking water	Further information can be found in chapter **"3.6. Drinking water" on page 6**.
Foods and beverages/Hygiene	Further information can be found in chapter **"3.7. Foods and beverages/Hygiene" on page 6**.
Others	Further information can be found in chapter **"3.8. Others" on page 7**.
Environment and installation	
Installation position	As required, preferably with actuator upright
Ambient temperature	Max. + 55 °C Max. + 70 °C with Kick and Drop coil [4.)] - 15 °C...+ 60 °C (Oil burner variant PF15)

1.) Measurement at + 20 °C, 6 bar at the valve outlet, opening: pressure build-up 0...90 %, closing: pressure reduction 100...10 %
2.) Medium resistance according to material combination
3.) Circuit function normally open in conjunction with AC voltage is limited to max. + 100 °C
4.) The temperature specifications correspond to the specified switchable differential pressures. Higher temperatures are possible on request, depending on the differential pressure, duty cycle and number of switching operations Further information can be found in chapter **"6.2. Ambient temperatures with Kick and Drop coils" on page 18**.

valvesgo.com

2. Circuit functions

Symbol	Description
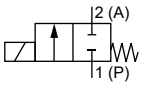	**Circuit function A (CF A)** 2/2-way solenoid valve Direct-acting Normally closed
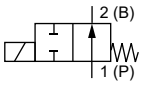	**Circuit function B (CF B)** 2/2-way solenoid valve Direct-acting Normally open

3. Approvals and conformities

3.1. General notes

- The approvals and conformities listed below must be stated when making enquiries. This is the only way to ensure that the product complies with all required specifications.
- Not all available variants can be supplied with the below mentioned approvals or conformities.

3.2. Conformity

In accordance with the Declaration of Conformity, the product is compliant with the EU Directives.

3.3. Standards

The applied standards which are used to demonstrate compliance with the EU Directives are listed in the EU-Type Examination Certificate and/or the EU Declaration of Conformity.

DTS 1000089742 EN Version: AU Status: RL (released | freigegeben | valide) printed: 21.05.2026

valvesgo.com

3.4. Explosion protection

Approval	Description
	Optional: Explosion protection according to category 2 (zone 1/21) Ex marking of the components according to the following table:

Coil Type AC10	
Coils with cable outlet	**Coils with terminal box**
ATEX: EPS 18 ATEX 1232 X II 2G Ex mb IIC T4 Gb II 2D Ex mb IIIC T130 °C Db **IECEx:** IECEx EPS 18.0110 X Ex mb IIC T4 Gb Ex mb IIIC T130 °C Db	**ATEX:** EPS 18 ATEX 1232 X II 2G Ex eb mb IIC T4 Gb II 2D Ex mb tb IIIC T130 °C Db **IECEx:** IECEx EPS 18.0110 X Ex eb mb IIC T4 Gb Ex mb tb IIIC T130 °C Db

3.5. North America (USA/Canada)

Approval	Description
	Optional: UL Listed for the USA and Canada The products are UL Listed for the USA and Canada according to: • UL 429 (electrically operated valves) • CAN/CSA-C22.2 No. 139 - 19
	Optional (valid for coils): UL Hazardous Locations – Explosion Protection UL Listed for Hazardous Locations for USA and Canada Class I, Zone 1 Class I, Division 2, Group A, B, C and D Class II + III, Division 2, Group F and G
	Optional: UL Recognized for the USA and Canada The products are UL Recognized for the USA and Canada according to: • UL 429 (electrically operated valves) • CAN/CSA-C22.2 No. 139 - 19

3.6. Drinking water

Conformity	Description
	Suitable for use in drinking water applications The materials comply with the assessment principles (UBA) for materials in contact with drinking water (Trinkwasserv). **Brass body/stainless steel body:** PF36: Suitable for products with a maximum temperature of + 60 °C (warm water)

3.7. Foods and beverages/Hygiene

Conformity	Description
FDA	**FDA – Code of Federal Regulations (valid for the variable code PL03)** All wetted materials are compliant with the Code of Federal Regulations published by the FDA (Food and Drug Administration, USA) according to the manufacturer's declaration.
USP	**United States Pharmacopeial Convention (USP) (valid for the variable code PL04)** All wetted materials are biocompatible according to the manufacturer's declaration.

DTS 1000089742 EN Version: AU Status: RL (released | freigegeben | valide) printed: 21.05.2026

valvesgo.com

3.8. Others

Oxygen

Conformity	Description
O_2	**Optional: Suitability for oxygen (valid for the variable code NL02)** The products are suitable for use with gaseous oxygen, according to the manufacturer's declaration.

Fire protection on railway vehicles

Approval	Description
DIN EN 45545	**Optional: Fire protection on railway vehicles in accordance with DIN EN 45545 applicable parts 2 and 5: requirements for fire behaviour of materials and components** The products comply with the fire protection requirements in accordance with applicable parts 2 and 5 of DIN EN 45545 for use in the interior of railway vehicles for operating classes 1 - 3 (OC1 - 3) in conjunction with hazard levels 1 - 2 (HL1 - 2) in accordance with the manufacturer's declaration.

Safety shut-off valves

Approval	Description
DIN Geprüft	**Safety shut-off valves as a piece of equipment with safety function according to DIN EN ISO 23553 - 1 (valid for the variable code PF15)** The automatic and semi-automatic valves are suitable for use with oil, according to the manufacturer's declaration.

Fuel gases

Conformity	Description
CE	**Fuel gases (valid for the variable code PO19)** The products comply with: • Regulation (EU) 2016/426 – Appliances burning gaseous fuels and • DVGW DIN EN 161 (Automatic shut-off valves for gas burners and gas appliances) and • DIN EN 16678, Class A or Class D (Safety and control devices for gas burners and gas burning appliances – Automatic shut-off valves for operating pressure of above 500 kPa up to and including 6300 kPa)
DVGW	**Optional: DIN EN 549:2023 - 07 certification** The wetted valve seals are compliant with DIN EN 549:2023 - 07 (Rubber materials for seals and diaphragms for gas appliances and gas equipment) for medium temperatures of - 20 °C...+ 125 °C.

DTS 1000089742 EN Version: AU Status: RL (released | freigegeben | valide) printed: 21.05.2026

valvesgo.com

4. Materials

4.1. Bürkert resistApp

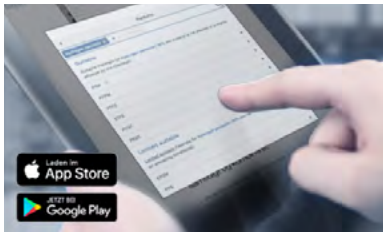

Bürkert resistApp – Chemical resistance chart

You want to ensure the reliability and durability of the materials in your individual application case? Verify your combination of media and materials on our website or in our resistApp.

Start chemical resistance check

4.2. Standard variant

Elastomer seal variant up to 30 bar

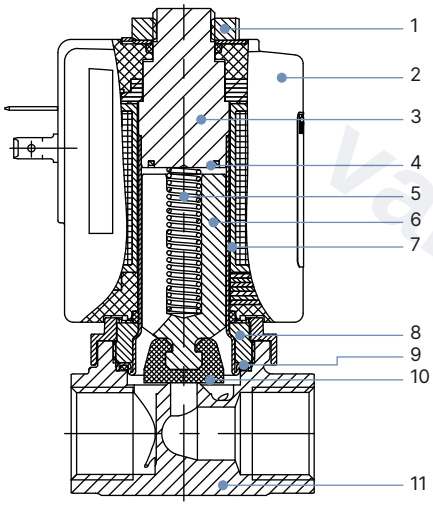

No.	Element	Material
1	Nut	DIN 176 thick-film passivated or stainless steel
2	Coil	Epoxy
3	Stopper	Stainless steel 1.4113/434 [1.)]
4	Shading ring	Copper (brass body) Silver (stainless steel body)
5	Spring	Stainless steel 1.4310/301 [1.)]
6	Plunger	Stainless steel 1.4113/434 [1.)]
7	Guide tube	Stainless steel 1.4303/305/308 [1.)]
8	Nipple	Brass, stainless steel 1.4305/303 [1.)]
9	Seal	FKM, PEEK (EPDM on request)
10	Seat seal	FKM (EPDM on request)
11	Housing	Brass, stainless steel 1.4404/316L [1.)] (CF3M)

1.) Material designation according to AISI

Variant with increased lifespan (NF39)

Note:
All parts are the same as standard, but with two additional parts as follows.

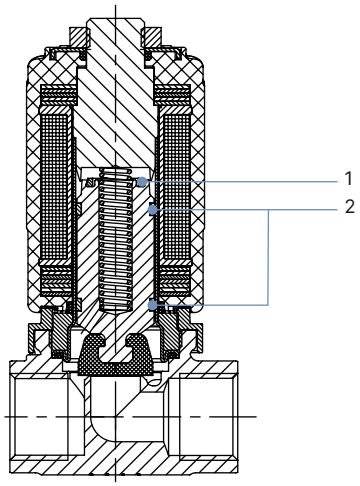

No.	Element	Material
1	Damping ring	PEEK
2	Glider	PTFE carbon filled

DTS 1000089742 EN Version: AU Status: RL (released | freigegeben | valide) printed: 21.05.2026

valvesgo.com

Variant PTFE pendulum seal up to 100 bar

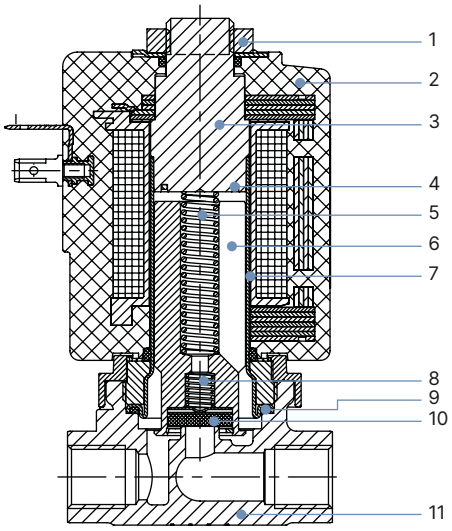

No.	Element	Material
1	Nut	DIN 176 thick-film passivated or stainless steel
2	Coil	Epoxy
3	Stopper	Stainless steel 1.4113 [1.)]
4	Shading ring	Silver (stainless steel body)
5	Spring	Stainless steel 1.4310/301 [1.)]
6	Core	Stainless steel 1.4113/434 [1.)]
7	Guide tube	Stainless steel 1.4303/305/308 [1.)]
8	Spring	Stainless steel 1.4310/301 [1.)]
9	Seat	FKM, PEEK (EPDM on request)
10	Seat seal	PTFE pendulum seal
11	Housing	Brass, stainless steel 1.4404/316L [1.)] (CF3M)

1.) Material designation according to AISI

4.3. High pressure variant up to 250 bar or 160 bar

Note:
High pressure variant from 135 bar, circuit function A

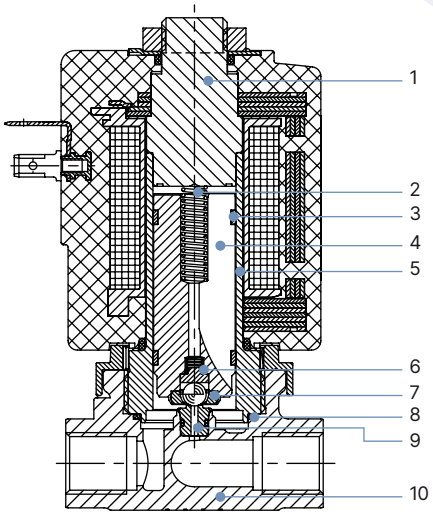

No.	Element	Material
1	Stopper	Stainless steel 1.4523/316 [1.)]
2	Compression springs	Stainless steel 1.4310/301 [1.)]
3	Glider	PTFE
4	Plunger	Stainless steel 1.4113/434 [1.)]
5	Armature guide tube	Stainless steel 1.4571/316 Ti [1.)]
6	Ball seat	Stainless steel 1.4305/303 [1.)]
7	Seat seal	Ceramic ball
8	O-ring	FKM
9	Seat	PEEK
10	Housing	Stainless steel 1.4404/316L [1.)] (CF3M) only in ¼" G and NPT

1.) Material designation according to AISI

DTS 1000089742 EN Version: AU Status: RL (released | freigegeben | valide) printed: 21.05.2026

valvesgo.com

4.4. Variant DN 13

Variant DN 13 standard

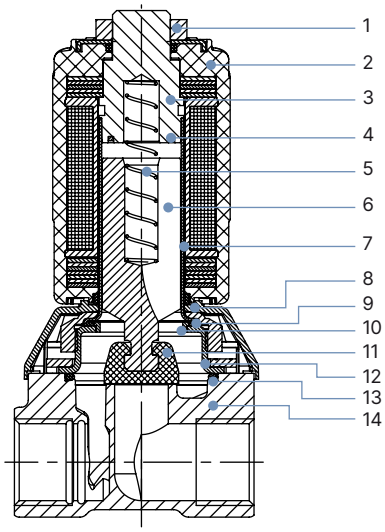

No.	Element	Material
1	Nut	DIN 176 thick-film passivated or stainless steel
2	Coil	Epoxy
3	Stopper	Stainless steel 1.4113/434 1.)
4	Shading ring	Copper (brass body) Silver (stainless steel body)
5	Spring	Stainless steel 1.4310/301 1.)
6	Core	Stainless steel 1.4113/434 1.)
7	Guide tube	Stainless steel 1.4303/305 1.)/308 1.)
8	Hood	PA6
9	Seal	FKM, EPDM
10	Support ring	PPS Fortron
11	Core seal	FKM, EPDM, NBR
12	Cover	DN 10...DN 25 stainless steel 1.4301/304 1.)
13	Seal	FKM, EPDM
14	Housing	Brass, stainless steel 1.4408/316 1.)

1.) Material designation according to AISI

Variant DN 13 with increased lifespan (NF39)

Note:
All parts are the same as standard, but with two additional parts as follows.

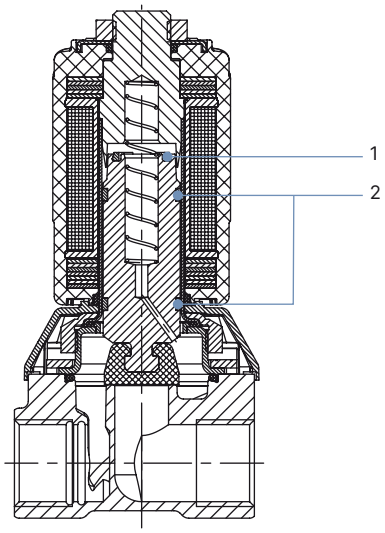

No.	Element	Material
1	Damping ring	PEEK
2	Glider	PTFE carbon filled

DTS 1000089742 EN Version: AU Status: RL (released | freigegeben | valide) printed: 21.05.2026

valvesgo.com

4.5. Oil burner variant (PF15)

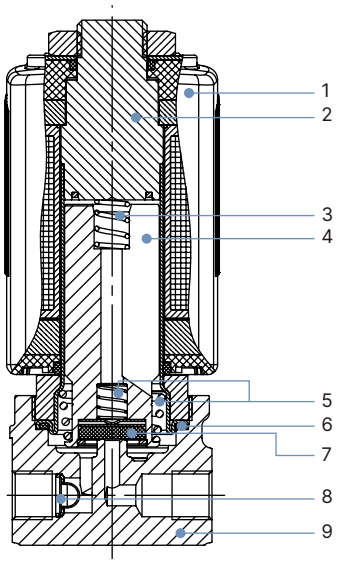

No.	Element	Material
1	Coil	Epoxy
2	Stopper	Stainless steel 1.4113/434 [1.)]
3	Spring	Stainless steel 1.4310/301 [1.)]
4	Plunger	Stainless steel 1.4105/430F [1.)]
5	Spring	Stainless steel 1.4310/301 [1.)]
6	Seal ring	FKM
7	Seat seal	PTFE
8	Strainer	Stainless steel only DN 3 and DN 3.5
9	Valve body	Brass

1.) Material designation according to AISI

DTS 1000089742 EN Version: AU Status: RL (released | freigegeben | valide) printed: 21.05.2026

valvesgo.com

valvesgo.com

5. Dimensions

5.1. Standard variant

Threaded variant

Note:
Dimensions in mm

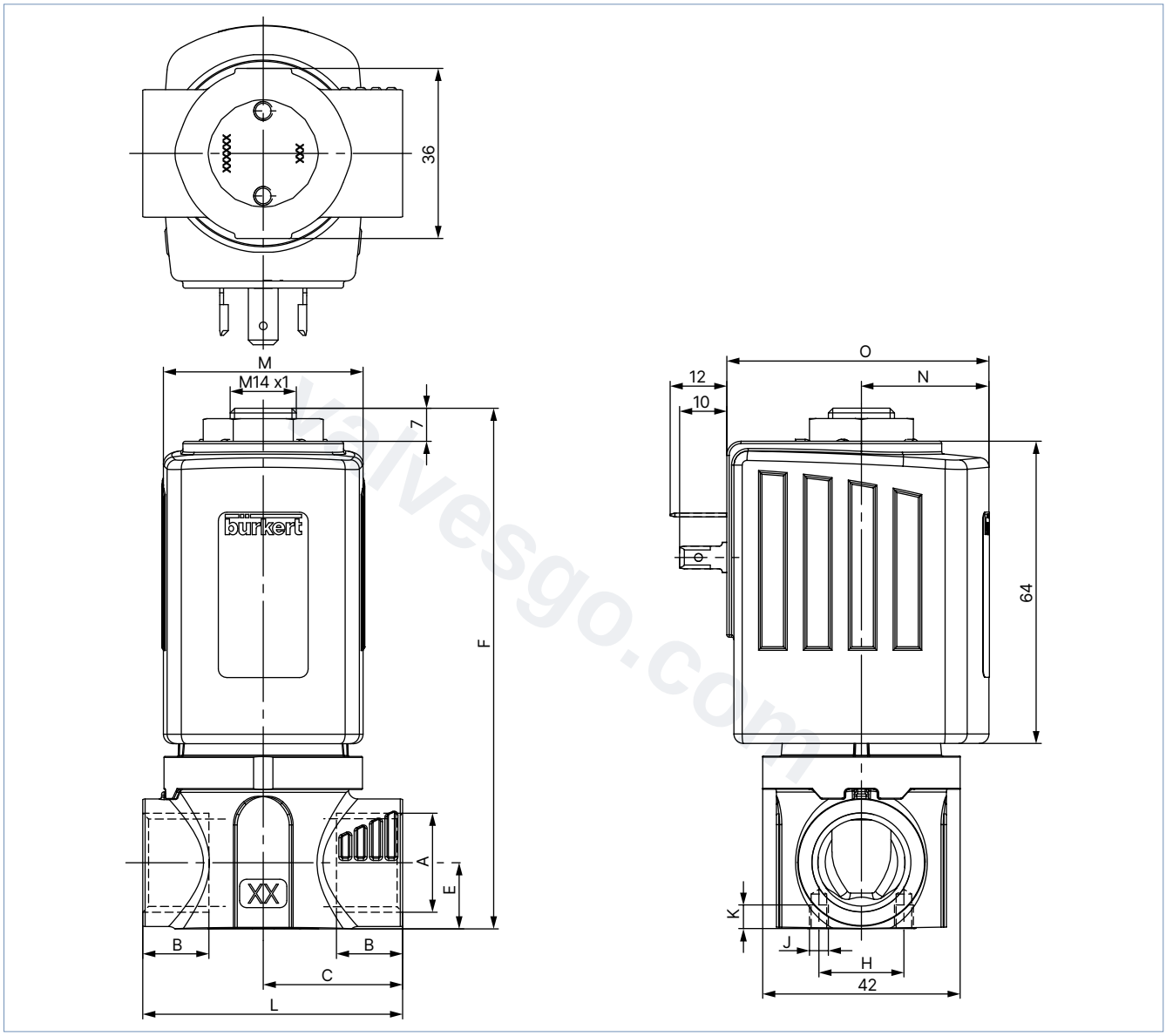

Variant	A	B	C	E	F	H	J	K	L
		[mm]	[mm]	[mm]	[mm]	[mm]		[mm]	[mm]
Standard	Rc ½	13.2	29.5	14	110	18	M4	5	55
	NPT ½	13.7							
	G ½	14							
	Rc ⅜	10.1	27.5	12	108	18	M4	5	55
	NPT ⅜	10.3							
	G ⅜	12							
	Rc ¼	9.7	27.5	10	105	18	M4	5	55
	NPT ¼	10							
	G ¼	12							

DTS 1000089742 EN Version: AU Status: RL (released | freigegeben | valide) printed: 21.05.2026

valvesgo.com

Variant	A	B	C	E	F	H	J	K	L
		[mm]	[mm]	[mm]	[mm]	[mm]		[mm]	[mm]
AG39	G ½	14.5	37.5	14	110	–	–	–	75
	G ⅜	12	37.5	14	110	–	–	–	75
AG48	G ¼	12	20	10	105	15	M5	7	40
	G ⅛	8	20	10	105	15	M5	7	40

Coil size	M	N	O
	[mm]	[mm]	[mm]
L	65	37.5	72
K	42	27	55.5

Flange and screw-in variant

Note:
Dimensions in mm

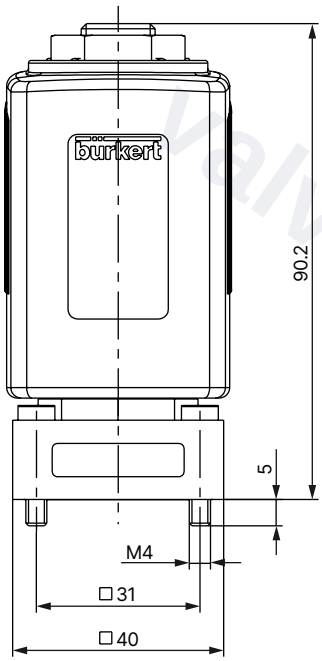

Connection outline

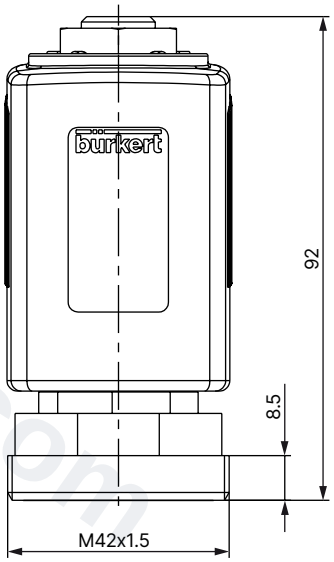

Connection outline

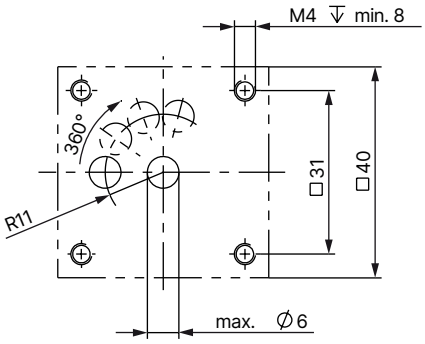

Flange version concentric (FK09)

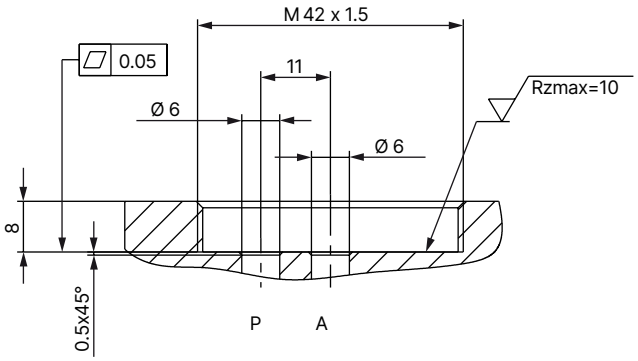

Screw-in version concentric (FK01)

DTS 1000089742 EN Version: AU Status: RL (released | freigegeben | valide) printed: 21.05.2026

valvesgo.com

Flange and screw-in variant high pressure up to 250 bar or 160 bar

Note:
Dimensions in mm

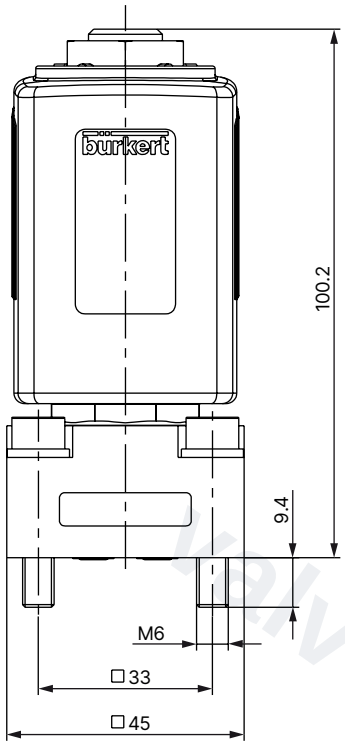

Connection outline

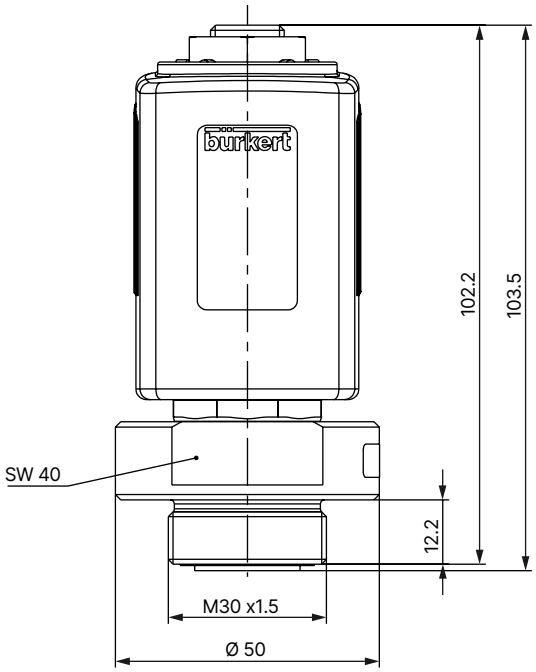

Connection outline
M 2:1

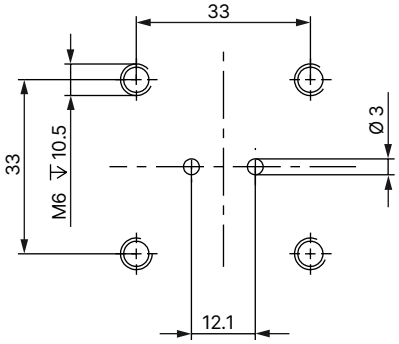

Flange version high pressure (FB50)

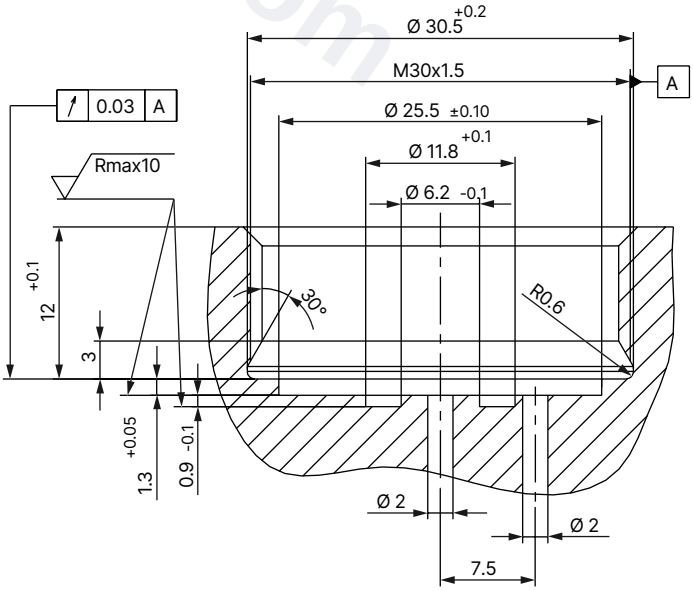

Screw-in version high pressure (FK12)

DTS 1000089742 EN Version: AU Status: RL (released | freigegeben | valide) printed: 21.05.2026

valvesgo.com

5.2. Variant DN 13

Note:
Dimensions in mm

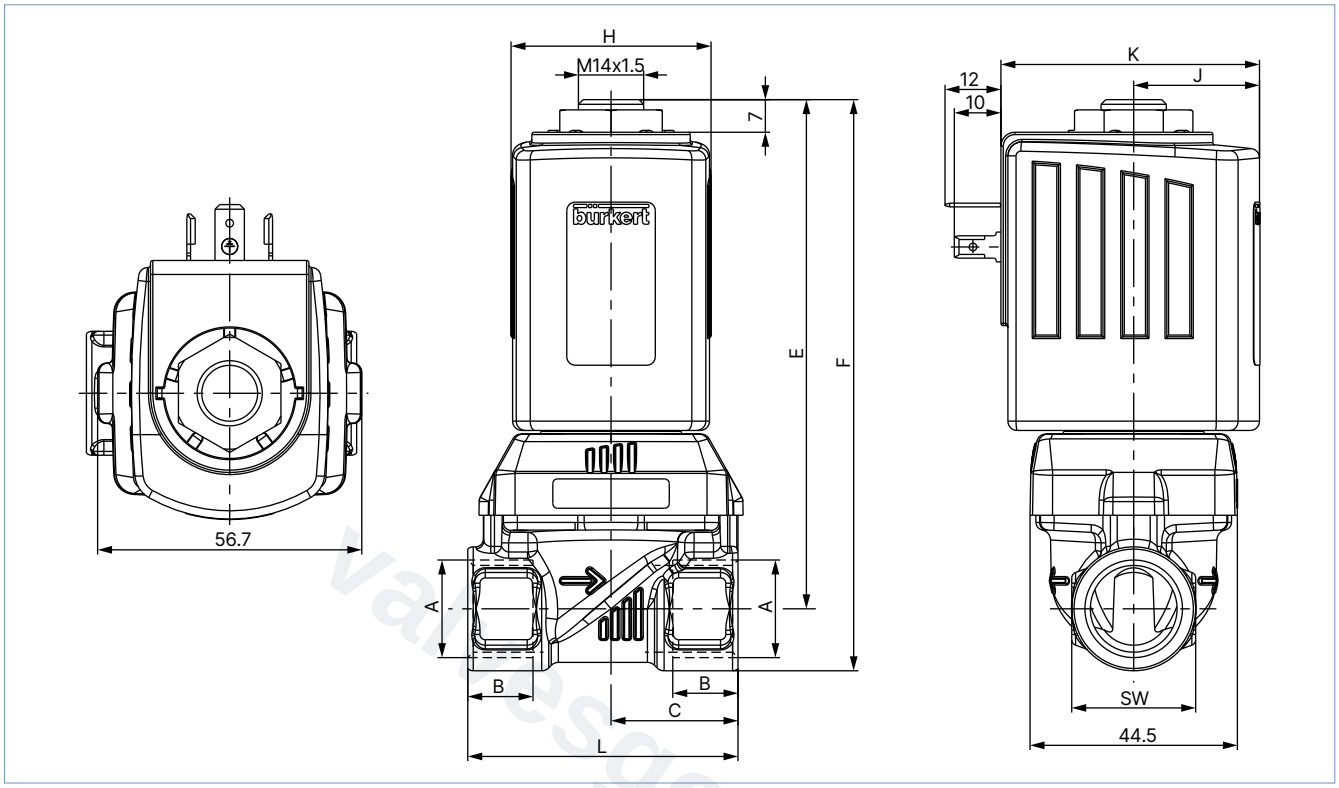

Body material	A	B	C	E	F	L	SW
		[mm]	[mm]	[mm]	[mm]	[mm]	[mm]
Brass / Stainless steel	Rc ¾	14.5	32.5	111.3	127.3	65	32
	NPT ¾	14					
	G ¾	16					
Stainless steel	Rc ½	13.2	32.5	109.3	122.6	65	27
	NPT ½	13.7					
	G ½	14					
Brass	Rc ½	13.2	27.25	109.3	122.6	58	27
	NPT ½	13.7					
	G ½	14					

Coil size	H	J	K
	[mm]	[mm]	[mm]
L	65	37.5	72
K	42	27	55.5

DTS 1000089742 EN Version: AU Status: RL (released | freigegeben | valide) printed: 21.05.2026

valvesgo.com

5.3. Oil burner variant (PF15)

Note:
Dimensions in mm

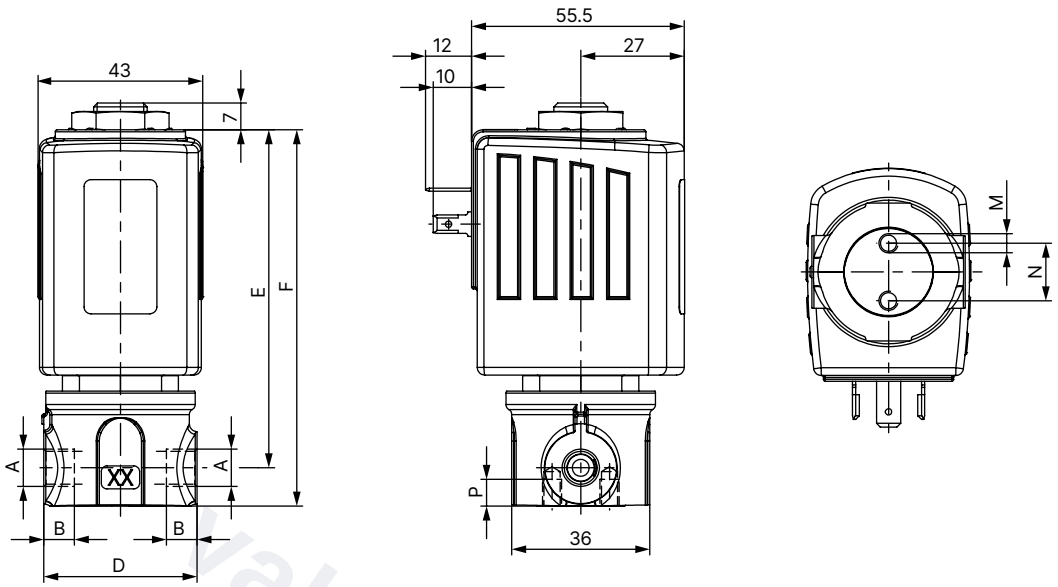

DN	Function	A	B	D	E	F	M	N	P	SW
			[mm]	[mm]	[mm]	[mm]		[mm]	[mm]	[mm]
2.2	NO	G ⅛	8	40	88.2	98.2	M5	15	7	–
	NO	G ¼	12							
3	NC	G ⅛	8	40	88.2	98.2	M5	15	7	–
3.5	NC	G ¼	12	40	88.2	98.2	M5	15	7	–
10	NC	G ⅜	12	75	89.2	103.2	–	–	–	27
	NC	G ½	14.5							

DTS 1000089742 EN Version: AU Status: RL (released | freigegeben | valide) printed: 21.05.2026

valvesgo.com

5.4. UL Listed coil for hazardous locations, Class I, Division 2

Note:

- Dimensions in mm
- The dimensions only apply to the Ex variant of the solenoid coil. See the variants listed above for all other dimensions.

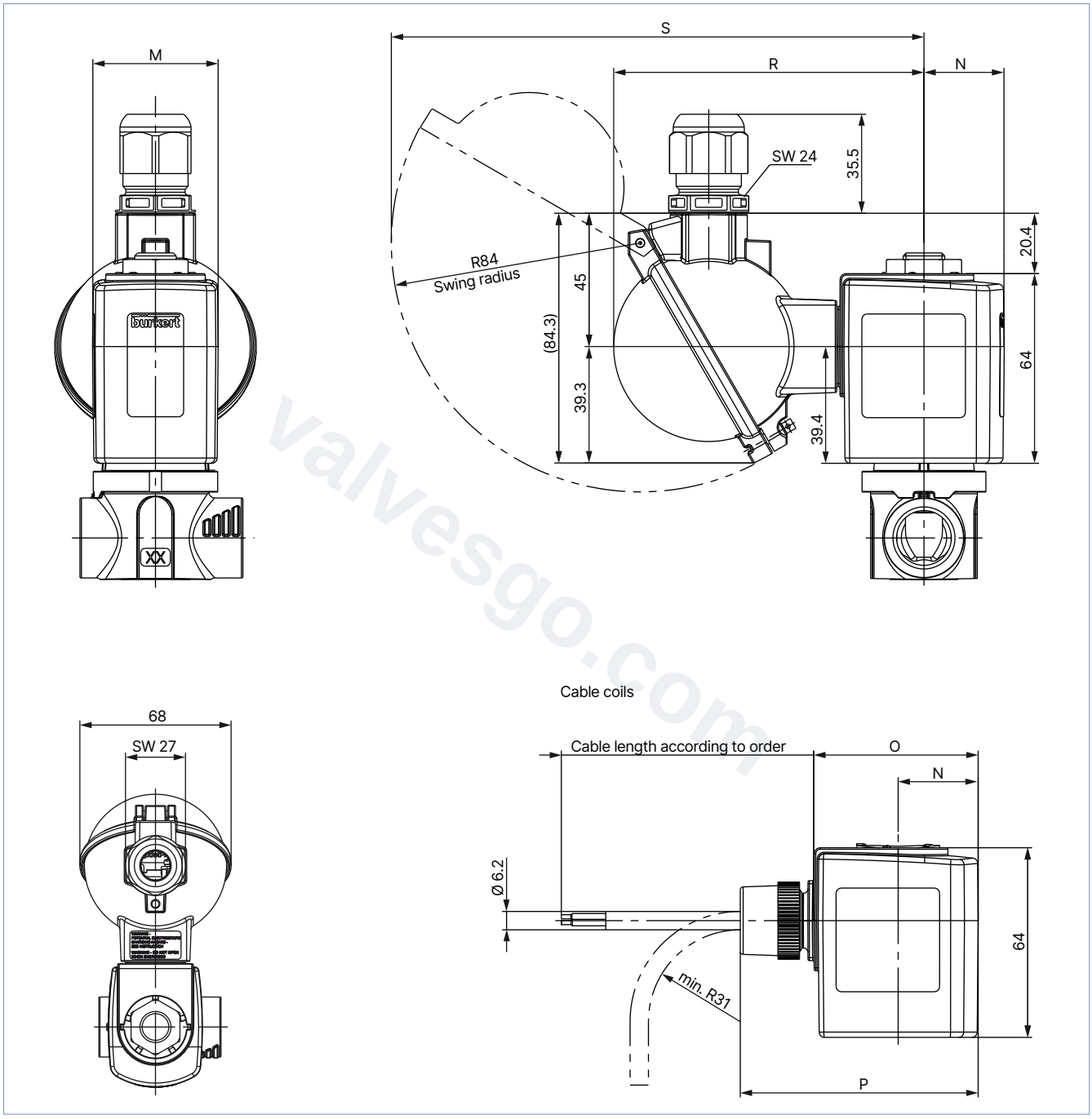

Coil size	M	N	O	P	R	S
	[mm]	[mm]	[mm]	[mm]	[mm]	[mm]
L	65	37.5	72	97	110.8	185.8
K	42	27	55.5	80.3	104.8	179.8

DTS 1000089742 EN Version: AU Status: RL (released | freigegeben | valide) printed: 21.05.2026

valvesgo.com

6. Performance specifications

6.1. Power consumption

Coil size	AC			DC		Kick and Drop coil AC/DC [1.)]		
	Inrush power	Holding power		Cold performance	Warm performance	Cold performance inrush power	Cold performance holding power	Warm performance holding power
[mm]	[VA]	[VA]	[W]	[W]	[W]	[W] 500 ms	[W]	[W]
42 (K)	150	37	16	21	16	85	8.5	7
42 (K) ATEX	–	–	–	15	12	44	6.5	5.5
65 (L)	–	–	–	28	21	–	–	–

1.) Kick and Drop coil: Integrated electronics for short-term power increase and reduction in dual coil technology

6.2. Ambient temperatures with Kick and Drop coils

Coil type	Coil size	Maximum ambient temperatures [1.)] depending on the switching cycles per minute		
	[mm]	Performance	30 switching cycles/min.	1 switching cycle/min.
AC10	40 (6)	20 W / 2 W	Max. + 70 °C	Max. + 85 °C
		65 W / 7 W	Max. + 55 °C	Max. + 70 °C

Coil type	Coil size	Maximum ambient temperatures [1.)] depending on the switching cycles per minute		
	[mm]	Performance	10 switching cycles/min.	1 switching cycle/min.
AC19	42 (K)	44 W / 6.5 W	Max. + 65 °C	Max. + 70 °C
	42 (K) ATEX	44 W / 6.5 W	Max. + 65 °C	Max. + 70 °C
	42 (K)	85 W / 8.5 W	Max. + 55 °C	Max. + 60 °C

1.) The temperature specifications correspond to the specified switchable differential pressures. Higher temperatures are possible on request, depending on the differential pressure, duty cycle and number of switching operations

7. Product accessories

7.1. Cable glands for ATEX/IECEx terminal box

Note:
A polyamide cable gland is included in the scope of delivery. A nickel-plated brass variant can be ordered for a surcharge, see **"Cable glands for ATEX/IECEX terminal box" on page 31**.

Description	Ex approval		Dimensions	
	Certification	Identification		
Ex cable gland, nickel-plated brass, 6...13 mm	PTB 04 ATEX 1112 X, IECEx PTB 13.0027X	II 2 G Ex e IIC Gb, II 2 D Ex tb IIIC Db IP68	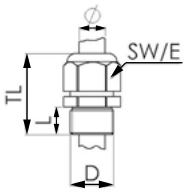	TL 29...37 mm L 6 mm D 20 mm SW 24 mm E 27 mm
Ex cable gland, polyamide, 7...13 mm	PTB 13 ATEX 1015 X, IECEx PTB 13.0034X	II 2 G Ex e IIC Gb, II 2 D Ex tb IIIC Db IP68	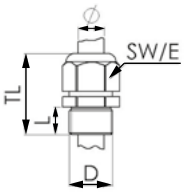	TL 36...45 mm L 10 mm D 20 mm SW 24 mm E 28 mm

DTS 1000089742 EN Version: AU Status: RL (released | freigegeben | valide) printed: 21.05.2026

valvesgo.com

7.2. Special tool to turn the terminal box

Note:
This special tool is not included in the scope of delivery of the valve, see "Cable glands for ATEX/IECEX terminal box" on page 31.

Description	Components of the set
Set SC02-AC10 	• Special tool • Service manual

8. Ordering information

8.1. Bürkert eShop

Bürkert eShop – Easy ordering and quick delivery

You want to find your desired Bürkert product or spare part quickly and order directly? Our online shop is available for you 24/7. Sign up and enjoy all the benefits.

Order online now

8.2. Bürkert product filter

Bürkert product filter – Get quickly to the right product

You want to select products comfortably based on your technical requirements?
Use the Bürkert product filter and find suitable articles for your application quickly and easily.

Try out our product filter

8.3. Bürkert Product Enquiry Form

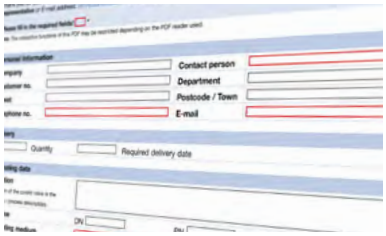

Bürkert Product Enquiry Form – Your enquiry quickly and compactly

Would you like to make a specific product enquiry based on your technical requirements? Use our Product Enquiry Form for this purpose. There you will find all the relevant information for your Bürkert contact. This will enable us to provide you with the best possible advice.

Fill out the form now

DTS 1000089742 EN Version: AU Status: RL (released | freigegeben | valide) printed: 21.05.2026

valvesgo.com

8.4. Ordering chart standard variant elastomer seal up to 30 bar

Note:
Further variants with alternative voltages, NPT or RC inner thread, as flange or screw-in variant, seal material EPDM/EPDM (only CF A) are available on request.

Circuit function	Port connection	Orifice	K_v value water	Pressure range						Article no.		
				Water		Oil		Air		024/DC	024/50	230/50
				DC	AC	DC	AC	DC	AC			
		[mm]	[m³/h]	[bar]	[bar]	[bar]	[bar]	[bar]	[bar]	[V/Hz]	[V/Hz]	[V/Hz]
Housing material brass, G inner thread, seal material FKM/FKM												
CF A 2/2-way solenoid valve Direct-acting Normally closed 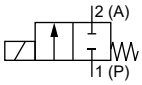	G ¼	3.0	0.28	0...30	0...25	0...30	0...25	0...30	0...30	178295	178296	178297
		4.0	0.54	0...16	0...16	0...16	0...16	0...25	0...16	178299	178300	178301
		5.0	0.73	0...8	0...10	0...6	0...10	0...8	0...10	178303	178304	178305
		6.0	0.95	0...4	0...6	0...3	0...6	0...4	0...6	178307	178308	178309
	G ⅜	3.0	0.28	0...30	0...25	0...30	0...25	0...30	0...30	178311	178312	178313
		4.0	0.54	0...16	0...16	0...16	0...16	0...25	0...16	178315	178316	178317
		5.0	0.73	0...8	0...10	0...6	0...10	0...8	0...10	178319	178320	178321
		6.0	0.95	0...4	0...6	0...3	0...6	0...4	0...6	178323	178324	178325
		8.0	1.6	0...2	0...3	0...2	0...3	0...2	0...3.5	386836	178328	178329
	G ½	6.0	0.95	0...4	0...6	0...3	0...6	0...4	0...6	178331	178332	178333
		8.0	1.6	0...2	0...3	0...2	0...3	0...2	0...3.5	386839	178336	178337
		10.0	1.8	0...1.5	0...2	0...1.5	0...2	0...1.5	0...2	261254	178340	178341
CF B 2/2-way solenoid valve Direct-acting Normally open 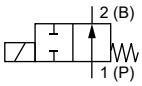	G ¼	3.0	0.28	0...13	0...13	0...13	0...13	0...16	0...16	20011134	o. r.	20011136
		4.0	0.54	0...10	0...10	0...10	0...10	0...10	0...10	20011146	o. r.	20011147
		6.0	0.95	0...6	0...6	0...6	0...6	0...6	0...6	20011180	o. r.	20011181
	G ⅜	6.0	0.95	0...6	0...6	0...6	0...6	0...6	0...6	20011183	20011182	20011184
		8.0	1.6	0...3	0...3	0...3	0...3	0...3	0...3	228500	228501	228502
	G ½	8.0	1.6	0...3	0...3	0...3	0...3	0...3	0...3	211916	228503	228504
		10.0	1.8	0...2	0...2	0...2	0...2	0...2	0...2	210436	219530	210438
Housing material stainless steel, G inner thread, seal material FKM/FKM												
CF A 2/2-way solenoid valve Direct-acting Normally closed 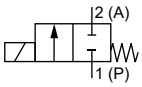	G ¼	3.0	0.28	0...30	0...25	0...30	0...25	0...30	0...30	178239	178240	178241
		4.0	0.54	0...16	0...16	0...16	0...16	0...25	0...16	178243	178244	178245
		5.0	0.73	0...8	0...10	0...6	0...10	0...8	0...10	178247	178248	178249
		6.0	0.95	0...4	0...6	0...3	0...6	0...4	0...6	178251	178252	178253
	G ⅜	3.0	0.28	0...30	0...25	0...30	0...25	0...30	0...30	178255	178256	178257
		4.0	0.54	0...16	0...16	0...16	0...16	0...25	0...16	178259	178260	178261
		5.0	0.73	0...8	0...10	0...6	0...10	0...8	0...10	178263	178264	178265
		6.0	0.95	0...4	0...6	0...3	0...6	0...4	0...6	178267	178268	178269
		8.0	1.6	0...2	0...3	0...2	0...3	0...2	0...3.5	386840	178272	178273
	G ½	6.0	0.95	0...4	0...6	0...3	0...6	0...4	0...6	178275	178276	178277
		8.0	1.6	0...2	0...3	0...2	0...3	0...2	0...3.5	298596	178280	178281
		10.0	1.8	0...1.5	0...2	0...1.5	0...2	0...1.5	0...2	386841	178284	178285
		12.0	2	0...0.8	0...1.2	0...0.8	0...1.2	0...0.8	0...1.5	245067	178288	178289
CF B 2/2-way solenoid valve Direct-acting Normally open 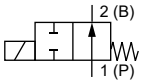	G ¼	3.0	0.28	0...13	0...13	0...13	0...13	0...16	0...16	20011137	o. r.	20011139
		4.0	0.54	0...10	0...10	0...10	0...10	0...10	0...10	20011151	o. r.	o. r.
		6.0	0.95	0...6	0...6	0...6	0...6	0...6	0...6	20011189	o. r.	o. r.
	G ⅜	6.0	0.95	0...6	0...6	0...6	0...6	0...6	0...6	20011192	20011191	20011193
		8.0	1.6	0...3	0...3	0...3	0...3	0...3	0...3	230258	230259	230260
	G ½	8.0	1.6	0...3	0...3	0...3	0...3	0...3	0...3	230261	230262	230263
		10.0	1.8	0...2	0...2	0...2	0...2	0...2	0...2	225248	230264	230265
		12.0	2	0...1	0...1	0...1	0...1	0...1	0...1	210441	230266	210321

o. r. = on request

DTS 1000089742 EN Version: AU Status: RL (released | freigegeben | valide) printed: 21.05.2026

valvesgo.com

Circuit function	Port connection	Orifice	K_v value water	Medium pressure Kick and Drop coil 44/6.5 W	Article no. Kick and Drop coil 44/6.5 W		Medium pressure Kick and Drop coil 85/8.5 W	Article no. Kick and Drop coil 85/8.5 W	
					024 / AC/ DC	230/AC		024 / AC/ DC	230/AC
		[mm]	[m³/h]	[bar]	[V/Hz]	[V/Hz]	[bar]	[V/Hz]	[V/Hz]
Housing material stainless steel, G inner thread, seal material FKM/FKM									
CF A 2/2-way solenoid valve Direct-acting Normally closed 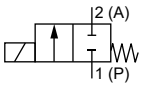	G ¼	4.0	0.54	0...30	386726	386732	0...30	–	–
		5.0	0.73	0...10	386727	386733	0...25	386739	386745
		6.0	0.95	0...6	386728	386734	0...14	386740	386746
	G ½	8.0	1.6	0...3	386729	386735	0...6	386741	386747
		10.0	1.8	0...2	386730	386736	0...3.5	386742	386748
		12.0	2	0...1.2	386731	386737	0...2	386743	386749

– = not available

8.5. Ordering chart standard variant pendulum seal up to 100 bar

Note:
Further variants with alternative voltages, NPT or RC inner thread, as flange or screw-in variant, seal material PTFE/FKM or PTFE/EPDM are available on request.

Circuit function	Port connection	Orifice	K_v value water	Pressure range						Article no.		
				Water		Oil		Air		024/DC	024/50	230/50
				DC	AC	DC	AC	DC	AC			
		[mm]	[m³/h]	[bar]	[bar]	[bar]	[bar]	[bar]	[bar]	[V/Hz]	[V/Hz]	[V/Hz]
Housing material brass, G inner thread, seal material PTFE/PEEK												
CF A 2/2-way solenoid valve Direct-acting Normally closed 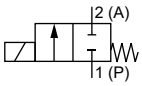	G ¼	2.0	0.14	0...100	0...75	0...100	0...75	0...100	0...100	o. r.	o. r.	o. r.
		3.0	0.28	0...40	0...50	0...40	0...50	0...40	0...50	262435	o. r.	338571
		4.0	0.54	0...20	0...30	0...20	0...30	0...20	0...30	206367	o. r.	319934
		6.0	0.95	0...5	0...12	0...5	0...12	0...5	0...16	257403	o. r.	o. r.
	G ⅜	4.0	0.54	0...20	0...30	0...20	0...30	0...20	0...30	263995	331984	317310
		6.0	0.95	0...5	0...12	0...5	0...12	0...5	0...16	187966	o. r.	208842
		8.0	1.6	0...2	0...5	0...2	0...5	0...2	0...5	386842	o. r.	362254
	G ½	6.0	0.95	0...5	0...12	0...5	0...12	0...5	0...16	260425	o. r.	o. r.
		8.0	1.6	0...2	0...5	0...2	0...5	0...2	0...5	386843	o. r.	o. r.
		10.0	1.8	0...1.2	0...2	0...1.2	0...2	0...1.2	0...3	298916	o. r.	362210
CF B 2/2-way solenoid valve Direct-acting Normally open 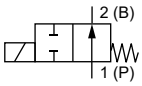	G ¼	2.0	0.14	0...30	0...30	0...30	0...30	0...30	0...30	o. r.	o. r.	o. r.
		3.0	0.28	0...16	0...16	0...16	0...16	0...16	0...16	20011131	o. r.	o. r.
		4.0	0.54	0...10	0...10	0...10	0...10	0...10	0...10	o. r.	o. r.	20011140
		6.0	0.95	0...6	0...6	0...6	0...6	0...6	0...6	o. r.	o. r.	o. r.
	G ⅜	4.0	0.54	0...10	0...10	0...10	0...10	0...10	0...10	o. r.	o. r.	o. r.
		6.0	0.95	0...6	0...6	0...6	0...6	0...6	0...6	20011160	o. r.	o. r.
	G ½	6.0	0.95	0...6	0...6	0...6	0...6	0...6	0...6	20011162	o. r.	o. r.
Housing material stainless steel, G inner thread, seal material PTFE/PEEK												
CF A 2/2-way solenoid valve Direct-acting Normally closed 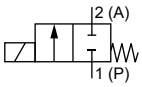	G ¼	2.0	0.14	0...100	0...100	0...100	0...75	0...100	0...100	184689	271441	184690
		3.0	0.28	0...40	0...50	0...40	0...50	0...40	0...50	247937	o. r.	o. r.
		4.0	0.54	0...20	0...30	0...20	0...30	0...20	0...30	184692	230667	184693
		6.0	0.95	0...5	0...12	0...5	0...12	0...5	0...16	300077	o. r.	304305
	G ⅜	4.0	0.54	0...20	0...30	0...20	0...30	0...20	0...30	292674	o. r.	o. r.
		6.0	0.95	0...5	0...12	0...5	0...12	0...5	0...16	184695	202757	184696
		8.0	1.6	0...2	0...5	0...2	0...5	0...2	0...5	386853	o. r.	184699
	G ½	6.0	0.95	0...5	0...12	0...5	0...12	0...5	0...16	259348	o. r.	280481
		8.0	1.6	0...2	0...5	0...2	0...5	0...2	0...5	386854	o. r.	o. r.
		10.0	1.8	0...1.2	0...2	0...1.2	0...2	0...1.2	0...3	386845	o. r.	184702
		12.0	2	0...0.8	0...1.2	0...0.8	0...1.2	0...0.8	0...2	242932	227982	184705

DTS 1000089742 EN Version: AU Status: RL (released | freigegeben | valide) printed: 21.05.2026

valvesgo.com

Circuit function	Port connection	Orifice	K_v value water	Pressure range						Article no.		
				Water		Oil		Air		024/DC	024/50	230/50
				DC	AC	DC	AC	DC	AC			
		[mm]	[m³/h]	[bar]	[bar]	[bar]	[bar]	[bar]	[bar]	[V/Hz]	[V/Hz]	[V/Hz]
CF B 2/2-way solenoid valve Direct-acting Normally open 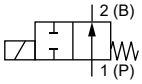	G ¼	1.5	0.07	0...60	0...60	0...60	0...60	0...60	0...60	20011122	o. r.	20011123
		2.0	0.14	0...30	0...30	0...30	0...30	0...30	0...30	20011130	o. r.	o. r.
		3.0	0.28	0...16	0...16	0...16	0...16	0...16	0...16	20011133	o. r.	o. r.
		4.0	0.54	0...10	0...10	0...10	0...10	0...10	0...10	20011141	o. r.	223726
		6.0	0.95	0...6	0...6	0...6	0...6	0...6	0...6	20011163	o. r.	o. r.
	G ⅜	4.0	0.54	0...10	0...10	0...10	0...10	0...10	0...10	o. r.	o. r.	o. r.
		6.0	0.95	0...6	0...6	0...6	0...6	0...6	0...6	20011164	o. r.	20011165
	G ½	6.0	0.95	0...6	0...6	0...6	0...6	0...6	0...6	o. r.	o. r.	o. r.

o. r. = on request

Circuit function	Port connection	Orifice	K_v value water	Medium pressure Kick and Drop coil 44/6.5 W	Article no. Kick and Drop coil 44/6.5 W		Medium pressure Kick and Drop coil 85/8.5 W	Article no. Kick and Drop coil 85/8.5 W	
					024 / AC/ DC	230/AC		024 / AC/ DC	230/AC
		[mm]	[m³/h]	[bar]	[V/Hz]	[V/Hz]	[bar]	[V/Hz]	[V/Hz]
Housing material stainless steel, G inner thread, seal material PTFE/PEEK									
CF A 2/2-way solenoid valve Direct-acting Normally closed 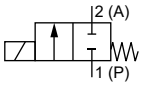	G ¼	3.0	0.28	0...50	386750	386756	0...80	386762	386768
		4.0	0.54	0...25	386751	386757	0...40	386763	386769
		6.0	0.95	0...6	386752	386758	0...12	386764	386770
	G ½	8.0	1.6	0...2.5	386753	386759	0...6	386765	386771
		10.0	1.8	0...1.5	386754	386760	0...3.5	386766	386772
		12.0	2	0...1.2	386755	386761	0...2	386767	386773

8.6. Ordering chart high pressure variant up to 250 bar or 160 bar

Note:
Further variants with alternative voltages, NPT or RC inner thread, as flange or screw-in variant, seal material PEEK/EPDM are available on request.

Circuit function	Port connection	Orifice	K_v value water	Pressure range						Article no.		
				Water		Oil		Air				
				DC	AC	DC	AC	DC	AC	024/DC	024/AC	230/AC
		[mm]	[m³/h]	[bar]	[bar]	[bar]	[bar]	[bar]	[bar]	[V/Hz]	[V/Hz]	[V/Hz]
Housing material stainless steel, G inner thread, seal material PEEK/FKM, cable head with integrated rectifier for AC part of delivery												
High pressure variant with ball sealing												
CF A 2/2-way solenoid valve Direct-acting Normally closed 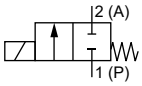	G ¼	1.0	0.03	0...250	0...250	0...250	0...250	0...250	0...250	265507	–	267229
				0...250	0...250	0...200	0...200	0...250	0...250	–	267226	–
		1.5	0.07	0...150	0...150	0...80	0...80	0...150	0...150	267217	–	267237
				0...150	0...150	0...70	0...70	0...150	0...150	–	267234	–
CF B 2/2-way solenoid valve Direct-acting Normally open 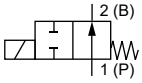	G ¼	1.0	0.03	0...200	0...200	0...150	0...150	0...250	0...250	269823	267219	267239
		1.5	0.07	0...100	0...100	0...80	0...80	0...130	0...130	269824	267240	271269

– = not available

DTS 1000089742 EN Version: AU Status: RL (released | freigegeben | valide) printed: 21.05.2026

valvesgo.com

8.7. Ordering chart variant DN 13 with increased lifespan (NF39)

Note:

- Further variants with alternative voltages, stainless steel body, ¾" connection, seal material EPDM/EPDM are available on request.
- The following applies to all subsequent values: orifice size 13 mm and K_v value water 4 m³/h.

Circuit function	Port connection	Orifice	K_v value water	Pressure range						Article no.		
				Water		Oil		Air				
				DC	AC	DC	AC	DC	AC	024/DC	024/AC	230/AC
		[mm]	[m³/h]	[bar]	[bar]	[bar]	[bar]	[bar]	[bar]	[V/Hz]	[V/Hz]	[V/Hz]
Housing material brass, seal material FKM/FKM												
For liquid and gaseous media												
CF A 2/2-way solenoid valve Direct-acting Normally closed 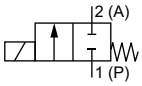	G ½	13.0	3	0...0.15	0...0.15	0...0.15	0...0.15	0...0.15	0...0.15	315080	315082	315084
				0...0.75	–	0...0.75	–	0...0.75	–	315088	–	–
	NPT ½	13.0	3	0...0.15	0...0.15	0...0.15	0...0.15	0...0.15	0...0.15	315095	315097	315100
				0...0.75	–	0...0.75	–	0...0.75	–	315102	–	–

– = not available

8.8. Ordering chart DIN EN 161 (PO19) certification variant

Note:

- Materials and dimensions for DN 4...DN 12 see "4.2. Standard variant" on page 8, for DN 13 see "4.4. Variant DN 13" on page 10.
- Further variants with alternative voltages, brass housing, ¼" or ¾" connection are available on request.

Circuit function	Port connection	Orifice	K_v value water	Pressure range		Seal material	Coil size	Article no.		
				Gas						
				DC	AC			024/DC	024/AC	230/AC
		[mm]	[m³/h]	[bar]	[bar]		[mm]	[V/Hz]	[V/Hz]	[V/Hz]
Housing material stainless steel, G inner thread, seal material NBR/NBR or FKM/FKM optional, cable head with integrated rectifier for AC included.										
Automatic shut-off valves for gas burners with sliding rings and damping disk										
CF A 2/2-way solenoid valve Direct-acting Normally closed 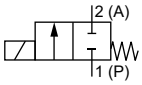	G ⅜	4.0	0.54	0...6	0...10	FKM	42	322103	o. r.	o. r.
				0...15	–	NBR	65	322105	–	–
	G ⅜	6.0	0.95	0...2.5	0...2.5	FKM	42	o. r.	o. r.	o. r.
				0...7.5	–	NBR	65	o. r.	–	–
	G ½	8.0	1.2	0...1.3	0...1.3	FKM	42	322107	o. r.	o. r.
				0...4	–	NBR	65	322109	–	–
	G ½	10.0	1.8	0...0.5	0...0.5	FKM	42	o. r.	o. r.	o. r.
				0...1.8	–	NBR	65	o. r.	–	–
	G ½	12.0	2.0	0...0.4	0...0.4	FKM	42	o. r.	o. r.	o. r.
				0...1.4	–	NBR	65	o. r.	–	–
	G ½	13.0	3.0	0...0.15	0...0.15	FKM	42	322110	o. r.	o. r.
				0...0.75	–	NBR	65	322112	–	–

o. r. = on request
– = not available

DTS 1000089742 EN Version: AU Status: RL (released | freigegeben | valide) printed: 21.05.2026

valvesgo.com

Circuit function	Port connection	Orifice	K_V value water	Pressure range Gas / AC	Seal material	Coil size	Article no. 024/DC	Article no. 230/50
		[mm]	[m³/h]	[bar]		[mm]	[V/Hz]	[V/Hz]
Housing material brass, G inner thread, seal material NBR/NBR								
Automatic shut-off valves for gas burners								
CF A 2/2-way solenoid valve Direct-acting Normally closed 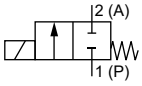	G ⅜	4.0	0.54	0...13	NBR	42	o. r.	322106
	G ½	6.0	0.95	0...5.5	NBR	42	o. r.	291453
	G ½	8.0	1.4	0...2.3	NBR	42	o. r.	270994
	G ½	10.0	1.8	0...1.3	NBR	42	o. r.	267347
	G ½	13.0	3.0	0...0.5	NBR	42	o. r.	–

o. r. = on request
– = not available

8.9. Ordering chart oil burner variant (PF15)

Flow valve/return valve combinations

If the oil burner is designed with a return nozzle and without a nozzle shut-off valve (see DIN EN 267), flow and return valves with safety shut-off function are required. The following combinations are possible:

Feed line valve				Return line valve			
Type	Orifice [mm]	Housing material	K_V value water [m³/h]	Type	Orifice [mm]	Housing material	K_V value water [m³/h]
6027	3	Brass/stainless steel	0.22	6027	3	Brass/stainless steel	0.18
6027	3.5	Brass/stainless steel	0.38	6027	3.5	Brass/stainless steel	0.35
5406 1.)	13	Brass	3.5	6027	10	Brass	1.8
5406 1.)	20	Stainless steel	6.3	5407 2.)	20	Stainless steel	4.7

1.) See data sheet **Type 5406** ▸ solenoid valve safety shut off valve for oil burner
2.) See data sheet **Type 5407** ▸ solenoid valve safety shut off valve for oil burner

Note:
Further variants with alternative voltages, frequencies and thread connections are available on request.

Circuit function	Port connection	Orifice	K_V value water	Applications	Closing times	Electrical power Operation	Electrical power Inrush	Pressure range Oil Differential pressure	Pressure range Oil Static pressure	Article no. 110...120/50	Article no. 220...240/50
		[mm]	[m³/h]		[ms]	[W]	[VA]	[bar]	[bar]	[V/Hz]	[V/Hz]
Housing material brass, G inner thread, seal material PTFE/FKM											
DIN EN ISO 23553 - 1 Safety isolating equipment for liquid fuels PF15											
CF A 2/2-way solenoid valve Direct-acting Normally closed 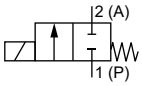	G ⅛	3.0	0.22 0.18	Feed line Return line	30	20	120	0...30	30	322828	322829
	G ¼	3.0	0.22 0.18	Feed line Return line	30	20	120	0...30	30	o. r.	322830
		3.5	0.38	Feed line Return line	30	20	180	0...30	30	301016	284833
	G ⅜	10.0	2	Return line	50	20	180	–	30	o. r.	o. r.
	G ½	10.0	2	Return line	50	20	180	–	30	281947	281948

DTS 1000089742 EN Version: AU Status: RL (released | freigegeben | valide) printed: 21.05.2026

valvesgo.com

Circuit function	Port connection	Orifice	K_V value water	Appli-cations	Closing times	Electrical power		Pressure range Oil		Article no.	
						Opera-tion	Inrush	Differ-ential pres-sure	Static pres-sure	110...120/50	220...240/50
		[mm]	[m³/h]		[ms]	[W]	[VA]	[bar]	[bar]	[V/Hz]	[V/Hz]
CF B 2/2-way solenoid valve Direct-acting Normally open 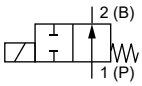	G ¼	2.2	0.16	circulation line	30	20	120	0...30	30	301018	261036

o. r. = on request

8.10. Ordering charts ATEX/IECEx variant with 3 meter cable

Standard variant with elastomer seal up to 30 bar

Note:

- Further variants with circuit function B, alternative voltages, stainless steel body, NPT or RC inner thread, seal material EPDM/EPDM are available on request.
- The Kick and Drop coil features integrated electronics for short-term power increase and decrease in double-coil technology.

Circuit function	Port connection	Orifice	K_V value water	Medium pressure standard	Article no.		Medium pressure Kick and Drop coil	Article no. Kick and Drop coil	
					024 / AC/ DC	230 / AC/ DC		024 / AC/ DC	230/AC
		[mm]	[m³/h]	[bar]	[V/Hz]	[V/Hz]	[bar]	[V/Hz]	[V/Hz]
Body material brass with G inner thread, seal material FKM/FKM									
CF A 2/2-way solenoid valve Direct-acting Normally closed 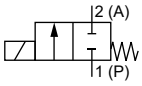	G ¼	3.0	0.28	0...25	o. r.	o. r.	0...30	o. r.	o. r.
		4.0	0.54	0...10	o. r.	o. r.	0...30	o. r.	o. r.
		5.0	0.73	0...3	o. r.	380761	0...10	o. r.	o. r.
		6.0	0.95	0...1.5	o. r.	380769	0...6	o. r.	o. r.
	G ½	8.0	1.6	0...1	o. r.	o. r.	0...3	380779	380780
		10.0	1.8	0...0.6	380786	380787	0...2	o. r.	o. r.

o. r. = on request

DTS 1000089742 EN Version: AU Status: RL (released | freigegeben | valide) printed: 21.05.2026

valvesgo.com

Standard variant with pendulum seal up to 100 bar

Note:

- Further variants with circuit function B, alternative voltages, brass housing, NPT or RC inner thread, seal material PTFE/FKM or PTFE/EPDM are available on request.
- The Kick and Drop coil features integrated electronics for short-term power increase and decrease in double-coil technology.

Circuit function	Port connection	Orifice	K_V value water	Medium pressure standard	Article no.		Medium pressure Kick and Drop coil	Article no. Kick and Drop coil	
					024 / AC/ DC	230 / AC/ DC		024 / AC/ DC	230/AC
		[mm]	[m³/h]	[bar]	[V/Hz]	[V/Hz]	[bar]	[V/Hz]	[V/Hz]
Body material stainless steel with G inner thread, seal material PTFE/PEEK									
CF A 2/2-way solenoid valve Direct-acting Normally closed 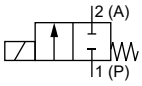	G ¼	2.0	0.14	0...60	380720	380722	0...100	o. r.	o. r.
		3.0	0.28	0...20	380734	o. r.	0...50	o. r.	o. r.
		4.0	0.54	0...8	380751	o. r.	0...25	o. r.	o. r.
	G ½	6.0	0.73	0...1.5	380765	380766	0...6	o. r.	o. r.
		8.0	0.95	0...0.8	o. r.	o. r.	0...2.5	o. r.	o. r.
		10.0	1.6	0...0.5	o. r.	o. r.	0...1.5	o. r.	o. r.
		12.0	1.8	0...0.3	o. r.	o. r.	0...1.2	o. r.	o. r.

o. r. = on request

Variant DN 13

Note:

- Further variants with alternative voltages, stainless steel body, NPT and RC inner thread, ¾" connection, seal material EPDM/EPDM or PTFE/PEEK are available on request.
- The Kick and Drop coil features integrated electronics for short-term power increase and decrease in double-coil technology.

Circuit function	Port connection	Orifice	K_V value water	Medium pressure Kick and Drop coil	Article no. Kick and Drop coil	
					024 / AC/DC	230/AC
		[mm]	[m³/h]	[bar]	[V/Hz]	[V/Hz]
Body material brass with G inner thread, seal material FKM/FKM						
CF A 2/2-way solenoid valve Direct-acting Normally closed 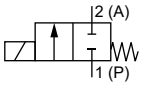	G ½	13.0	4	0...0.5	380791	380793

DTS 1000089742 EN Version: AU Status: RL (released | freigegeben | valide) printed: 21.05.2026

valvesgo.com

valvesgo.com

High pressure variant up to 250 bar or 160 bar

Note:

- Further variants with alternative voltages, NPT and RC inner thread, seal material PEEK/EPDM are available on request.
- The Kick and Drop coil features integrated electronics for short-term power increase and decrease in double-coil technology.

Circuit function	Port connection	Orifice	K_V value water	Medium pressure standard			Article no.		Medium pressure Kick and Drop coil			Article no. Kick and Drop coil	
				Water	Oil	Air	024 / AC/DC	230 / AC/DC	Water	Oil	Air	024 / AC/DC	230/AC
		[mm]	[m³/h]	[bar]	[bar]	[bar]	[V/Hz]	[V/Hz]	[bar]	[bar]	[bar]	[V/Hz]	[V/Hz]
Body material stainless steel with G inner thread, seal material PEEK/FKM													
CF A 2/2-way solenoid valve Direct-acting Normally closed 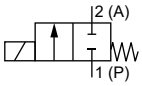	G ¼	1.0	0.03	0...200	0...150	0...250	380702	380706	0...250	0...250	0...250	380704	o. r.
		1.5	0.07	0...80	0...40	0...100	380708	380709	0...160	0...160	0...160	o. r.	o. r.
CF B 2/2-way solenoid valve Direct-acting Normally open 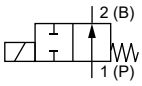	G ¼	1.0	0.03	–	–	–	–	–	0...200	0...160	0...250	380794	o. r.
		1.5	0.07	–	–	–	–	–	0...100	0...80	0...130	o. r.	o. r.

o. r. = on request
– = not available

8.11. Ordering chart ATEX/IECEx variant clamp terminal box

Standard variant with elastomer seal up to 30 bar

Note:

- Further variants with circuit function B, alternative voltages, stainless steel body, NPT or RC inner thread, seal material EPDM/EPDM are available on request.
- The Kick and Drop coil features integrated electronics for short-term power increase and decrease in double-coil technology.

Circuit function	Port connection	Orifice	K_V value water	Medium pressure standard	Article no.		Medium pressure Kick and Drop coil	Article no. Kick and Drop coil	
					024 / AC/ DC	230 / AC/ DC		024 / AC/ DC	230/AC
		[mm]	[m³/h]	[bar]	[V/Hz]	[V/Hz]	[bar]	[V/Hz]	[V/Hz]
Body material brass with G inner thread, seal material FKM/FKM									
CF A 2/2-way solenoid valve Direct-acting Normally closed 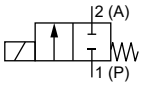	G ¼	3.0	0.28	0...25	o. r.	o. r.	0...30	o. r.	o. r.
		4.0	0.54	0...10	o. r.	o. r.	0...30	380753	o. r.
		5.0	0.73	0...3	380759	380760	0...10	o. r.	o. r.
	G ½	6.0	0.95	0...1.5	380770	380771	0...6	o. r.	o. r.
		8.0	1.6	0...1	o. r.	o. r.	0...3	o. r.	o. r.
		10.0	1.8	0...0.6	380785	380802	0...2	o. r.	o. r.

o. r. = on request

DTS 1000089742 EN Version: AU Status: RL (released | freigegeben | valide) printed: 21.05.2026

valvesgo.com

valvesgo.com

Standard variant with pendulum seal up to 100 bar

Note:

- Further variants with circuit function B, alternative voltages, brass housing, NPT or RC inner thread, seal material PTFE/FKM or PTFE/EPDM are available on request.
- The Kick and Drop coil features integrated electronics for short-term power increase and decrease in double-coil technology.

Circuit function	Port connection	Orifice	K_v value water	Medium pressure standard	Article no.		Medium pressure Kick and Drop coil	Article no. Kick and Drop coil	
					024 / AC/ DC	230 / AC/ DC		024 / AC/ DC	230/AC
		[mm]	[m³/h]	[bar]	[V/Hz]	[V/Hz]	[bar]	[V/Hz]	[V/Hz]
Body material stainless steel with G inner thread, seal material PTFE/PEEK									
CF A 2/2-way solenoid valve Direct-acting Normally closed 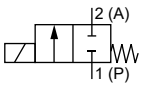	G ¼	2.0	0.14	0...60	380719	380721	0...100	o. r.	o. r.
		3.0	0.28	0...20	380733	o. r.	0...50	o. r.	o. r.
		4.0	0.54	0...8	380750	o. r.	0...25	o. r.	o. r.
	G ½	6.0	0.73	0...1.5	o. r.	o. r.	0...6	o. r.	o. r.
		8.0	0.95	0...0.8	380777	o. r.	0...2.5	o. r.	o. r.
		10.0	1.6	0...0.5	o. r.	o. r.	0...1.5	o. r.	o. r.
		12.0	1.8	0...0.3	o. r.	o. r.	0...1.2	o. r.	o. r.

o. r. = on request

Variant DN 13

Note:

- Further variants with alternative voltages, stainless steel body, NPT and RC inner thread, ¾" connection, seal material EPDM/EPDM or PTFE/PEEK are available on request.
- The Kick and Drop coil features integrated electronics for short-term power increase and decrease in double-coil technology.

Circuit function	Port connection	Orifice	K_v value water	Medium pressure Kick and Drop coil	Article no. Kick and Drop coil	
					024 / AC/DC	230/AC
		[mm]	[m³/h]	[bar]	[V/Hz]	[V/Hz]
Body material brass with G inner thread, seal material FKM/FKM						
CF A 2/2-way solenoid valve Direct-acting Normally closed 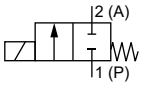	G ½	13.0	4	0...0.5	380790	380792

DTS 1000089742 EN Version: AU Status: RL (released | freigegeben | valide) printed: 21.05.2026

valvesgo.com

valvesgo.com

High pressure variant up to 250 bar or 160 bar

Note:

- Further variants with alternative voltages, NPT and RC inner thread, seal material PEEK/EPDM are available on request.
- The Kick and Drop coil features integrated electronics for short-term power increase and decrease in double-coil technology.

Circuit function	Port connection	Orifice	K_V value water	Medium pressure standard			Article no.		Medium pressure Kick and Drop coil			Article no. Kick and Drop coil	
				Water	Oil	Air	024 / AC/DC	230 / AC/DC	Water	Oil	Air	024 / AC/DC	230/AC
		[mm]	[m³/h]	[bar]	[bar]	[bar]	[V/Hz]	[V/Hz]	[bar]	[bar]	[bar]	[V/Hz]	[V/Hz]
Body material stainless steel with G inner thread, seal material PEEK/FKM													
CF A 2/2-way solenoid valve Direct-acting Normally closed 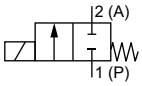	G ¼	1.0	0.03	0...200	0...150	0...250	o. r.	380705	0...250	0...250	0...250	380703	o. r.
		1.5	0.07	0...80	0...40	0...100	o. r.	o. r.	0...160	0...160	0...160	o. r.	o. r.
CF B 2/2-way solenoid valve Direct-acting Normally open 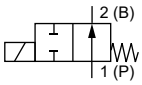	G ¼	1.0	0.03	–	–	–	–	–	0...200	0...160	0...250	380803	o. r.
		1.5	0.07	–	–	–	–	–	0...100	0...80	0...130	o. r.	o. r.

o. r. = on request
– = not available

valvesgo.com

Further variants on request

Approval
Further information can be found in chapter "3. Approvals and conformities" on page 5.

Temperature
Special temperature ranges

Process connection
- NPT
- RC

Voltage
110/50 and further non-standard voltages

DTS 1000089742 EN Version: AU Status: RL (released | freigegeben | valide) printed: 21.05.2026

valvesgo.com

8.12. Ordering chart accessories

Cable plug Type 2509, form A according to DIN EN 175301 - 803

Note:

- Dimensions in mm
- Without wiring (standard)
- The cable plug Type 2509 meets the requirements of ATEX Cat. 3 GD in assembly with a Bürkert solenoid valve.
- The cable plug Type 2509 meets the requirements of UL Listed (UL 429) in assembly with a Bürkert solenoid valve.
- Refer to data sheet **Type 2509** ▶ for more information about the cable plug.

Cable plug	Dimensions	Variant	Voltage	Article no.
	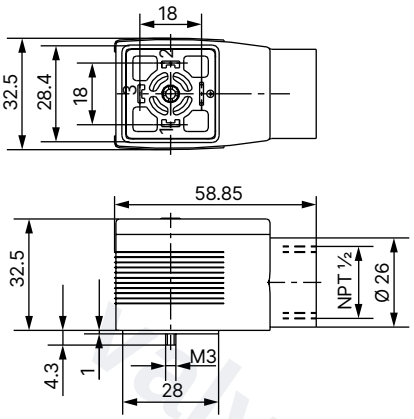	Without wiring	0...250 V AC/DC	137943

Cable plug Type 2518, form A according to DIN EN 175301 - 803

Note:

- Dimensions in mm
- For further variants see data sheet **Type 2518** ▶.

Cable plug	Dimensions	Variant	Voltage	Article no.
	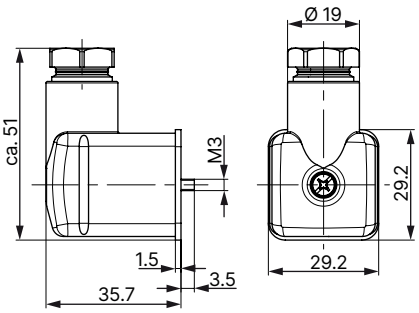	Without wiring (AC/DC)	0...250 V AC/DC	314802
		With LED (AC/DC)	12...24 V AC/DC	314812
		With LED and varistor (AC/DC)	12...24 V AC/DC	314820
		With rectifier, LED and varistor	12...24 V AC/DC	314816
		Without wiring (AC/DC) with silicone seal for higher ambient temperature, e.g. steam variant (NA07)	0...250 V AC/DC	361687

DTS 1000089742 EN Version: AU Status: RL (released | freigegeben | valide) printed: 21.05.2026

valvesgo.com

Cable glands for ATEX/IECEX terminal box

Note:

- A polyamide cable gland is included in the scope of delivery. A nickel-plated brass variant can be ordered for a surcharge.
- Refer to "7.1. Cable glands for ATEX/IECEx terminal box" on page 18 for more information about Ex cable glands.
- Refer to "7.2. Special tool to turn the terminal box" on page 19 for more information about special tool.

Description	Article no.
Ex cable gland, nickel-plated brass, 6...13 mm [1.)]	773278
Ex cable gland, polyamide, 7...13 mm [1.)]	773277
Set SC02-AC10: special tool [2.)] incl. service manual	293488

1.) Cable diameter
2.) Not included in the scope of delivery of the valve

Mounting bracket

Note:

- The mounting bracket, 2 cheese head screws M4×8 and 2 spring lock washers are included in the scope of delivery.
- The mounting bracket can be used for all standard and high-pressure variants, including ATEX/IECEx and DIN EN 161 option up to orifice size 12 mm.
- The mounting bracket cannot be used for oil burner variants, DN 13 variants and various special bodies made of solid material.

Description	Article no.
Mounting bracket for Type 6020/6027/6240/6440 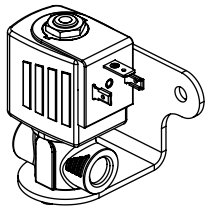	282304

DTS 1000089742 EN Version: AU Status: RL (released | freigegeben | valide) printed: 21.05.2026

valvesgo.com

valvesgo.com