bürkert
FLUID CONTROL SYSTEMS

MAN 1000111283 ML Version: H Status: RL (released | freigegeben) printed: 22.08.2026

Type 6027

NC / NO

Safety shut-off device TÜV tested in accordance with DIN EN ISO 23553-1

Operating Instructions

valvesgo.com

MAN 1000111283 ML Version: H Status: RL (released | freigegeben) printed: 22.08.2026

valvesgo.com

We reserve the right to make technical changes without notice.
© Bürkert Werke GmbH & Co. KG 2008-2026
Technical documentation 2602/06_GBen_00805826_985696779_985790603 / Original DE

Table of contents

1 About this document 4
1.1 Symbols 4
1.2 Terms and abbreviations 5
1.3 Manufacturer 5
2 Safety 6
2.1 Intended use 6
2.2 Basic safety instructions 6
3 Technical data 8
3.1 Standards and directives 8
3.2 Operating conditions 8
3.3 Type label 9
4 Installation 11
4.1 Safety instructions 11
4.2 Fluidic installation 11
4.3 Electrical connection of cable plug 12
5 Maintenance 13
5.1 Safety instructions 13
5.2 Coil installation 13
5.3 Troubleshooting 14
6 Spare parts 15
6.1 Ordering spare parts 15
7 Logistics 16
7.1 Transport and storage 16
7.2 Return 16
7.3 Disposal 16

MAN 1000111283 ML Version: H Status: RL (released | freigegeben) printed: 22.08.2026

valvesgo.com

valvesgo.com

1 About this document

The document is an important part of the product and guides the user to safe installation and operation. The information and instructions in this document are binding for the use of the product.

- Before using the product for the first time, read and observe the whole safety chapter.
- Before starting any work on the product, read and observe the respective sections of the document.
- Keep the document available for reference and give it to the next user.
- Contact the Bürkert sales office for any questions.

Further information concerning the product at Products.

- Enter the article number from the type label in the search bar.

The illustrations in these instructions may vary depending on the product variant.

1.1 Symbols

DANGER!

Warns of a danger that leads to death or serious injuries.

WARNING!

Warns of a danger that can lead to death or serious injuries.

CAUTION!

Warns of a danger that can lead to minor injuries.

NOTICE!

Warns of property damage on the product or the installation.

Indicates important additional information, tips and recommendations.

Refers to information in this document or in other documents.

- Indicates a step to be carried out.

✓ Indicates a result.

Menu Indicates a software user-interface text.

MAN 1000111283 ML Version: H Status: RL (released | freigegeben) printed: 22.08.2026

valvesgo.com

1.2 Terms and abbreviations

The terms and abbreviations are used in this document to refer to following definitions.

Product	Solenoid valve Type 6027 NC/NO

1.3 Manufacturer

Bürkert Fluid Control Systems

Christian-Bürkert-Str. 13–17

74653 Ingelfingen

GERMANY

The contact addresses are available at Contact.

Need more information or additional products?

- Explore the full range of products on our eShop.

valvesgo.com

MAN 1000111283 ML Version: H Status: RL (released | freigegeben) printed: 22.08.2026

2 Safety

2.1 Intended use

Improper use of the safety shut-off device Type 6027 can result in danger to persons, nearby equipment and the environment.

- The device has been specially designed for combustion plants and controls the supply of heating oil to a burner.
- When deploying the device, observe the authorised data, and the operating and usage conditions specified in the contract documents and operating instructions.
- Bürkert valves must not be combined with valves from other manufacturers.
- The prerequisites for safe and trouble-free operation are correct transport, storage and installation as well as careful operation and maintenance.
- Depending on the variant, valve Type 6027 can be used in the flow line or return line of the heating system. Special installation instructions must therefore be observed (see Coil installation [▸ 13]). The operating instructions supplied by the heating system manufacturer must also be observed.
- The safety shut-off device is designed for heating oils specified in DIN 51603 Part 1–6 with the following viscosities:
  for power ≤ 12 W: 1.2...22 cST
  for power > 12 W: 1.6...76 cST
  The use of other media is only permitted after consultation with the Bürkert sales department.
- The valve can also be used for mixtures of heating oil EL and FAME (DIN (SPEC) 51603-6)/(EN 14214) provided the following conditions are met:
  - Only FAME fuels that meet or are comparable to the specification according to EN 14214 may be used.
  - To reduce effects such as deposit formation and fuel ageing, blends of heating oil EL and FAME should always be sufficiently treated with additives, for which the specifications of the additive manufacturer must be followed.

2.2 Basic safety instructions

These safety instructions do not take into account any unforeseen circumstances or incidents which may arise during installation, operation and maintenance.

Danger due to high pressure

- Before loosening lines and valves, turn off the pressure and vent the lines.

Danger due to electrical voltage

- Before working on or inside the device or the system, switch off the power supply and secure against reactivation.
- Observe the applicable accident prevention and safety regulations for electrical devices.

Risk of burns from hot device surfaces

- Do not touch the device with your bare hands.

MAN 1000111283 ML Version: H Status: RL (released | freigegeben) printed: 22.08.2026

valvesgo.com

Danger resulting from use of incorrect medium

Unapproved media may impair the tightness and function of the valve.

- Only use media listed in Technical data [▸ 8].

Risk of injury from malfunctioning valves with alternating current (AC)

A seized core will cause the coil to overheat, leading to functional failure.

- Monitor the working process to ensure it is functioning properly.

Risk of injury from functional impairment after external fire

- Check the system and safety shut-off device after an external fire.
- Where there is visible damage, replace the safety shut-off device.

Risk of escaping medium due to leaking fittings.

- Make sure seals are properly seated.
- Carefully screw the coil and cable plug together.

General hazardous situations

To prevent injuries/damage, observe the following:

- Ensure that the system cannot be activated unintentionally.
- Do not subject the body/housing to mechanical stress.
- Do not make any external modifications to the device bodies. Do not paint body parts or screws.
- Ensure that only trained technicians carry out installation and maintenance work.
- After an interruption in the power or pneumatic supply, ensure that the process is restarted in a defined or controlled manner.
- Operate the device only if it is in perfect condition and in accordance with the operating instructions.
- Ensure that the generally accepted rules of engineering practice are observed when planning the use and operation of the device.

MAN 1000111283 ML Version: H Status: RL (released | freigegeben) printed: 22.08.2026

valvesgo.com

3 Technical data

3.1 Standards and directives

This product complies with the legal requirements applicable at the time of placing on the market and has been developed and tested in accordance with the relevant European directives/regulations and harmonized standards. The conformity is documented and, if necessary, supported by evidence. The EU Declaration of Conformity can be found behind the respective type on the home page country.burkert.com

3.2 Operating conditions

The following values are indicated on the type label (see Type label [▸ 9]):

- Ambient and medium temperature, voltage [1]) (tolerance ±10%), current type, pressure.

Storage temperature	−30...+80 °C

Materials

Body	Brass or stainless steel
Valve seat seal	PTFE
Body seal	FKM
Solenoid jacket	Epoxy or polyamide

Media

Fuel oils (DIN 51603 Parts 1–6) and mixtures of EL and FAME heating oils (DIN (SPEC) 51603-6)/(EN 14214) with the following viscosities:	
for power ≤ 12 W	1.2...22 cST
for power > 12 W	1.6...76 cST

Other media after consultation with the Bürkert sales department

Degree of protection

IP65 in accordance with EN 60529 with approved cable plug in accordance with DIN 175301-803

[1]) Use as a return valve: when combined with a flow valve in an electrical series connection, the voltage specified on the type label is half of the respective mains voltage.

MAN 1000111283 ML Version: H Status: RL (released | freigegeben) printed: 22.08.2026

valvesgo.com

Circuit function of 2/2-way valve:

A (NC)	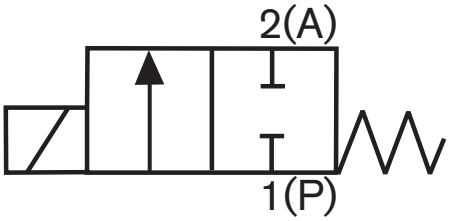
B (NO)	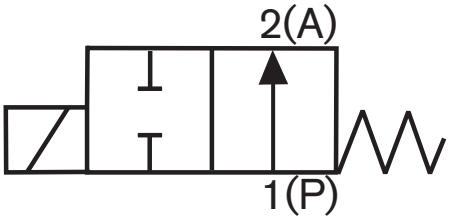

3.3 Type label

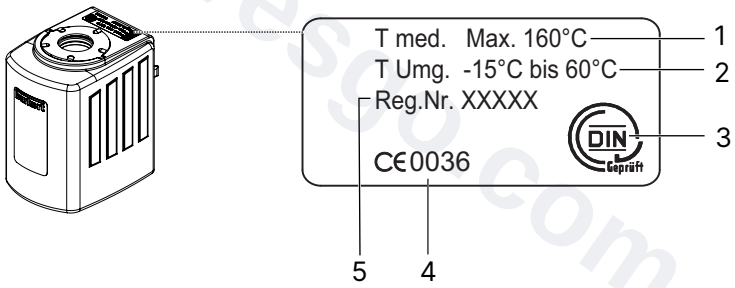

Fig. 1: Type label approval (depending on variant)

1	Maximum medium temperature	2	Ambient temperature
3	Certification	4	Supervisory body
5	Register number		

MAN 1000111283 ML Version: H Status: RL (released | freigegeben) printed: 22.08.2026

valvesgo.com

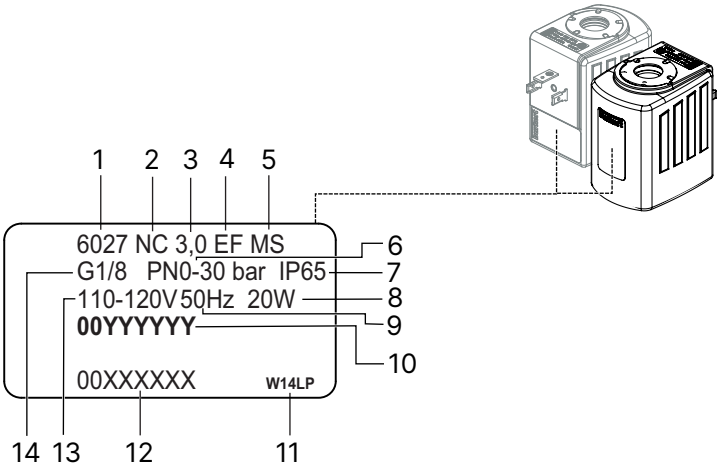

Fig. 2: Standard type label

1	Type	2	Circuit function
3	Orifice	4	Sealing material
5	Body material	6	Operating pressure
7	Degree of protection	8	Capacity
9	Frequency	10	Customer article no. (optional)
11	Serial number	12	Article number
13	Voltage	14	Connection thread

MAN 1000111283 ML Version: H Status: RL (released | freigegeben) printed: 22.08.2026

valvesgo.com

valvesgo.com

4 Installation

4.1 Safety instructions

DANGER!

Risk of injury from high pressure in the system

- Before loosening lines or valves, switch off the pressure and vent the lines.

DANGER!

Risk of injury from electric shock

- Before working on or inside the device or the system, switch off the power supply and secure against reactivation.
- Observe the applicable accident prevention and safety regulations for electrical devices.

WARNING!

Risk of injury due to improper installation

- Installation must be carried out by authorised technicians only and with the appropriate tools.

WARNING!

Risk of injury from unintentional activation of the system and uncontrolled restart

- Secure the system against unintentional activation.
- Ensure a controlled restart after installation.

4.2 Fluidic installation

Installation position: any, preferably with actuator on top.

- Before installation, check pipelines for soiling and clean if necessary.
- Install dirt trap at the valve inlet (0.2...0.4 mm).
- Only use new seals.
- Hold the device with an open-end wrench on the body and screw into the pipeline.
- Pay attention to flow direction:
  For use in the flow line: from 1 → 2 (from P → A) or in the direction of the arrow
  When used in the return line: from 2 → 1 (from A → P) or against the direction of the arrow.

NOTICE!

Breaking hazard

- Do not use the coil as a lever arm.

NOTICE!

Installation in the incorrect direction may lead to malfunctions of the heating device.

- Observe installation direction.

MAN 1000111283 ML Version: H Status: RL (released | freigegeben) printed: 22.08.2026

valvesgo.com

4.3 Electrical connection of cable plug

WARNING!

Risk of injury from electric shock

- Before working on or inside the device or the system, switch off the power supply and secure against reactivation.
- Observe the applicable accident prevention and safety regulations for electrical devices.

WARNING!

Risk of electric shock if protective conductor not connected

- Always connect the protective conductor and check electrical continuity.

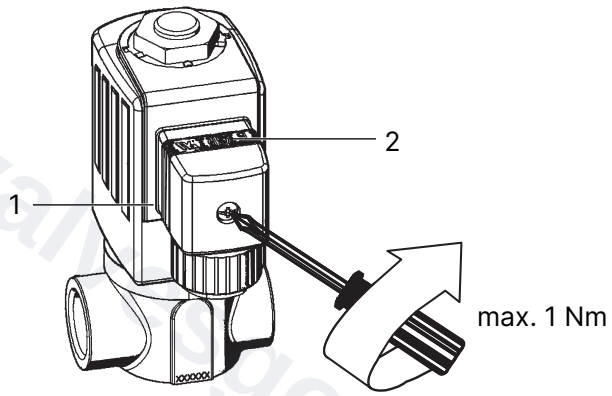

1 Seal	2 Approved cable plug, e.g. Type 2508

MAN 1000111283 ML Version: H Status: RL (released | freigegeben) printed: 22.08.2026

valvesgo.com

5 Maintenance

5.1 Safety instructions

DANGER!

Risk of injury due to improper maintenance work

- Maintenance must be carried out by authorised technicians using the appropriate tools.

DANGER!

Risk of injury from unintentional activation of the system and uncontrolled restart

- Secure the system against unintentional activation.
- Ensure a controlled restart after maintenance is completed.

5.2 Coil installation

WARNING!

Risk of injury due to escaping medium

Medium may leak if a tightly fastened nut is loosened.

- Do not continue to turn tightly fastened nuts.

WARNING!

Risk of injury due to overheating or fire hazard

Connecting the coil without a pre-assembled valve leads to overheating and destroys the coil.

- Only connect the coil if a pre-assembled valve is in place.

WARNING!

Risk of injury from electric shock

If there is no protective conductor function between the coil and the body, there is a risk of electric shock.

- The plastic ring (optional) must be inserted into the body spigot during installation. It must not protrude over the hexagonal nipple.
- Check the protective conductor function after installing the coil.

MAN 1000111283 ML Version: H Status: RL (released | freigegeben) printed: 22.08.2026

valvesgo.com

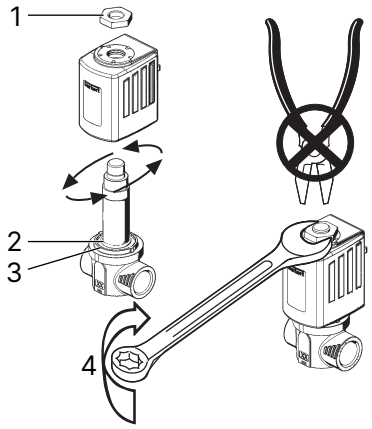

1	Nut	2	O-ring
3	Plastic ring (optional)	4	Pay attention to torque! (see table below)

The solenoid can be rotated to any position on the valve body.

Width across flats	Torque for coil installation
AF 14	5 Nm
AF 22	15 Nm

Tab. 1: Tightening torques for coil installation, coil types

5.3 Troubleshooting

If there is a malfunction, check that:

- the device is installed correctly (correct installation direction),
- the connection has been properly made,
- the device is not damaged,
- all screws have been firmly tightened,
- there is voltage and pressure,
- and the pipelines are free of dirt.

If the magnet is not attracting

Possible cause:

- Short circuit or coil interrupted, or
- Core or core area contaminated.

Following an external fire

- Check the system and safety shut-off device after an external fire.
- Where there is visible damage, replace the safety shut-off device.

MAN 1000111283 ML Version: H Status: RL (released | freigegeben) printed: 22.08.2026

valvesgo.com

6 Spare parts

CAUTION!

Risk of injury and/or damage due to incorrect parts

Incorrect accessories and unsuitable spare parts may cause injuries and damage the device and the surrounding area.

- Use only original accessories and original spare parts from Bürkert.

6.1 Ordering spare parts

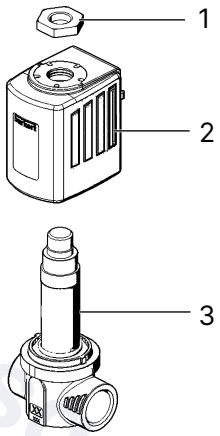

1	Nut	2	Coil
3	Armature		

Nut and coil set can be ordered as a single item under the order number of the device (see Type label [▸ 9]).
Armature set on request.

MAN 1000111283 ML Version: H Status: RL (released | freigegeben) printed: 22.08.2026

valvesgo.com

valvesgo.com

7 Logistics

7.1 Transport and storage

- Protect the device against moisture and dirt in the original packaging during transportation and storage.
- Avoid UV radiation and direct sunlight.
- Protect connections, if present, from damage with protective caps.
- Observe the permitted storage temperature.

7.2 Return

No work or tests will be carried out on the device until a valid Contamination Declaration has been received.

- To return a used device to Bürkert, contact the Bürkert sales office. A return number is required.

7.3 Disposal

Environmentally friendly disposal

- Follow national regulations regarding disposal and the environment.
- Collect electrical and electronic devices separately and dispose of them as special waste.

Further information at country.burkert.com

MAN 1000111283 ML Version: H Status: RL (released | freigegeben) printed: 22.08.2026

valvesgo.com