bürkert
FLUID CONTROL SYSTEMS

Servo-assisted 2/2-way diaphragm valve

- Servo-assisted diaphragm valve with nominal diameter of up to DN 40
- Spring coupled diaphragm opens without differential pressure
- Damped design for low noise
- High flow rate with compact design
- Energy-saving double coil technology with kick and drop variant

Product variants described in the data sheet may differ from the product presentation and description.

Can be combined with

Type 2518
Cable plug,
form A according to
DIN EN 175301-803

Type 1087
Timer,
form A according to
DIN EN 175301-803

Type 2509
Cable plug,
form A according to
DIN EN 175301-803

Type description

Valve 6213 EV is a servo-assisted diaphragm valve. The spring coupling of the diaphragm supports the opening process in the valve. In its standard variant, the valve is suitable for deployment with liquids. A minimum differential pressure is required for full opening. For gas and vacuum applications, a special variant is available (HP00) that opens the valve without differential pressure. Various diaphragm materials are available depending on the actual application. The body is is available in brass, stainless steel and gunmetal. For other markets, dezincification-resistant brass is available. To reduce electrical power consumption during operation, coils with integrated Kick-and-Drop (KD) electronics featuring double coil technology are available.

DTS 1000115690 EN Version: AI Status: RL (released | freigegeben | valide) printed: 11.02.2026

© Christian Bürkert GmbH & Co. KG, Subject to alteration

valvesgo.com

Table of contents

1. General technical data 4

2. Circuit functions 5

3. Approvals and conformities 5

3.1. General notes 5
3.2. Conformity 5
3.3. Standards 5
3.4. Explosion protection 6
3.5. North America (USA/Canada) 6
3.6. Drinking water 6
3.7. Others 7
Fire protection on railway vehicles 7
Safety shut-off valves 7
VDE – Certificate of conformity with factory surveillance 7

4. Materials 8

4.1. Bürkert resistApp 8
4.2. Material specifications 8

5. Dimensions 9

5.1. Standard variant with brass and stainless steel body 9
5.2. Gunmetal variant with external thread 10
5.3. Coil dimension 11
5.4. ATEX/IECEx variant 12
5.5. ATEX/IECEx variant with terminal box (HP00 variant) 13

6. Performance specifications 14

6.1. Power consumption 14
Standard variant 14
With Kick and Drop coil 14

7. Product accessories 15

7.1. Cable glands for ATEX/IECEx terminal box 15
7.2. Special tool to turn the terminal box 15

8. Ordering information 16

8.1. Bürkert eShop 16
8.2. Bürkert product filter 16
8.3. Bürkert Product Enquiry Form 16
8.4. Ordering chart 17
Standard variant with brass body 17
Standard variant with drinking water approval according to UBA 18
HP00 variant with brass body 18
HP00 variant: Explosion proofed ATEX/IECEx variant with 3 m cable 19
HP00 variant: Explosion proofed ATEX/IECEx variant with terminal box 19
Standard variant with stainless steel body 20
HP00 variant with stainless steel body 21
Gunmetal housing with external thread and drinking water approval according to UBA 21
Standard variant with Kick and Drop coil 21

DTS 1000115690 EN Version: AI Status: RL (released | freigegeben | valide) printed: 11.02.2026

valvesgo.com

8.5. Ordering chart accessories....22
Cable plug Type 2509, form A according to DIN EN 175301 - 803....22
Cable plug Type 2518, form A according to DIN EN 175301 - 803....22
Cable glands for ATEX/IECEX terminal box....23
Timer Type 1087, form A according to DIN EN 175301 - 803....23

DTS 1000115690 EN Version: AI Status: RL (released | freigegeben | valide) printed: 11.02.2026

valvesgo.com

valvesgo.com

1. General technical data

Product properties	
Dimensions	Further information can be found in chapter "5. Dimensions" on page 9.
Material	
Seal	NBR, FKM, EPDM
Body	Brass acc. to DIN EN 50930 - 6 Stainless steel 1.4408 Gunmetal (external thread) DN 10...DN 20
Coil	Polyamide, epoxy (insulation class H)
Valve inner parts	Brass body: brass, stainless steel and PPS Stainless steel body: stainless steel and PPS Gunmetal body: stainless steel and PPS (external thread) DN 10...DN 20
Orifice	Standard: DN 10...DN 40 HP00: DN 13...DN 20
Circuit function	A Further information can be found in chapter "2. Circuit functions" on page 5.
Thermal insulation class of solenoid coil	Epoxy coil class H
Performance data	
Duty cycle	100 % continuous operation; KD coil max. 6 switching cycles/minute
Switching time [1.] AC/DC	
DN 10...DN 13	Opening: 10...100 ms Closing: 100...200 ms
DN 20	Opening: 200...300 ms Closing: 400...700 ms
DN 25...DN 40	Opening: 300...400 ms Closing: 800...1400 ms
Electrical data	
Operating voltage	Standard: 24 V DC, 24 V 50 Hz, 230 V 50 Hz, 110 V 50 Hz, 120 V 60 Hz HP00: 24 V DC, 24 V 50/60 Hz, 230 V 50/60 Hz
Power consumption	Depending on orifice and coil size Further information can be found in chapter "6. Performance specifications" on page 14
Voltage tolerance	± 10 %
Medium data	
Operating medium	Medium that does not attack the housing and sealing materials Further information can be found in chapter "4.1. Bürkert resistApp" on page 8.
Medium temperature	
With NBR	- 10 °C...+ 80 °C
With FKM	0 °C...+ 90 °C with polyamide coil 0 °C...+ 120 °C with epoxy coil
With EPDM	- 30 °C...+ 90 °C with polyamide coil - 30 °C...+ 100 °C with epoxy coil
With EPDM with drinking water approval according to UBA	Application range of cold and hot water up to + 60 °C
Viscosity	Max. 21 mm^2/s
Product connections	
Electrical connection	• Plug contacts according to DIN EN 175 301 - 803 form A for cable plug **Type 2518** ▶. Further information can be found in chapter "Cable plug Type 2518, form A according to DIN EN 175301 - 803" on page 22. • Plug contacts according to DIN EN 175 301 - 803 form A for cable plug **Type 2509** ▶. Further information can be found in chapter "Cable plug Type 2509, form A according to DIN EN 175301 - 803" on page 22.
Port connection	G ¼, G ⅜, G ½, G ¾,G 1, G 1¼, G 1½, G 2 NPT ¼, NPT ⅜, NPT ½, NPT ¾, NPT 1, NPT 1¼, NPT 1½, NPT 2 Rc ⅜, Rc ½, Rc ¾, Rc 1, Rc 1¼

DTS 1000115690 EN Version: AI Status: RL (released | freigegeben | valide) printed: 11.02.2026

valvesgo.com

Approvals and conformities	
Degree of protection	IP65 with cable plug **Type 2518** ▶, (IP67 on request)
Explosion protection	Further information can be found in chapter "3.4. Explosion protection" on page 6.
North America (USA/Canada)	Further information can be found in chapter "3.5. North America (USA/Canada)" on page 6.
Drinking water	Further information can be found in chapter "3.6. Drinking water" on page 6.
Others	Further information can be found in chapter "3.7. Others" on page 7.
Environment and installation	
Installation	As required, preferably with actuator upright
Ambient temperature[2.)]	
Standard variant	Max. + 55 °C
AC10	**10 switching cycles/min**
20/2.0 W	Max. + 70 °C
AC19	**10 switching cycles/min**
44/6.5 W	Max. + 70 °C
85/8.5 W	Max. + 55 °C

1.) Measurement at + 20 °C, 6 bar at the valve inlet and free outlet, opening: pressure reduction to 90 % of the difference to the flow pressure, closing: pressure build-up to 90 % of the inlet pressure

2.) The temperature specifications correspond to the specified switchable differential pressures. Higher temperatures are possible on request, depending on the differential pressure, duty cycle and number of switching cycles. Further information can be found in chapter "6.1. Temperature diagram" in the ACKD data sheet on the website of **Typ 6213** ▶.

2. Circuit functions

Symbol	Description
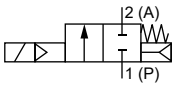	**Circuit function A (CF A)** 2/2-way solenoid valve Servo-controlled Normally closed

3. Approvals and conformities

3.1. General notes

- The approvals and conformities listed below must be stated when making enquiries. This is the only way to ensure that the product complies with all required specifications.
- Not all available variants can be supplied with the below mentioned approvals or conformities.

3.2. Conformity

In accordance with the Declaration of Conformity, the product is compliant with the EU Directives.

3.3. Standards

The applied standards which are used to demonstrate compliance with the EU Directives are listed in the EU-Type Examination Certificate and/or the EU Declaration of Conformity.

DTS 1000115690 EN Version: AI Status: RL (released | freigegeben | valide) printed: 11.02.2026

valvesgo.com

3.4. Explosion protection

Approval	Description
	Optional: Explosion protection according to category 2 (zone 1/21) Ex marking of the components according to the following table:

Coil Type AC10	
Coils with cable outlet	**Coils with terminal box**
ATEX: EPS 18 ATEX 1232 X II 2G Ex mb IIC T4 Gb II 2D Ex mb IIIC T130 °C Db **IECEx:** IECEx EPS 18.0110 X Ex mb IIC T4 Gb Ex mb IIIC T130 °C Db	**ATEX:** EPS 18 ATEX 1232 X II 2G Ex eb mb IIC T4 Gb II 2D Ex mb tb IIIC T130 °C Db **IECEx:** IECEx EPS 18.0110 X Ex eb mb IIC T4 Gb Ex mb tb IIIC T130 °C Db

3.5. North America (USA/Canada)

Approval	Description
	Optional: UL Listed for the USA The products are UL Listed for the USA according to: • UL 429 (electrically operated valves)
	Optional (valid for coils): UL Hazardous Locations – Explosion Protection UL Listed for Hazardous Locations for USA and Canada Class I, Zone 1 Class I, Division 2, Group A, B, C and D Class II + III, Division 2, Group F and G
	Optional (valid for valves): UL Recognized for the USA The valves are UL Recognized for the USA according to: • UL 429 (electrically operated valves)
	Optional (valid for valves): CSA for Canada The valves are CSA approved for Canada according to: • CSA 139 (electrically operated valves)
	Optional: FM (Factory Mutual) – Explosion Protection (valid for coils) FM for Hazardous Locations for USA and Canada Class I, Zone 1 Class I, Division 1, Groups A, B, C and D Class II + III, Division 1, Groups E, F and G

3.6. Drinking water

Conformity	Description
H_2O	**Suitable for use in drinking water applications** The materials comply with the assessment principles (UBA) for materials in contact with drinking water (Trinkwasserv). PF36: Suitable for products with a maximum temperature of + 60 °C (warm water) PF40: Suitable for products with a maximum temperature of + 23 °C (cold water)

Approval	Description
H_2O	**French ACS approval for drinking water products (valid for the variable code PY23)** The products are approved according to French ACS approval for drinking water products („Attestation de conformité sanitaire“).

DTS 1000115690 EN Version: AI Status: RL (released | freigegeben | valide) printed: 11.02.2026

valvesgo.com

3.7. Others

Fire protection on railway vehicles

Approval	Description
DIN EN 45545	**Optional: Fire protection on railway vehicles in accordance with DIN EN 45545 applicable parts 2 and 5: requirements for fire behaviour of materials and components** The products comply with the fire protection requirements in accordance with applicable parts 2 and 5 of DIN EN 45545 for use in the interior of railway vehicles for operating classes 1 - 3 (OC1 - 3) in conjunction with hazard levels 1 - 2 (HL1 - 2) in accordance with the manufacturer's declaration.

Safety shut-off valves

Approval	Description
	Safety shut-off valves as a piece of equipment with safety function according to DIN EN ISO 23553 - 1 (valid for the variable code PD22) The automatic and semi-automatic valves are suitable for use with oil, according to the manufacturer's declaration.

VDE – Certificate of conformity with factory surveillance

Approval	Description
	Optional: Certificate of conformity with factory surveillance (VDE Testing and Certification Institute) (valid for the variable code PW01 and PW02) The electrically operated water valves are tested and certified according to: • DIN EN 60730 - 1 (VDE 0631 - 1) • EN 60730 - 1 • DIN EN IEC 60730 - 2 - 8 (VDE 0631 - 2 - 8) The electrically operated water valves also fulfill the requirements of: • IEC 60730 - 1 • IEC 60730 - 2 - 8

DTS 1000115690 EN Version: AI Status: RL (released | freigegeben | valide) printed: 11.02.2026

valvesgo.com

4. Materials

4.1. Bürkert resistApp

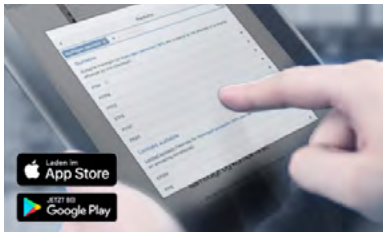

Bürkert resistApp – Chemical resistance chart

You want to ensure the reliability and durability of the materials in your individual application case? Verify your combination of media and materials on our website or in our resistApp.

Start chemical resistance check

4.2. Material specifications

Note:
The sectional view shown corresponds to the standard variant (DN 20). For other variants and nominal diameters, the sectional view varies.

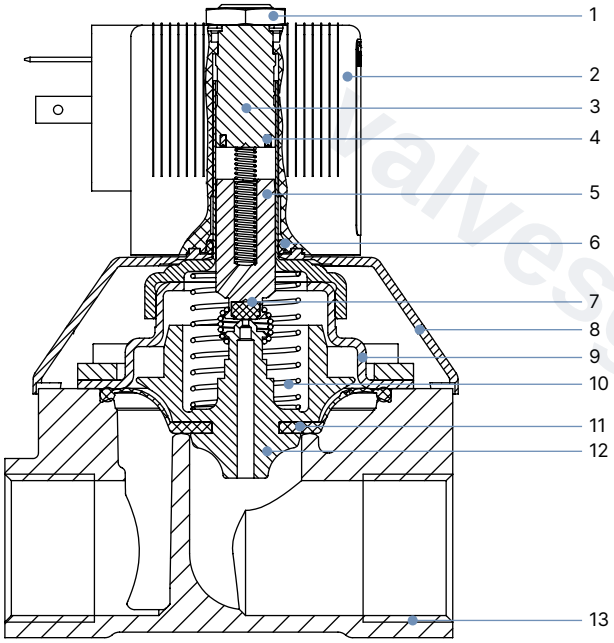

No.	Element	Material
1	Nut	Steel (thick-film passivated according to RoHS) Stainless steel 1.4305, PTFE-coated
2	Coil	Polyamide or epoxy
3	Stopper	Stainless steel 1.4113
4	Shading ring (only AC variant)	with brass body: copper (Cu) with stainless steel body: silver (Ag)
5	Magnetic core	Stainless steel 1.4113
6	O-ring	FKM
7	Plunger seal	NBR, FKM, EPDM
8	Bonnet	PA6
9	Cover	DN 10...DN 25: stainless steel 1.4301 DN 40: brass, stainless steel 1.4408
10	Spring	Stainless steel 1.4310
11	Diaphragm	NBR, FKM, EPDM
12	Diaphragm support	PPSGF40 in combination with brass and accordingly stainless steel parts
13	Valve body	Brass, stainless steel 1.4408 Gunmetal with external thread

DTS 1000115690 EN Version: AI Status: RL (released | freigegeben | valide) printed: 11.02.2026

valvesgo.com

5. Dimensions

5.1. Standard variant with brass and stainless steel body

Note:

- Dimensions in mm
- The dimensions F1 and G 1 apply to G thread.
- The dimensions F2 and G 2 apply to NPT thread.
- The dimensions F3 and G 3 apply to Rc thread.

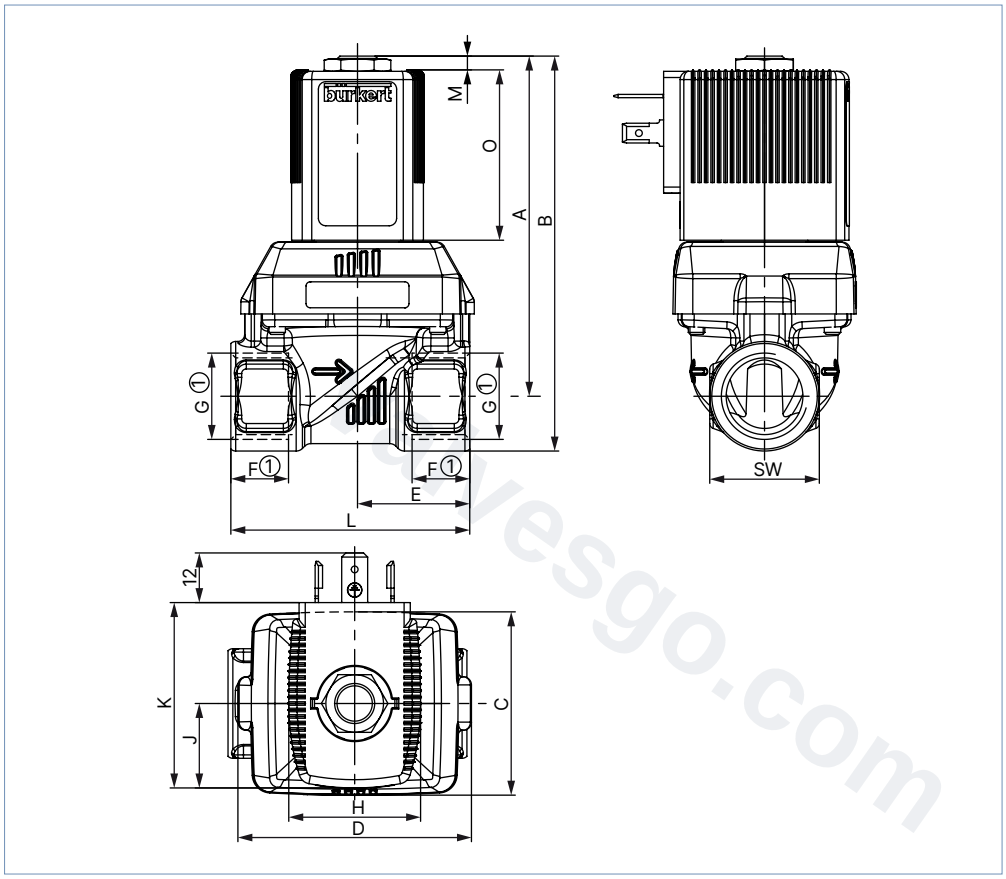

DN	A	B	C	D	E	Connection thread						L	SW	Coil size
						G		NPT		Rc				
					(MS/VA)	F1	G1	F2	G2	F3	G3	(MS/VA)		
10	71.1	82.1	36	46	22	12	G ¼	10.0	NPT ¼	–	–	50	22	5 and 6
						12	G ⅜	10.3	NPT ⅜	10.1	Rc ⅜			
10 [1.)]	73.1	86.6			24.5	14	G ½	13.7	NPT ½	13.2	Rc ½	50	27	
10 [2.)]												55		
13 [1.)]	82.6	95.9	44.5	56.7	27.25	14	G ½	13.7	NPT ½	13.2	Rc ½	58	27	5 and 6
13 [2.)]					32.5							65		
13	84.6	100.6			32.5	16	G ¾	14	NPT ¾	14.5	Rc ¾	65	32	
20	97.1	113.1	65	76.6	37	16	G ¾	14	NPT ¾	14.5	Rc ¾	80	32	5 and 6
20	99.6	120.1			37.5	18	G 1	16.8	NPT 1	16.8	Rc 1	80	41	
13 [1.)]	109.3	122.8	44.5	56	27.25	14	G ½	13.7	NPT ½	13.2	Rc ½	58	27	K and L
13 [2.)]					32.5							65		
13	111.3	127.3			32.5	16	G ¾	14	NPT ¾	14.5	Rc ¾	65	32	
20	123.9	139.9	65	76.6	37	16	G ¾	14	NPT ¾	14.5	Rc ¾	80	32	K and L
20	126.4	146.9			37.5	18	G 1	16.8	NPT 1	16.8	Rc 1	80	41	
25	143.4	163.4	77	88	46	18	G 1	16.8	NPT 1	16.8	Rc 1	95	41	K and L
25	148.3	173.3			46	20	G 1¼	17.3	NPT 1¼	19.1	Rc 1¼	95	50	

DTS 1000115690 EN Version: AI Status: RL (released | freigegeben | valide) printed: 11.02.2026

valvesgo.com

DN	A	B	C	D	E	Connection thread						L	SW	Coil size
						G		NPT		Rc				
					(MS/VA)	F1	G1	F2	G2	F3	G3	(MS/VA)		
40 1.)	153.9	178.9	104.5	117	61	20	G 1¼	17.3	NPT 1¼	19.1	Rc 1¼	126	50	K and L
40	159.4	189.4			61	22	G 1½	17.3	NPT 1½	19.1	Rc 1½	126	60	
40	165.4	200.4			64	24	G 2	17.6	NPT 2	23.4	Rc 2	132	70	

1.) Only threaded brass connection
2.) Only threaded stainless steel connection

5.2. Gunmetal variant with external thread

Note:
Dimensions in mm

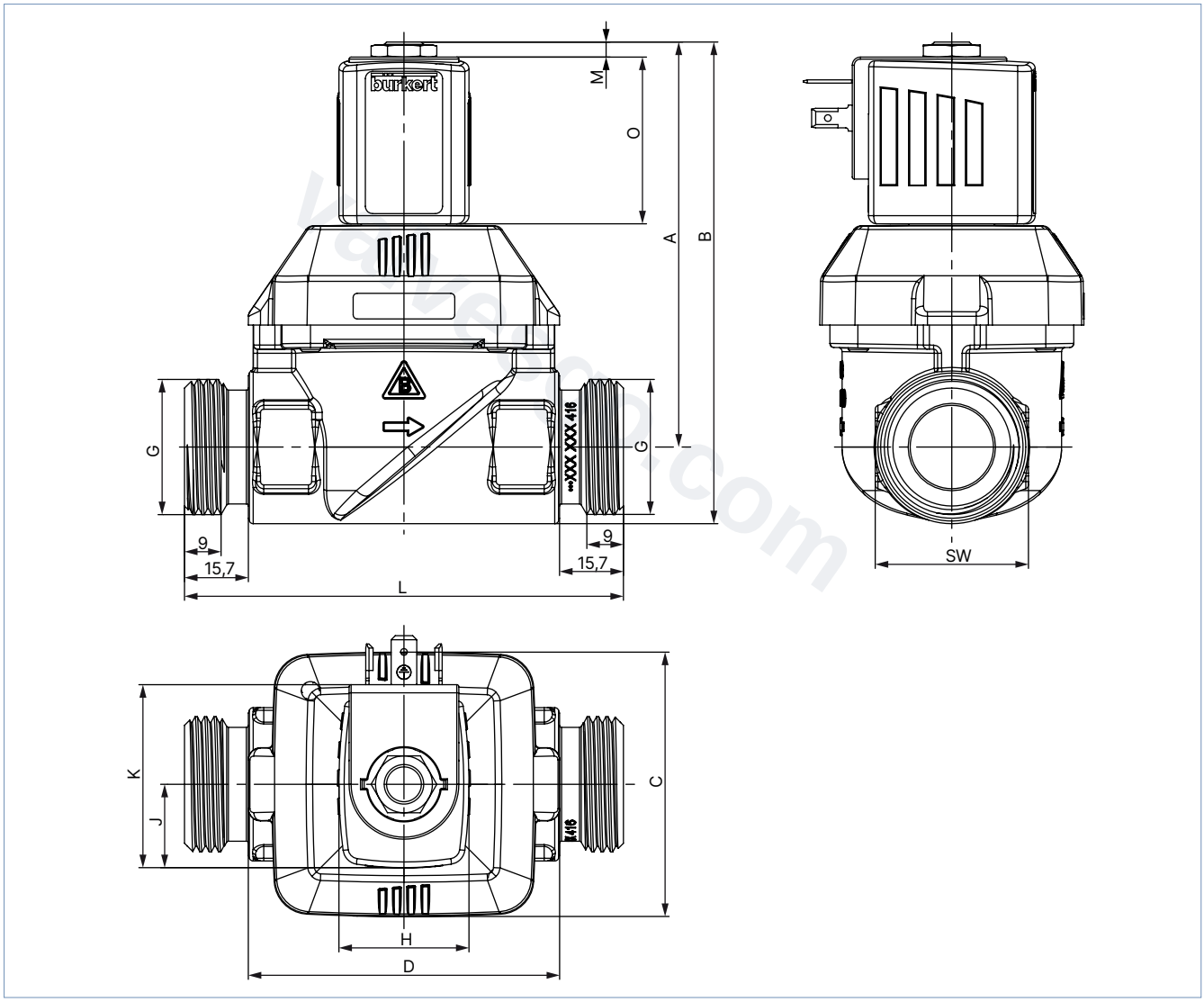

DN	A	B	C	D	G	L	SW	Coil size
10	73.1	86.1	36	46	G ½	80	26	5 and 6
13	84.6	100.6	44.5	56.7	G ¾	89	32	5 and 6
20	99.6	118.5	65	76.6	G 1	108	37.7	5 and 6
13	104.3	120.3	44.5	56.7	G ¾	89	32	K and L
20	119.3	139.8	36	76.6	G 1	108	37.7	K and L

DTS 1000115690 EN Version: AI Status: RL (released | freigegeben | valide) printed: 11.02.2026

valvesgo.com

5.3. Coil dimension

Note:
Dimensions in mm

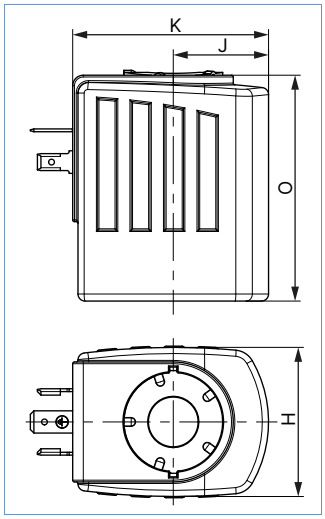

Coil size	H	J	K	O	M
5	32	20.5	45	41	3.4
6	40	23.5	51	41	3.4
K	42	27	55.5	64	7
L	65	37.5	72	64	7

DTS 1000115690 EN Version: AI Status: RL (released | freigegeben | valide) printed: 11.02.2026

valvesgo.com

valvesgo.com

5.4. ATEX/IECEx variant

Note:
Coil with terminal box and cable gland or coil with cable connection are availiable on request.

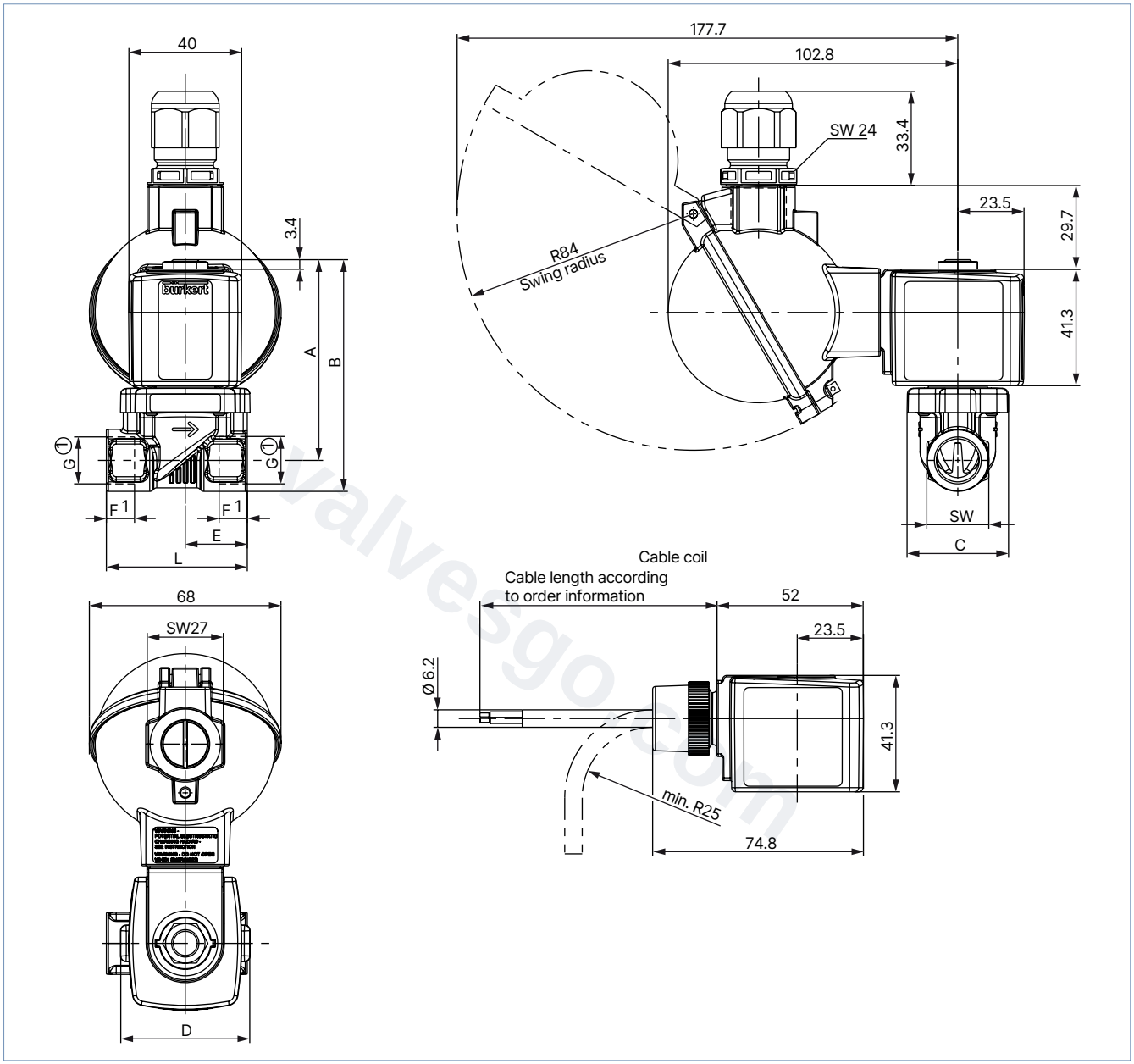

DN	A	B	C	D	E	G		NPT		Rc		L	SW
						F1	G1	F2	G2	F3	G3		
10	71.2	82.2	36	45.6	22	12	G ¼	10	NPT ¼	–	–	50	22
							G ⅜	10.3	NPT ⅜	10.1	Rc ⅜		
	73.2	86.7			24.5	14	G ½	13.7	NPT ½	13.2	Rc ½	55	27
13	82.7	96	44.5	56.7	27.25	14	G ½	13.7	NPT ½	13.2	Rc ½	58	27
	84.7	100.7			32.5	16	G ¾	14	NPT ¾	14.5	Rc ¾	65	32
20	97.2	113.2	65	76.6	37	16	G ½	14	NPT ¾	14.5	Rc ¾	80	41
	99.7	120.2			37.5	18	G 1	16.8	NPT 1	16.8	Rc 1		

DTS 1000115690 EN Version: AI Status: RL (released | freigegeben | valide) printed: 11.02.2026

valvesgo.com

5.5. ATEX/IECEx variant with terminal box (HP00 variant)

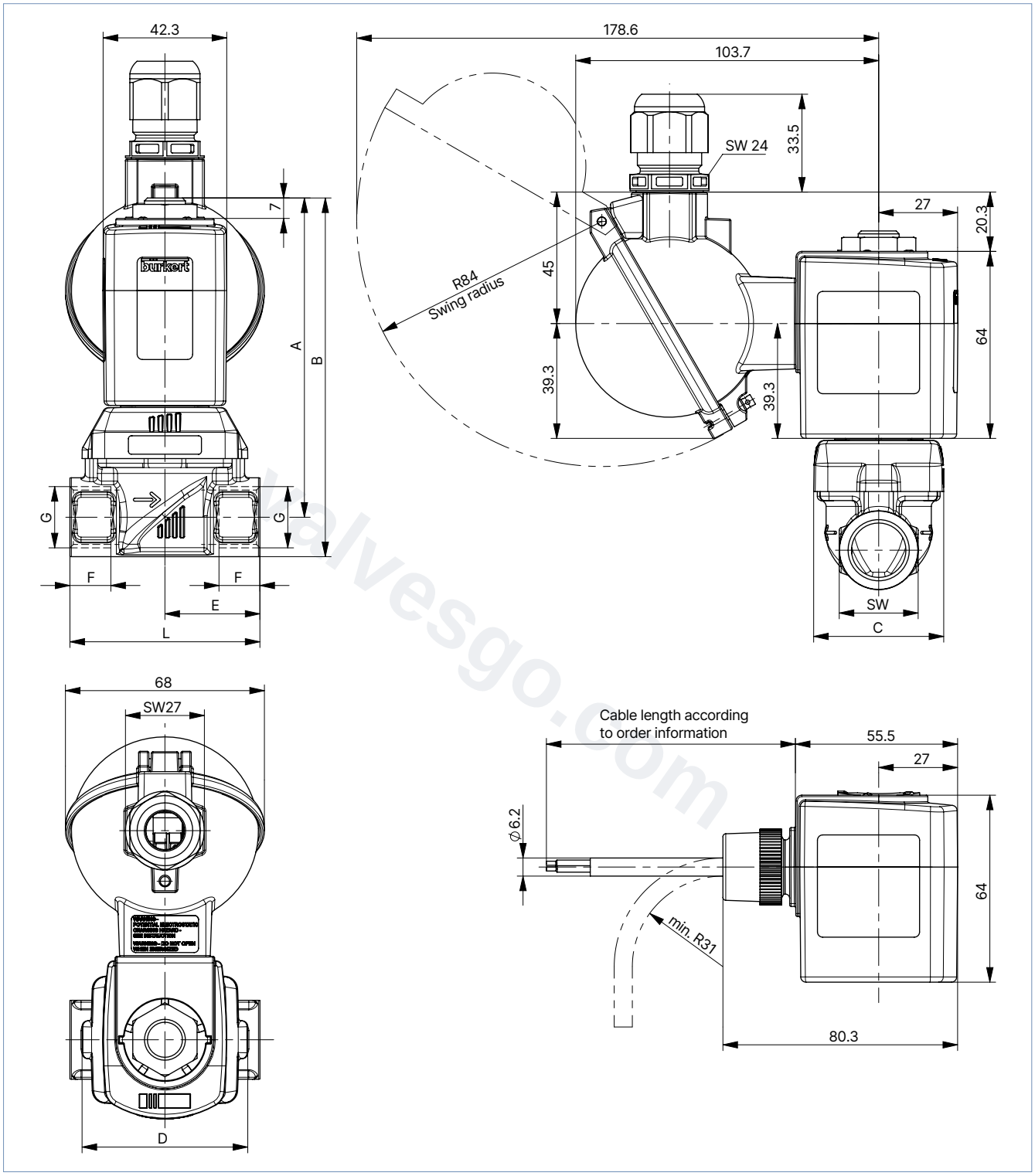

DN	A	B	C	D	E	F	G	L	SW
13 [1.)]	109.3	122.8	44.5	56.7	27.25	14	G ½	58	27
13 [2.)]					32.5			65	
20	116.8	132.8	65	76.6	37	16	G ¾	80	32

1.) Only threaded brass connection
2.) Only threaded stainless steel connection

DTS 1000115690 EN Version: AI Status: RL (released | freigegeben | valide) printed: 11.02.2026

valvesgo.com

6. Performance specifications

6.1. Power consumption

Standard variant

Nominal size	Coil size		AC			DC		AC/DC ATEX/IECEx
			Inrush power	Holding power		Cold power	Warm power	Nominal power
[mm]	[mm]	SG	[VA]	[VA]	[W]	[W]	[W]	[W]
10	32	5	34	14	8	–	–	–
10	40	6	–	–	10	11	10	9
13	32	5	36	14	8	–	–	–
13	40	6	–	–	10	11	10	9
13	42	K	125	37	16	21	16	–
20	32	5	38	14	8	–	–	–
20	40	6	–	–	10	11	10	9
20	42	K	140	37	16	21	16	–
25	42	K	150	37	16	–	–	–
25	65	L	–	–	–	28	21	–
40	42	K	190	37	16	–	–	–
40	65	L	–	–	–	28	21	–

With Kick and Drop coil

Nominal size	Coil size		Kick and Drop coil AC/DC [1.)]		
			Cold power Inrush power (500 ms)	Cold power Holding power	Warm power Holding power
[mm]	[mm]	SG	[W]	[W]	[W]
10...13	40	6	20	2	–
13...20	42	K	44	6.5	5.5
13...20	42 (ATEX)	K	44	6.5	5.5
13...40	42	K	85	8.5	7

1.) Kick and drop coil: integrated electronics assembly for temporarily increased performance for inrush (approx. 500 ms) in double coil technology

DTS 1000115690 EN Version: AI Status: RL (released | freigegeben | valide) printed: 11.02.2026

valvesgo.com

7. Product accessories

7.1. Cable glands for ATEX/IECEx terminal box

Note:
A polyamide cable gland is included in the scope of delivery. A nickel-plated brass variant can be ordered for a surcharge, see **"Cable glands for ATEX/IECEX terminal box" on page 23**.

Description	Ex approval		Dimensions	
	Certification	Identification		
Ex cable gland, nickel-plated brass, 6...13 mm 	PTB 04 ATEX 1112 X, IECEx PTB 13.0027X	II 2 G Ex e IIC Gb, II 2 D Ex tb IIIC Db IP68	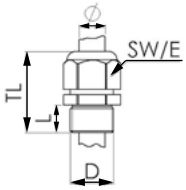	TL 29...37 mm L 6 mm D 20 mm SW 24 mm E 27 mm
Ex cable gland, polyamide, 7...13 mm 	PTB 13 ATEX 1015 X, IECEx PTB 13.0034X	II 2 G Ex e IIC Gb, II 2 D Ex tb IIIC Db IP68	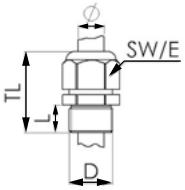	TL 36...45 mm L 10 mm D 20 mm SW 24 mm E 28 mm

7.2. Special tool to turn the terminal box

Note:
This special tool is not included in the scope of delivery of the valve, see **"Cable glands for ATEX/IECEX terminal box" on page 23**.

Description	Components of the set
Set SC02-AC10 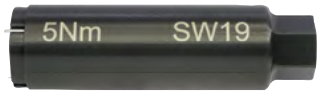	• Special tool • Service manual

DTS 1000115690 EN Version: AI Status: RL (released | freigegeben | valide) printed: 11.02.2026

valvesgo.com

valvesgo.com

8. Ordering information

8.1. Bürkert eShop

Bürkert eShop – Easy ordering and quick delivery

You want to find your desired Bürkert product or spare part quickly and order directly? Our online shop is available for you 24/7. Sign up and enjoy all the benefits.

Order online now

8.2. Bürkert product filter

Bürkert product filter – Get quickly to the right product

You want to select products comfortably based on your technical requirements?
Use the Bürkert product filter and find suitable articles for your application quickly and easily.

Try out our product filter

8.3. Bürkert Product Enquiry Form

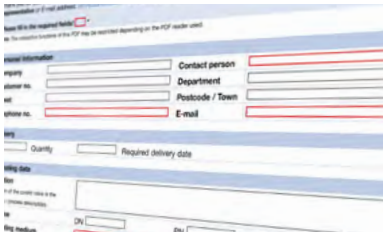

Bürkert Product Enquiry Form – Your enquiry quickly and compactly

Would you like to make a specific product enquiry based on your technical requirements? Use our Product Enquiry Form for this purpose. There you will find all the relevant information for your Bürkert contact. This will enable us to provide you with the best possible advice.

Fill out the form now

DTS 1000115690 EN Version: AI Status: RL (released | freigegeben | valide) printed: 11.02.2026

valvesgo.com

8.4. Ordering chart

Standard variant with brass body

Note:

- Please note that the cable plug must be ordered separately, see "8.5. Ordering chart accessories" on page 22 or separate data sheet **Type 2518** ▶.
- Further variants are available on request.

Circuit function	Port connection	Orifice	K_V value water 1.) 2.)	Pressure range 3.)	Weight 4.)	Article no.		
						024/DC 5.)	024/50	230/50
		[mm]	[m³/h]	[bar]	[kg]	[V/Hz]	[V/Hz]	[V/Hz]
CF A 2/2-way solenoid valve Servo-controlled Normally closed 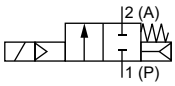 	**Seal material NBR, polyamide coil, medium temperature - 10 °C...+ 80 °C**							
	G ¼	10	1.3	0...10	0.3 (0.5)	221674	221675	221677
	G ⅜	10	1.9	0...10	0.3 (0.5)	221598	221599	221601
	G ½	10	1.9	0...10	0.4 (0.5)	221606	221607	221609
	G ½	13	3.6	0...10	0.4 (0.5)	221602	221603	221605
	G ¾	13	3.6	0...10	0.5 (0.6)	221618	221619	221621
	G ¾	20	8.3	0...10	0.7 (0.8)	221630	221631	221633
	G 1	20	8.3	0...10	0.9 (1.0)	221634	221635	221637
	Seal material NBR, epoxy coil, medium temperature - 10 °C...+ 80 °C							
	G 1	25	11	0...10	1.6 (2.2)	227533	221725	221728
	G 1¼	25	11	0...10	1.7 (2.3)	227534	221729	221732
	G 1¼	40	23	0...10	2.9 (3.4)	20091786 6.)	270895	270899
	G 1½	40	30	0...10	3.2 (3.7)	323686 6.)	221750	221753
	G 2	40	30	0...10	3.4 (3.9)	20004800 6.)	221754	221757
	Seal material FKM, epoxy coil, medium temperature 0 °C...+ 120 °C							
	G ¼	10	1.3	0...10	0.3 (0.5)	221678	221679	221681
	G ⅜	10	1.9	0...10	0.3 (0.5)	221610	221611	221613
	G ½	10	1.9	0...10	0.4 (0.5)	221614	221615	221617
	G ½	13	3.6	0...10	0.4 (0.5)	221622	221623	221625
	G ¾	13	3.6	0...10	0.5 (0.6)	221626	221627	221629
	G ¾	20	8.3	0...10	0.7 (0.8)	221638	221639	221641
	G 1	20	8.3	0...10	0.9 (1.0)	221642	221643	221645
	G 1	25	11	0...10	1.6 (2.2)	227537	221733	221736
	G 1¼	25	11	0...10	1.7 (2.3)	227538	221737	221740
	G 1¼	40	23	0...10	2.9 (3.4)	20091787 6.)	270906	270908
	G 1½	40	30	0...10	3.2 (3.7)	20008169 6.)	227724	227726
	G 2	40	30	0...10	3.4 (3.9)	20008170 6.)	227728	227730
	Seal material EPDM, polyamide coil, medium temperature - 30 °C...+ 90 °C							
	G ¼	10	1.3	0...10	0.3 (0.4)	221670	221671	221673
	G ⅜	10	1.9	0...10	0.3 (0.4)	221646	221647	221649
	G ½	10	1.9	0...10	0.4 (0.5)	221650	221651	221653
	G ½	13	3.6	0...10	0.4 (0.5)	221654	221655	221657
	G ¾	13	3.6	0...10	0.5 (0.6)	221658	221659	221661
	G ¾	20	8.3	0...10	0.7 (0.8)	221662	221663	221665
	G 1	20	8.3	0...10	0.9 (1.0)	221666	221667	221669

DTS 1000115690 EN Version: AI Status: RL (released | freigegeben | valide) printed: 11.02.2026

valvesgo.com

Circuit function	Port connection	Orifice	K_V value water 1.) 2.)	Pressure range 3.)	Weight 4.)	Article no.		
						024/DC 5.)	024/50	230/50
		[mm]	[m³/h]	[bar]	[kg]	[V/Hz]	[V/Hz]	[V/Hz]
CF A 2/2-way solenoid valve Servo-controlled Normally closed 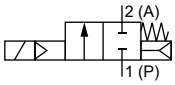	**Seal material EPDM, epoxy coil, medium temperature - 30 °C...+ 100 °C**							
	G 1	25	11	0...10	1.6 (2.2)	227535	221717	221720
	G 1¼	25	11	0...10	1.7 (2.3)	227536	221721	221724
	G 1¼	40	23	0...10	2.9 (3.4)	20060614 6.)	270890	270894
	G 1½	40	30	0...10	3.2 (3.7)	20004798 6.)	221741	221745
	G 2	40	30	0...10	3.4 (3.9)	20004802 6.)	221746	221749

1.) Measurement at + 20 °C, 1 bar 3.) at the valve inlet and free outlet
2.) A differential pressure of 0.5 bar is required to open the full cross section.
3.) Pressure data: overpressure to atmospheric pressure
4.) The values in brackets apply to the weight of the DC variants.
5.) For gas and vacuum applications, a minimum pressure of 0.5 bar is required for DC variants. Alternatively, HP00 variants can be used.
6.) 024 / AC/DC applies to the variants with kick and drop coil.

Standard variant with drinking water approval according to UBA

Circuit function	Port connection	Orifice	K_V value water 1.) 2.)	Pressure range 3.)	Weight 4.)	Article no.		
						024/DC 5.)	024/50	230/50
		[mm]	[m³/h]	[bar]	[kg]	[V/Hz]	[V/Hz]	[V/Hz]
CF A 2/2-way solenoid valve Servo-controlled Normally closed 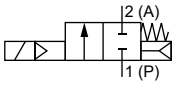	**Seal material EPDM, epoxy coil, medium temperature - 30 °C...+ 90 °C**							
	G ¼	10	1.3	0...10	0.3 (0.4)	20056269	20056273	20056275
	G ⅜	10	1.9	0...10	0.3 (0.4)	20056276	239270	252227
	G ½	10	1.9	0...10	0.4 (0.5)	20056277	20056280	20056282
	G ½	13	3.6	0...10	0.4 (0.5)	20056292	20056285	255143
	G ¾	13	3.6	0...10	0.5 (0.6)	221658	20056293	252111
	G ¾	20	8.3	0...10	0.7 (0.8)	20056294	221663	252399
	G 1	20	8.3	0...10	0.9 (1.0)	20056296	20056297	252401

1.) Measurement at + 20 °C, 1 bar 3.) at the valve inlet and free outlet
2.) A differential pressure of 0.5 bar is required to open the full cross section.
3.) Pressure data: overpressure to atmospheric pressure
4.) The values in brackets apply to the weight of the DC variants.
5.) For gas and vacuum applications, a minimum pressure of 0.5 bar is required for DC variants. Alternatively, HP00 variants can be used.

HP00 variant with brass body

Note:
Preferably used for gas and vacuum applications as well as for liquids with increased flow and tightness requirements at low differential pressure.

Circuit function	Port connection	Orifice	K_V value water 1.)	Pressure range 2.)	Weight	Article no.		
						024/DC	024/50...60	230/50...60
		[mm]	[m³/h]	[bar]	[kg]	[V/Hz]	[V/Hz]	[V/Hz]
CF A 2/2-way solenoid valve Servo-controlled Normally closed 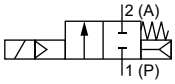	**Brass body, seal material FKM, epoxy coil, medium temperature 0 °C...+ 120 °C**							
	G ½	13	3.6	0...10	0.8	221706	221705	231574
	G ¾	20	8.3	0...10	1.3	221712	221711	221713
	G 1	20	8.3	0...10	1.4	221715	221714	221716
	Brass body, seal material EPDM, epoxy coil, medium temperature - 30 °C...+ 100 °C							
	G ½	13	3.6	0...10	0.8	221694	221693	221695
	G ¾	20	8.3	0...10	1.3	208422	221699	189592
	G 1	20	8.3	0...10	1.4	221703	221702	221704

1.) Measurement at + 20 °C, 1 bar 2.) at the valve inlet and free outlet
2.) Pressure data: overpressure to atmospheric pressure

DTS 1000115690 EN Version: AI Status: RL (released | freigegeben | valide) printed: 11.02.2026

valvesgo.com

HP00 variant: Explosion proofed ATEX/IECEx variant with 3 m cable

Note:

- The Kick and Drop coil (AC/DC) features integrated electronics for short-term power increase and decrease in double coil technology.
- The maximum medium temperature must never exceed the permitted temperature class (T4: + 135 °C, T5: + 100 °C, T6: + 85 °C) minus 5 K.
- Kick and Drop coil max. 6 switching cycles/minute
- Refer to chapter "3. Approvals and conformities" on page 5 for more information about the approvals.

Circuit function	Port connection	Orifice	K_v value water 1.)	Pressure range 2.)	Weight	Article no.	
						024/UC	230...240/UC
		[mm]	[m³/h]	[bar]	[kg]	[V/Hz]	[V/Hz]
CF A 2/2-way solenoid valve Servo-controlled Normally closed 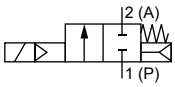	**Brass body, seal material EPDM, KD coil, medium temperature - 30 °C...+ 100 °C 3.)**						
	G ½	13	3.6	0...10	0.8	20051200	20051201
	G ¾	20	8.3	0...10	1.3	20051202	20051203
	Stainless steel body, seal material FKM, KD coil, medium temperature 0 °C...+ 120 °C						
	G ½	13	3.6	0...10	0.8	20031389	20051206
	G ¾	20	8.3	0...10	1.3	20046809	20051207

1.) Measurement at + 20 °C, 1 bar 2.) at the valve inlet and free outlet
2.) Pressure data: overpressure to atmospheric pressure

HP00 variant: Explosion proofed ATEX/IECEx variant with terminal box

Note:

- The Kick and Drop coil (AC/DC) features integrated electronics for short-term power increase and decrease in double coil technology.
- The maximum medium temperature must never exceed the permitted temperature class (T4: + 135 °C, T5: + 100 °C, T6: + 85 °C) minus 5 K.
- Refer to chapter "3. Approvals and conformities" on page 5 for more information about the approvals.

Circuit function	Port connection	Orifice	K_v value water 1.)	Pressure range 2.)	Weight	Article no.	
						024/UC	230...240/UC
		[mm]	[m³/h]	[bar]	[kg]	[V/Hz]	[V/Hz]
CF A 2/2-way solenoid valve Servo-controlled Normally closed 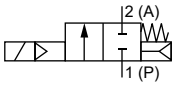	**Brass body, seal material EPDM, KD coil, medium temperature - 30 °C...+ 100 °C**						
	G ½	13	3.6	0...10	0.8	20051208	20051210
	G ¾	20	8.3	0...10	1.3	20051211	20051212
	Stainless steel body, seal material FKM, KD coil, medium temperature 0 °C...+ 120 °C						
	G ½	13	3.6	0...10	0.8	20051213	20051214
	G ¾	20	8.3	0...10	1.3	20018095	20051216

1.) Measurement at + 20 °C, 1 bar 2.) at the valve inlet and free outlet
2.) Pressure data: overpressure to atmospheric pressure

DTS 1000115690 EN Version: AI Status: RL (released | freigegeben | valide) printed: 11.02.2026

valvesgo.com

Standard variant with stainless steel body

Circuit function	Port connection	Orifice	K_V value water 1.) 2.)	Pressure range 3.)	Weight 4.)	Article no.		
						024/DC 5.)	024/50	230/50
		[mm]	[m³/h]	[bar]	[kg]	[V/Hz]	[V/Hz]	[V/Hz]
CF A 2/2-way solenoid valve Servo-controlled Normally closed 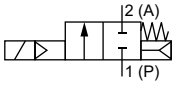 	**Seal material NBR, polyamide coil, medium temperature - 10 °C...+ 80 °C**							
	G ⅜	10	1.9	0...10	0.3 (0.4)	222150	222151	222152
	G ½	13	3.6	0...10	0.4 (0.5)	222156	222157	222158
	G ¾	20	8.3	0...10	0.7 (0.8)	222168	222169	222170
	G 1	20	8.3	0...10	0.9 (1.0)	222171	222172	222173
	Seal material NBR, epoxy coil, medium temperature - 10 °C...+ 80 °C							
	G 1	25	11	0...10	1.6 (2.2)	227546	228429	222193
	G 1¼	25	11	0...10	1.7 (2.3)	227547	228432	222197
	G 1½	40	30	0...10	3.2 (3.7)	20091777 6.)	228435	222201
	G 2	40	30	0...10	3.4 (3.9)	20091780 6.)	228438	222205
	Seal material FKM, epoxy coil, medium temperature 0 °C...+ 120 °C							
	G ⅜	10	1.9	0...10	0.3 (0.4)	221758	221759	221761
	G ½	13	3.6	0...10	0.4 (0.5)	221762	221763	221765
	G ¾	20	8.3	0...10	0.7 (0.8)	222122	222123	222125
	G 1	20	8.3	0...10	0.9 (1.0)	222126	222127	222129
	G 1	25	11	0...10	1.6 (2.2)	227550	228430	222143
	G 1¼	25	11	0...10	1.7 (2.3)	227551	228433	222145
	G 1½	40	30	0...10	3.2 (3.7)	20091784 6.)	228436	222147
	G 2	40	30	0...10	3.4 (3.9)	20091785 6.)	228439	222149
	Seal material EPDM, polyamide coil, medium temperature - 30 °C...+ 90 °C							
	G ⅜	10	1.9	0...10	0.3 (0.4)	222153	222154	222155
	G ½	13	3.6	0...10	0.4 (0.5)	222159	222160	222161
	G ¾	20	8.3	0...10	0.7 (0.8)	222174	222175	222176
	G 1	20	8.3	0...10	0.9 (1.0)	222177	222178	222179
	Seal material EPDM, epoxy coil, medium temperature - 30 °C...+ 100 °C							
	G 1	25	11	0...10	1.6 (2.2)	227548	228431	222195
	G 1¼	25	11	0...10	1.7 (2.3)	227549	228434	222199
	G 1½	40	30	0...10	3.2 (3.7)	20091782 6.)	228437	222203
	G 2	40	30	0...10	3.4 (3.9)	20091783 6.)	228440	222207

1.) Measurement at + 20 °C, 1 bar 3.) at the valve inlet and free outlet
2.) A differential pressure of 0.5 bar is required to open the full cross section.
3.) Pressure data: overpressure to atmospheric pressure
4.) The values in brackets apply to the weight of the DC variants.
5.) For gas and vacuum applications, a minimum pressure of 0.5 bar is required for DC variants. Alternatively, HP00 variants can be used.
6.) 024 / AC/DC applies to the variants with kick and drop coil.

DTS 1000115690 EN Version: AI Status: RL (released | freigegeben | valide) printed: 11.02.2026

valvesgo.com

HP00 variant with stainless steel body

Note:
Preferably used for gas and vacuum applications as well as for liquids with increased flow and tightness requirements at low differential pressure.

Circuit function	Port connection	Orifice	K_V value water 1.)	Pressure range 2.)	Weight	Article no.		
						024/DC	024/50...60	230/50...60
		[mm]	[m³/h]	[bar]	[kg]	[V/Hz]	[V/Hz]	[V/Hz]
CF A 2/2-way solenoid valve Servo-controlled Normally closed 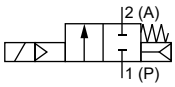	**Seal material FKM, epoxy coil, medium temperature 0 °C...+120 °C**							
	G ½	13	3.6	0...10	0.8	208694	220585	205351
	G ¾	20	8.3	0...10	1.3	222137	222136	222138
	G 1	20	8.3	0...10	1.4	222140	222139	222141
	Seal material EPDM, epoxy coil, medium temperature - 30 °C...+100 °C							
	G ½	13	3.6	0...10	0.8	213132	222166	220584
	G ¾	20	8.3	0...10	1.3	222186	222187	222188
	G 1	20	8.3	0...10	1.4	222189	222190	222191

1.) Measurement at + 20 °C, 1 bar 2.) at the valve inlet and free outlet
2.) Pressure data: overpressure to atmospheric pressure

Gunmetal housing with external thread and drinking water approval according to UBA

Circuit function	Port connection	Orifice	K_V value water 1.) 2.)	Pressure range 3.)	Weight	Article no.		
						024/DC 4.)	024/50	230/50
		[mm]	[m³/h]	[bar]	[kg]	[V/Hz]	[V/Hz]	[V/Hz]
CF A 2/2-way solenoid valve Servo-controlled Normally closed 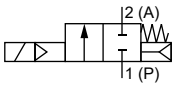	**Seal material EPDM, epoxy coil, medium temperature. Application range of cold and hot water up to + 60 °C**							
	G ½	10	1.9	0...10	0.4	311670	311674	311679
	G ¾	13	3.6	0...10	0.6	311681	311684	311688
	G 1	20	8.3	0...10	1.1	311691	311693	311696

1.) Measurement at + 20 °C, 1 bar 3.) at the valve inlet and free outlet
2.) A differential pressure of 0.5 bar is required to open the full cross section.
3.) Pressure data: overpressure to atmospheric pressure
4.) For gas and vacuum applications, a minimum pressure of 0.5 bar is required for DC variants. Alternatively, HP00 variants can be used.

Standard variant with Kick and Drop coil

Circuit function	Port connection	Orifice	K_V value water	Coil power		Pressure range	Article no.	
				Inrush power	Holding power		024 / AC/DC	230...240/AC
		[mm]	[m³/h]	[W]	[W]	[bar]	[V/Hz]	[V/Hz]
Brass body, G internal thread, seal material FKM/FKM								
CF A 2/2-way solenoid valve Direct-acting Normally closed 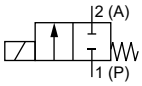	G ⅜	10.0	1.9	20	2	0...10	20047785	20047788
	G ½	13.0	3.6	20	2	0...10	20047786	20047789
				44 1.)	6.5 1.)		20047791	20047793
	G ¾	20.0	8.3	20	2	0...10	20047787	20047790
				44 1.)	6.5 1.)		20047792	20047794
	G 1	25.0	11	85	8.5	0...10	20004797	20048204
	G 1¼	25.0	11	85	8.5	0...10	20048207	20048205
	G 1½	40.0	30	85	8.5	0...10	20008169	20048208
	G 2	40.0	30	85	8.5	0...10	20008170	20048210

1.) Recommended for gas and vacuum applications

DTS 1000115690 EN Version: AI Status: RL (released | freigegeben | valide) printed: 11.02.2026

valvesgo.com

Further variants on request			
	Approval Further information can be found in chapter "3. Approvals and conformities" on page 5.		**Coil** Kick and Drop variant: Coil with energy-saving Kick and Drop electronics in double-coil technology (CZ05)
	Temperature • EPDM variant up to + 100 °C with epoxy coil (NA38) • FKM variant up to + 120 °C with epoxy coil (NA38)		**Material** • Brass dezincification resistant (MZ) • Nickel-plated brass (5 µm) (AF43) • Gunmetal with external thread (DN 10, DN 13, DN 20)
	Process connection NPT, Rc, welded connection		**Voltage** Further Voltages available

8.5. Ordering chart accessories

Cable plug Type 2509, form A according to DIN EN 175301 - 803

Note:

- Dimensions in mm
- Without wiring (standard)
- The cable plug Type 2509 meets the requirements of ATEX Cat. 3 GD in assembly with a Bürkert solenoid valve.
- The cable plug Type 2509 meets the requirements of UL Listed (UL 429) in assembly with a Bürkert solenoid valve.
- Refer to data sheet **Type 2509** ▶ for more information about the cable plug.

Cable plug	Dimensions	Variant	Voltage	Article no.
	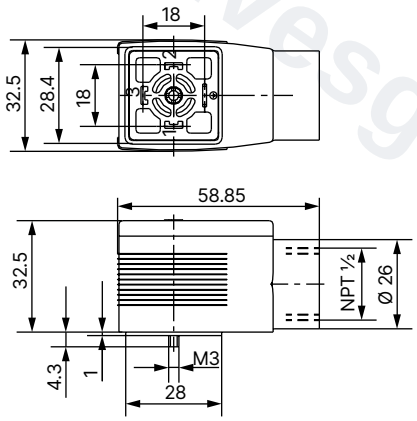	Without wiring	0...250 V AC/DC	137943

Cable plug Type 2518, form A according to DIN EN 175301 - 803

Note:

- Dimensions in mm
- For further variants see data sheet **Type 2518** ▶.

Cable plug	Dimensions	Variant	Voltage	Article no.
	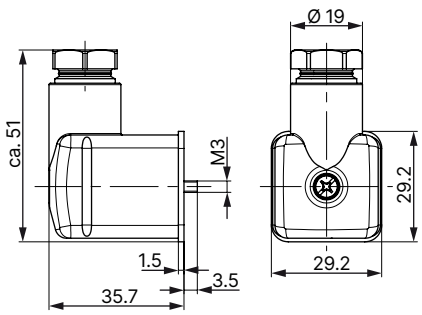	Without wiring (AC/DC)	0...250 V AC/DC	314802
		With LED (AC/DC)	12...24 V AC/DC	314812
		With LED and varistor (AC/DC)	12...24 V AC/DC	314820
		With rectifier, LED and varistor	12...24 V AC/DC	314816
		Without wiring (AC/DC) with silicone seal for higher ambient temperature, e.g. steam variant (NA07)	0...250 V AC/DC	361687

DTS 1000115690 EN Version: AI Status: RL (released | freigegeben | valide) printed: 11.02.2026

valvesgo.com

Cable glands for ATEX/IECEX terminal box

Note:

- A polyamide cable gland is included in the scope of delivery. A nickel-plated brass variant can be ordered for a surcharge.
- Refer to chapter **"7.1. Cable glands for ATEX/IECEx terminal box" on page 15** for more information about Ex cable glands.
- Refer to chapter **"7.2. Special tool to turn the terminal box" on page 15** for more information about special tool.

Description	Article no.
Ex cable gland, nickel-plated brass, 6...13 mm [1.)]	773278
Ex cable gland, polyamide, 7...13 mm [1.)]	773277
Set SC02-AC10: special tool [2.)] incl. service manual	293488

1.) Cable diameter
2.) Not included in the scope of delivery of the valve

Timer Type 1087, form A according to DIN EN 175301 - 803

Note:
Refer to data sheet **Type 1087** ▶ for more information about the timer.

Timer	Approval	Product code	Voltage range	Article no.
Analogue variant	–	1087-A-BCH-UC - 28	10...30 V AC/DC	348828
	–	1087-A-BDK-UC - 28	24...240 V AC/DC	348829
	cURus	1087-A-BCH-UC- 28*PU01	10...30 V AC/DC	348906
	cURus	1087-A-BDK-UC- 28*PU01	24...240 V AC/DC	348907
Digital variant	–	1087-A-BFW-UC - 29	10...48 V AC/DC	348830
	–	1087-A-BDX-UC - 29	110...240 V AC/DC	348831
	cURus	1087-A-BFW-UC- 29*PU01	10...48 V AC/DC	348908
	cURus	1087-A-BDX-UC- 29*PU01	110...240 V AC/DC	348909

DTS 1000115690 EN Version: AI Status: RL (released | freigegeben | valide) printed: 11.02.2026

valvesgo.com