Servo-assisted 2/2-way piston valve

- Safety shut-off valve in fuel cell systems and other hydrogen applications
- Very compact solenoid valve with reliably high tightness and service life
- Available for up to orifice 12 mm and pressure range 40 bar
- Available as flange or cartridge variant for quick system integration
- Degree of protection IP65 or IP6K9K with automotive plug

Product variants described in the data sheet may differ from the product presentation and description.

Can be combined with

Type 2518
Cable plug,
form A according to
DIN EN 175301 - 803

Type 2509
Cable plug,
form A according to
DIN EN 175301-803

Type 6020
Direct-acting 2-way
proportional valve

Type 6030
Direct-acting 2/2-way
direct-acting plunger valve

Type description

The valve 6440 is a servo-assisted piston valve. The stopper and the core guide tube are welded together to increase pressure resistance and leak-tightness. The coils are moulded with highly chemically resistant epoxy. Sliding rings increase the service life for dry gases. Cartridge and flange connections, and solenoids with automotive plugs (IP6K9K), are available for optimised use in fuel cells.

valvesgo.com

DTS 1000578533 EN Version: L Status: RL (released | freigegeben | valide) printed: 20.05.2026

© Christian Bürkert GmbH & Co. KG, Subject to alteration

valvesgo.com

Table of contents

1. General technical data 3

2. Circuit functions 4

3. Approvals and conformities 4

3.1. General notes 4
3.2. Conformity 4
3.3. Standards 4
3.4. Explosion protection 5
3.5. North America (USA/Canada) 5
3.6. Others 6
DNV GL classification 6

4. Materials 6

4.1. Bürkert resistApp 6
4.2. Material specifications 6

5. Dimensions 7

5.1. Threaded variant 7
Complete valve 7
Solenoid coil dimensions 8
5.2. Cartridge variant 9
Complete valve 9
Solenoid coil dimensions 10
Cartridge connection diagram 10
5.3. Flange variant 11
Complete valve 11
Solenoid coil dimensions 12
Flange connection diagram 13
5.4. ATEX/IECEx variant (PX58 and PX38) 14

6. Performance specifications 15

6.1. Power consumption 15

7. Product accessories 15

7.1. Cable glands for ATEX/IECEX terminal box 15
7.2. Special tool to turn the terminal box 16

8. Ordering information 16

8.1. Bürkert eShop 16
8.2. Bürkert product filter 16
8.3. Bürkert Product Enquiry Form 16
8.4. Ordering chart for stationary applications, cable plug form A according to DIN EN 175301 - 803 (IP65 coil) 17
Standard variant 17
Variant with Kick and Drop coil 18
ATEX/IECEx cable variant 19
8.5. Ordering chart of mobile applications with automotive plug (IP6K9K coil) 20
8.6. Ordering chart accessories 20
Cable plug Type 2518, form A according to DIN EN 175301 - 803 20
Cable plug Type 2509, form A according to DIN EN 175301 - 803 21
Cable glands for ATEX/IECEX terminal box 21
Mounting bracket 21

DTS 1000578533 EN Version: L Status: RL (released | freigegeben | valide) printed: 20.05.2026

valvesgo.com

1. General technical data

Product properties	
Dimensions	Further information can be found in chapter "5. Dimensions" on page 7.
Material	
Seal	EPDM
Housing	Stainless steel 1.4404/316L
Coil	Epoxy
Tightness [1.)]	
Internal leakage rate	1×10^{-4} mbar l/s (> 1.5 bar differential pressure)
External leakage rate	1×10^{-4} mbar l/s
Pressure	
Pressure level	DN 6/DN 8: PN 40 bar DN 12/DN 16: PN 25 bar The maximum switchable differential pressure can be found in chapter "8. Ordering information" on page 16.
Burst pressure	> 250 bar for flange and threaded body > 125 bar for cartridge body DN 6, DN 8 > 110 bar for cartridge body DN 12
Orifice	DN 6, DN 8, DN 12, DN 16
Circuit function	A Further information can be found in chapter "2. Circuit functions" on page 4.
Thermal insulation class of solenoid coil	Epoxy coil class H
Performance data	
Duty cycle	100 % continuous operation Power must be reduced to 25 % of the nominal power (holding phase) with the aid of current control or PWM signal after max. 500 ms (switch-on pulse) for mobile applications with increased ambient temperature.
Switching time [2.)]	
DN 6, DN 8	Opening: 10...20 ms Closing: 40...50 ms
DN 12, DN 16	Opening: 20...30 ms Closing: 120...200 ms
Electrical data	
Power consumption	Further information can be found in chapter "6. Performance specifications" on page 15.
Voltage tolerance	
Mobile applications	12 V: 9 V...16 V 24 V: 18 V...32 V
Stationary applications	± 10 %
Medium data	
Operating medium	Neutral gases (e.g. compressed air, nitrogen) Optimised for hydrogen
Medium temperature	- 40 °C...+ 90 °C
Viscosity	Max. 21 mm^2/s (21 cSt)
Product connection	
Electrical connection	• Plug contacts according to DIN EN 175 301 - 803 form A for cable plug **Type 2518** ▶. Further information can be found in chapter "Cable plug Type 2518, form A according to DIN EN 175301 - 803" on page 20. • Plug contacts according to DIN EN 175 301 - 803 form A for cable plug **Type 2509** ▶. Further information can be found in chapter "Cable plug Type 2509, form A according to DIN EN 175301 - 803" on page 21. Automotive plugs for IP6K9K coil variants: Plug KOSTAL MLK1.2, 2-pin, coding A (male) Plug TE MCON 1.2, 2-pin, coding A (male) Other plug shapes on request
Port connection	Cartridge, flange, G ¼, G ⅜, G ½, G ¾, NPT ¼, NPT ⅜, NPT ½, NPT ¾, SAE UNF 9⁄16 - 18, SAE UNF ¾ - 16

DTS 1000578533 EN Version: L Status: RL (released | freigegeben | valide) printed: 20.05.2026

valvesgo.com

Approvals and conformities	
Degree of protection	Standard: IP65 with cable plug **Type 2518** ▶ NEMA 4X with cable plug **Type 2509** ▶ for stainless steel variants (other variants on request) Automotive Coil: IP6K acc. to ISO 20653:2013 IPX7 acc. to ISO 20653:2013 (submersion test acc. to ISO 16750 - 4:2010) IPX9K acc. to ISO 20653:2013 This degree of protection can only be guaranteed as long as the coil is not removed from the valve.
Explosion protection	Further information can be found in chapter **"3.4. Explosion protection" on page 5**.
North America (USA/Canada)	Further information can be found in chapter **"3.5. North America (USA/Canada)" on page 5**.
Others	Further information can be found in chapter **"3.6. Others" on page 6**.
Environment and installation	
Installation position	As required, preferably with actuator upright
Ambient temperature	- 40 °C...+ 55 °C/+ 75 °C for stationary applications depending on performance level - 40 °C...+ 85 °C for mobile applications [3.)]

1.) The limit values listed do not apply to valves with lower tightness requirements (var. code PC93). This restriction does not include a standard helium leak test.
2.) Measurement at + 20 °C, 6 bar at the valve outlet, opening: pressure build-up 0...90 %, closing: pressure reduction 100...10 %
3.) Power must be reduced to 25 % of the nominal power (holding phase) with the aid of current control or PWM signal after max. 500 ms (switch-on pulse).

2. Circuit functions

Symbol	Description
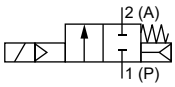	**Circuit function A (CF A)** 2/2-way solenoid valve Servo-controlled Normally closed

3. Approvals and conformities

3.1. General notes

- The approvals and conformities listed below must be stated when making enquiries. This is the only way to ensure that the product complies with all required specifications.
- Not all available variants can be supplied with the below mentioned approvals or conformities.

3.2. Conformity

In accordance with the Declaration of conformity, the product is compliant with the EU Directives.

3.3. Standards

The applied standards which are used to demonstrate compliance with the EU Directives are listed in the EU-Type Examination Certificate and/or the EU Declaration of Conformity.

DTS 1000578533 EN Version: L Status: RL (released | freigegeben | valide) printed: 20.05.2026

valvesgo.com

3.4. Explosion protection

Approval	Description
	Optional: Explosion protection according to category 2 (zone 1/21) Ex marking of the components according to the following table:

Coil Type AC10	Coil Type AC19
Coil with cable outlet	
ATEX: EPS 18 ATEX 1232 X II 2G Ex mb IIC T4 Gb II 2D Ex mb IIIC T130 °C Db **IECEx:** IECEx EPS 18.0110 X Ex mb IIC T4 Gb Ex mb IIIC T130 °C Db	**ATEX:** EPS 16 ATEX 1072 X II 2G Ex mb IIC T4 Gb II 2D Ex mb IIIC T130 °C Db **IECEx:** IECEx EPS 16.0030 X II 2G Ex mb IIC T4 Gb II 2D Ex mb IIIC T130 °C Db
Coil with terminal box	
ATEX: EPS 18 ATEX 1232 X II 2G Ex eb mb IIC T4 Gb II 2D Ex mb tb IIIC T130 °C Db **IECEx:** IECEx EPS 18.0110 X Ex eb mb IIC T4 Gb Ex mb tb IIIC T130 °C Db	**ATEX:** EPS 16 ATEX 1072 X II 2G Ex eb mb IIC T4 Gb II 2D Ex mb tb IIIC T130 °C Db **IECEx:** IECEx EPS 16.0030 X II 2G Ex eb mb IIC T4 Gb II 2D Ex mb tb IIIC T130 °C Db

Optional: Explosion protection according to category 3 (zone 2/22)

Ex marking of the components according to the following table:

Coil Type AC10	Coil Type AC19
Coil with plug contacts form A and cable plug Type 2509	
ATEX: EPS 21 ATEX 1234 X II 3G Ex ec IIC T4 Gc II 3D Ex tc IIIC T135 °C Dc **IECEx:** IECEx EPS 21.0078X Ex ec IIC T4 Gc Ex tc IIIC T135 °C Dc	**ATEX:** EPS 22 ATEX 1136 X II 3G Ex ec IIC T3 Gc II 3D Ex tc IIIC T200 °C Dc **IECEx:** IECEx EPS 22.0018 X Ex ec IIC T3 Gc Ex tc IIIC T200 °C Dc

3.5. North America (USA/Canada)

Approval	Description
c UL us LISTED SOLENOID FOR USE IN HAZARDOUS LOCATIONS E504714	**Optional: UL Hazardous Locations – Explosion Protection (valid for coils)** UL Listed for Hazardous Locations for USA and Canada Class I, Zone 1 Class I, Division 2, Group A, B, C and D Class II + III, Division 2, Group F and G
C US	**Optional: CSA for Canada and the USA (valid for valves)** The valves are CSA approved for Canada and the USA as a Safety Shutoff Valve for hydrogen according to: • UL 429 (electrically operated valves) • CSA 139 (electrically operated valves)

DTS 1000578533 EN Version: L Status: RL (released | freigegeben | valide) printed: 20.05.2026

valvesgo.com

3.6. Others

DNV GL classification

Approval	Description
TYPE APPROVED PRODUCT DNV DNV.COM/AF	**Optional: DNV GL classification – Ships, offshore units, and high speed and light craft** The products are accepted for installation on all vessels classed by DNV GL.

4. Materials

4.1. Bürkert resistApp

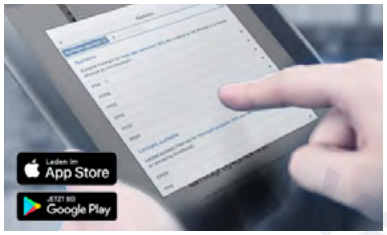

Bürkert resistApp – Chemical resistance chart

You want to ensure the reliability and durability of the materials in your individual application case? Verify your combination of media and materials on our website or in our resistApp.

Start chemical resistance check

4.2. Material specifications

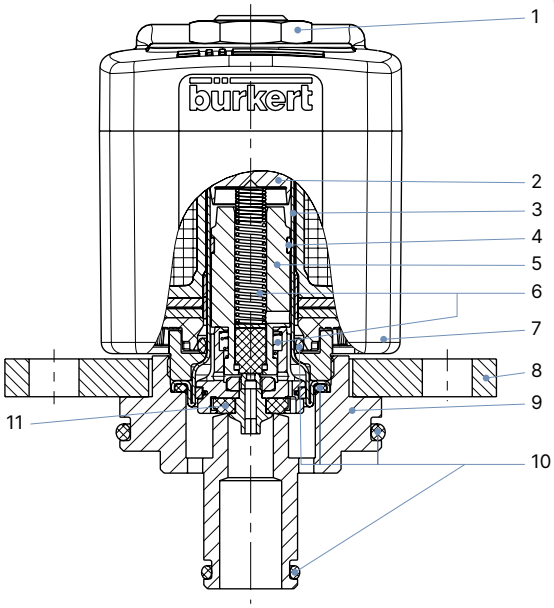

No.	Element	Material
1	Nut	Stainless steel 1.4305/303 [1.)], PTFE-coated
2	Stopper	Stainless steel 1.4113/434 [1.)]
3	Core guide tube	Stainless steel 1.4303/305 [1.)]/308 [1.)]
4	Guide ring	PTFE carbon-filled
5	Core	Stainless steel 1.4113/434 [1.)]
6	Spring	Stainless steel 1.4310/301 [1.)]
7	Coil	Epoxide
8	Retaining plate	Stainless steel 1.4301/304 [1.)]
9	Body	Stainless steel 1.4404/1.4571/316L [1.)]/316Ti [1.)]
10	External seal	EPDM
11	Whole piston	Stainless steel 1.4305/303 [1.)] PPS PTFE carbon-filled EPDM

1.) Material designation according to AISI

DTS 1000578533 EN Version: L Status: RL (released | freigegeben | valide) printed: 20.05.2026

valvesgo.com

5. Dimensions

5.1. Threaded variant

Complete valve

Note:

- Dimensions in mm
- The corresponding dimensions of the solenoid coil can be found in chapter **"Solenoid coil dimensions" on page 8**.

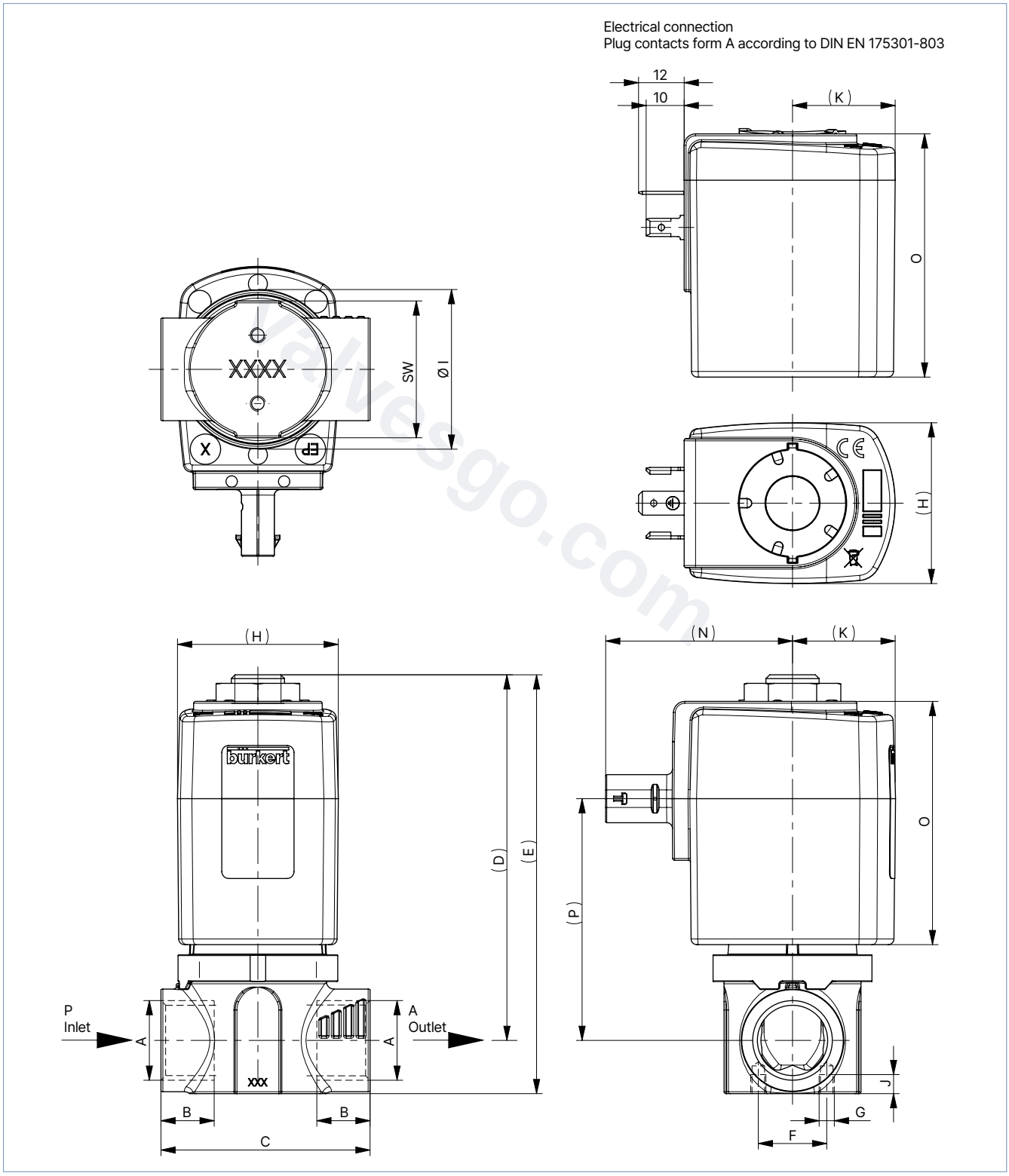

DTS 1000578533 EN Version: L Status: RL (released | freigegeben | valide) printed: 20.05.2026

valvesgo.com

DN	A (port connection)	B	C	(D)	(E)	F	G	I	J	(P)	SW
	[inch]	[mm]	[mm]	[mm]	[mm]	[mm]	[mm]	[mm]	[mm]	[mm]	[mm]
6	G ¼	12	40	61	71	18	M4	27	4.5	41.5	24
	NPT ¼	10									
	Rc ¼	9.7									
8	G ¼	12	50	62	74					42.5	
	NPT ¼	10									
	Rc ¼	9.7									
	SAE 9⁄16 - 18 UNF- 2B	12.7									
6/8	G ⅜	12									
	NPT ⅜	10.3									
	RC ⅜	10.1									
12	G ½	14	55	96	110			42	5	62	36
	NPT ½	13.7									
	RC ½	13.2									
	SAE ¾ - 16 UNF- 2B	14.3									
16	G ¾	16		99	115	–	–		–		
	NPT ¾	14									
	RC¾	14.5									

Solenoid coil dimensions

Note:
The corresponding dimensions to the letters mentioned can be found in chapter **"Complete valve" on page 7**.

DN	Electrical connection	Coil size	(H)	(K)	(N)	O
			[mm]	[mm]	[mm]	[mm]
6/8	Form A according to DIN EN 175301 - 803	5	32	21	–	41
		6	40	24	–	
	Plug KOSTAL MLK1.2 / TE MCON 1.2, 2-pin, coding A (male)				48	
12/16	Form A according to DIN EN 175301 - 803	K	42	27	–	64
	Plug KOSTAL MLK1.2 / TE MCON 1.2, 2-pin, coding A (male)				49	

DTS 1000578533 EN Version: L Status: RL (released | freigegeben | valide) printed: 20.05.2026

valvesgo.com

valvesgo.com

DTS 1000578533 EN Version: L Status: RL (released | freigegeben | valide) printed: 20.05.2026

5.2. Cartridge variant

Complete valve

Note:

- Dimensions in mm
- The corresponding dimensions of the solenoid coil can be found in chapter "Solenoid coil dimensions" on page 10.

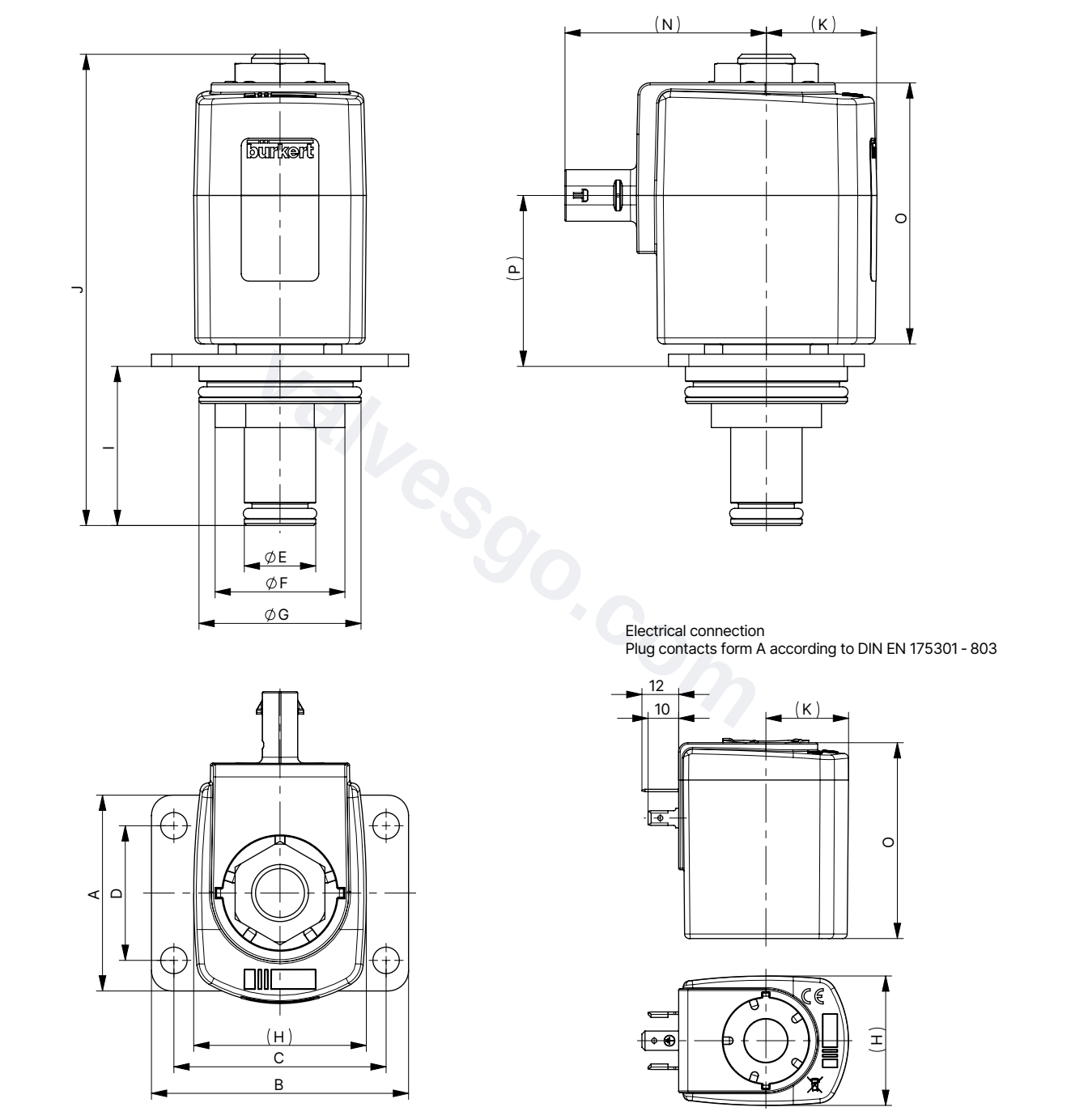

DN	Port connection	A	B	C	D	ØE	ØF	ØG	I	(J)	(P)
6/8	FC16	55	55	52	–	12.4	23.9	34.6	25.4	76	31
12	FC17	48	63	52	33	17.5	31.8	39.7	39	113	42

valvesgo.com

Solenoid coil dimensions

Note:
The corresponding dimensions to the letters mentioned can be found in chapter **"Complete valve" on page 9.**

DN	Electrical connection	Coil size	(H) [mm]	(K) [mm]	(N) [mm]	O [mm]
6/8	Form A according to DIN EN 175301 - 803	5	32	21	–	41
		6	40	24	–	
	Plug KOSTAL MLK1.2 / TE MCON 1.2, 2-pin, coding A (male)				48	
12	Form A according to DIN EN 175301 - 803	K	42	27	–	64
	Plug KOSTAL MLK1.2 / TE MCON 1.2, 2-pin, coding A (male)				49	

Cartridge connection diagram

Note:
Dimensions in mm

Connection contour FC16

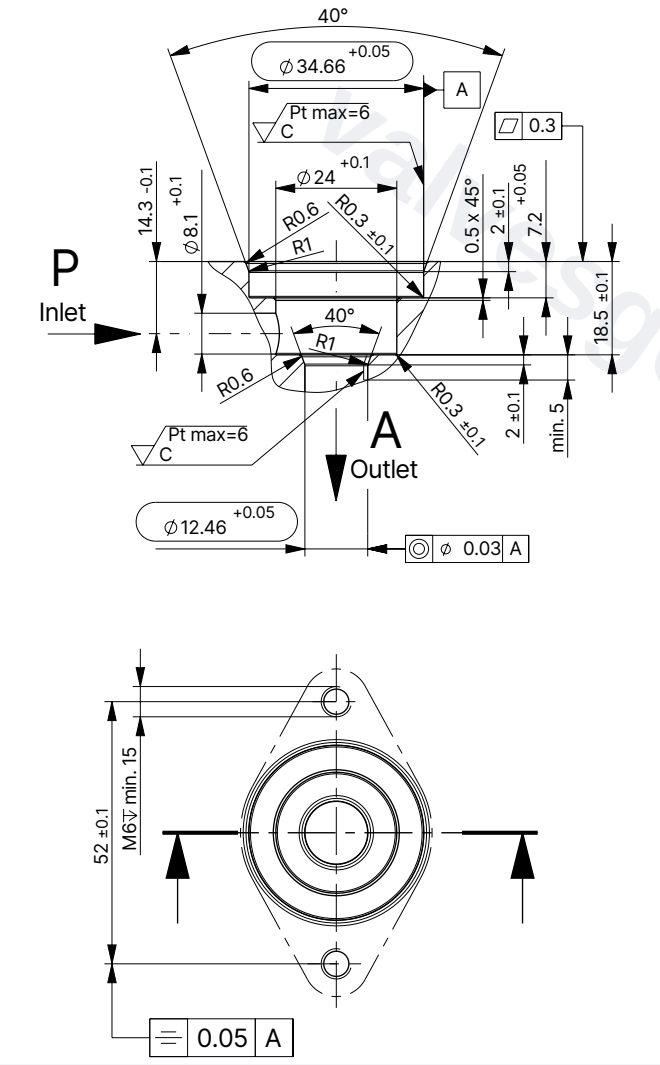

Connection contour FC17

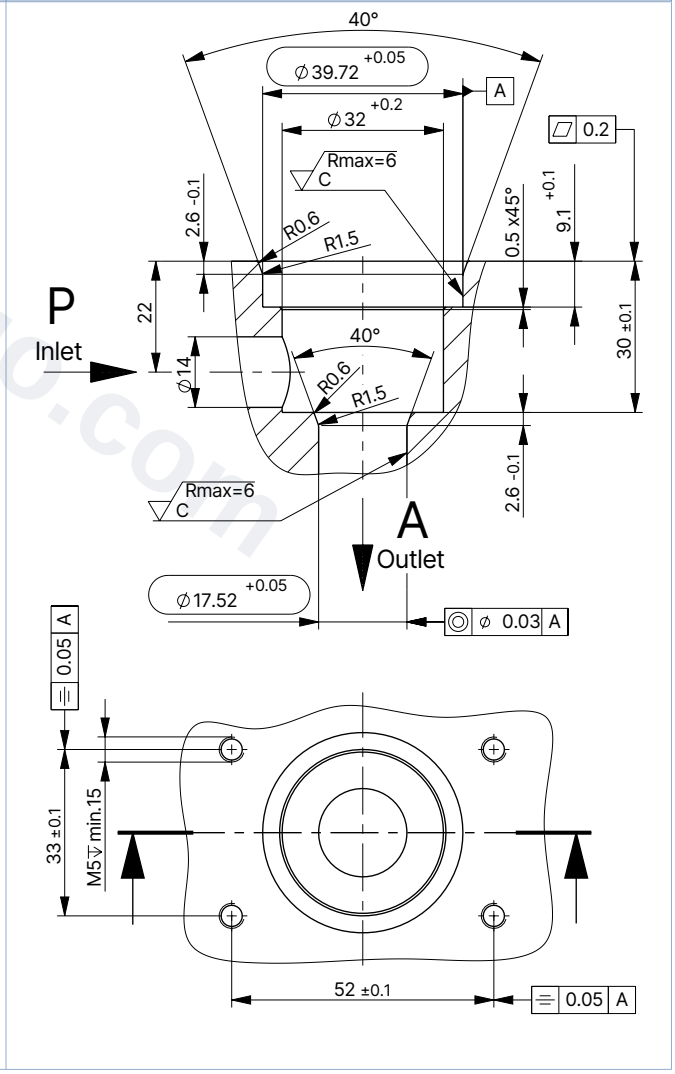

DTS 1000578533 EN Version: L Status: RL (released | freigegeben | valide) printed: 20.05.2026

valvesgo.com

5.3. Flange variant

Complete valve

Note:

- Dimensions in mm
- The corresponding dimensions of the solenoid coil can be found in chapter **"Solenoid coil dimensions" on page 12**.

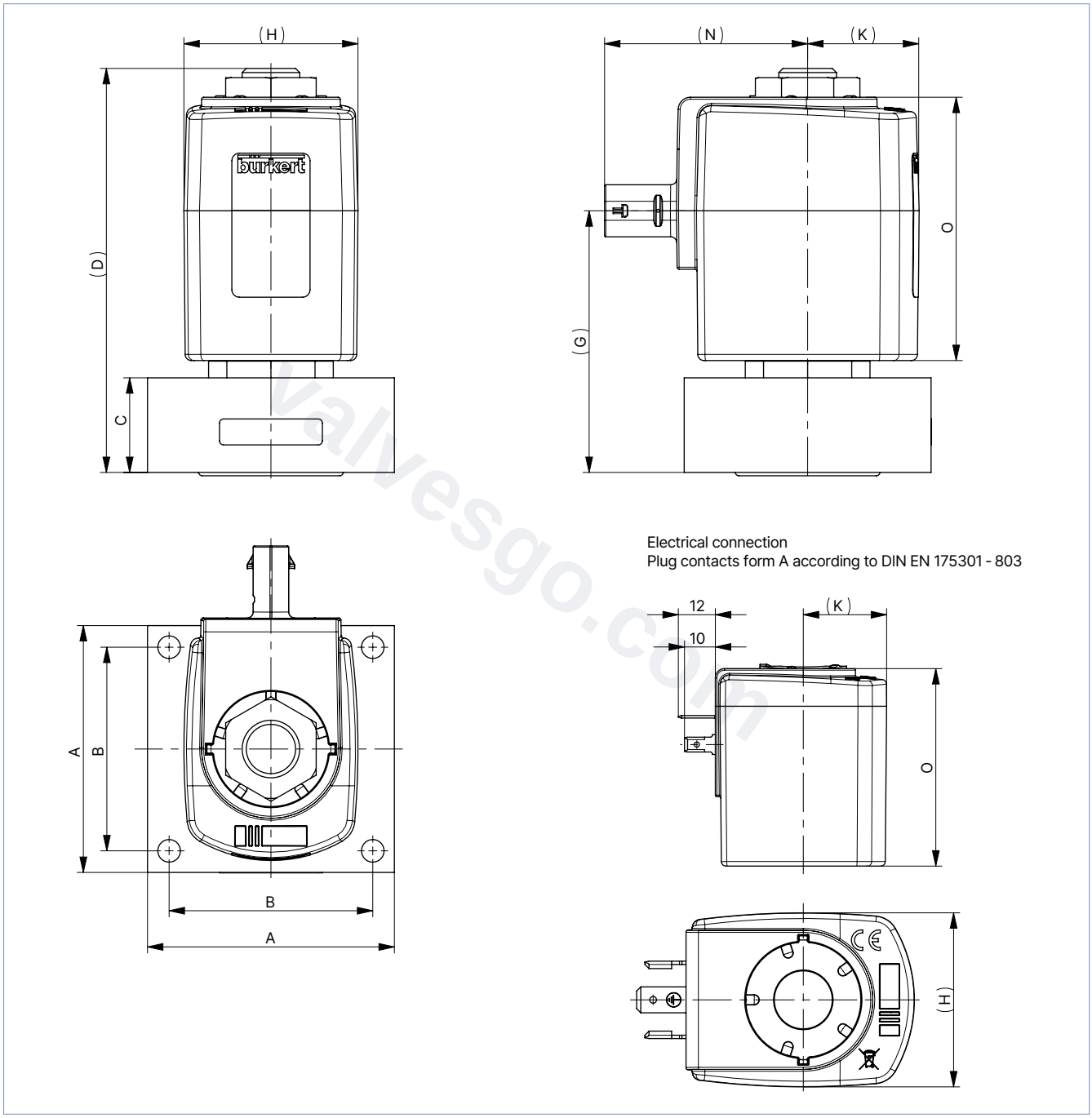

DN	Port connection	A	B	C	(D)	(G)
6/8	FK14	55	46	13	58	38.5
12	FK17	60	49.5	23	98	64

DTS 1000578533 EN Version: L Status: RL (released | freigegeben | valide) printed: 20.05.2026

valvesgo.com

Solenoid coil dimensions

Note:
The corresponding dimensions to the letters mentioned can be found in chapter "Complete valve" on page 11.

DN	Electrical connection	Coil size	(H) [mm]	(K) [mm]	(N) [mm]	O [mm]
6/8	Form A according to DIN EN 175301 - 803	5	32	21	–	41
		6	40	24	–	
	Plug KOSTAL MLK1.2 / TE MCON 1.2, 2-pin, coding A (male)				48	
12	Form A according to DIN EN 175301 - 803	K	42	27	–	64
	Plug KOSTAL MLK1.2 / TE MCON 1.2, 2-pin, coding A (male)				49	

DTS 1000578533 EN Version: L Status: RL (released | freigegeben | valide) printed: 20.05.2026

valvesgo.com

valvesgo.com

Flange connection diagram

Note:

- Dimensions in mm
- P = Inlet, A = Outlet
- The flow openings (P) of the valve body and connection block must be arranged one above the other in order to achieve the K_V value specified in the data sheet. If this is not the case, minor restrictions in the K_V value may occur.

Connection contour FK14 DN 6

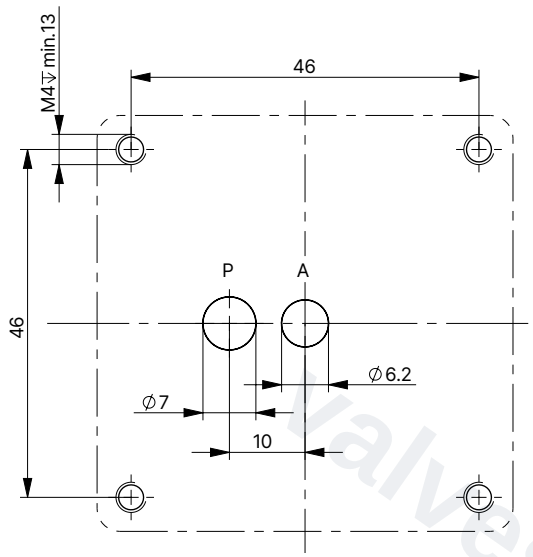

Connection contour FK17

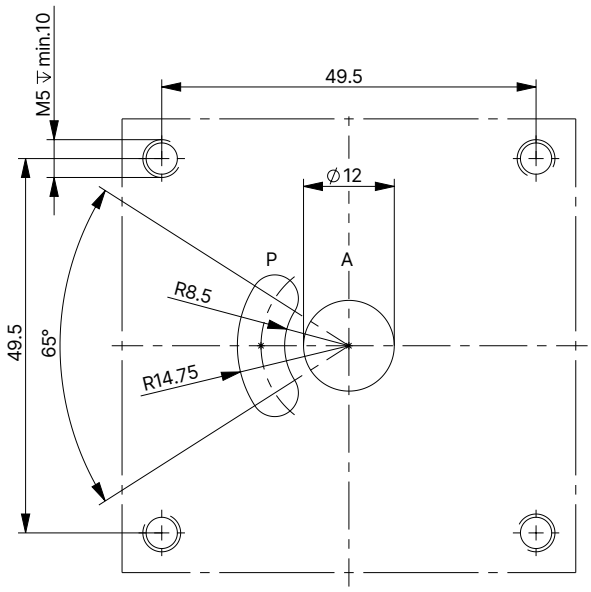

Connection contour FK14 DN 8

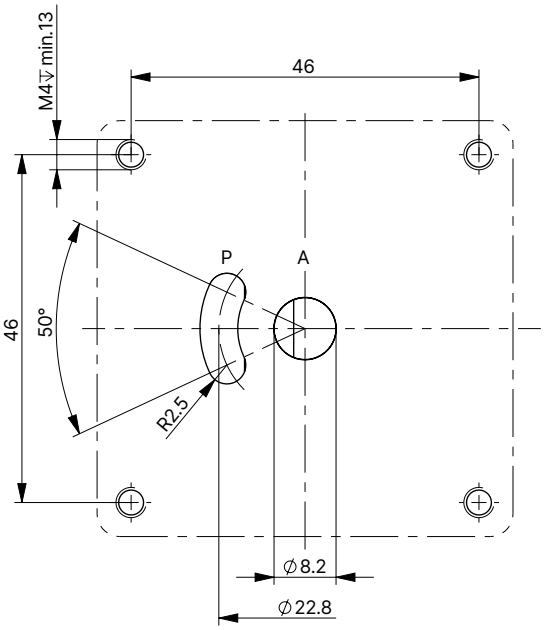

DTS 1000578533 EN Version: L Status: RL (released | freigegeben | valide) printed: 20.05.2026

Valvesgo.com

valvesgo.com

5.4. ATEX/IECEx variant (PX58 and PX38)

Note:
Dimensions in mm

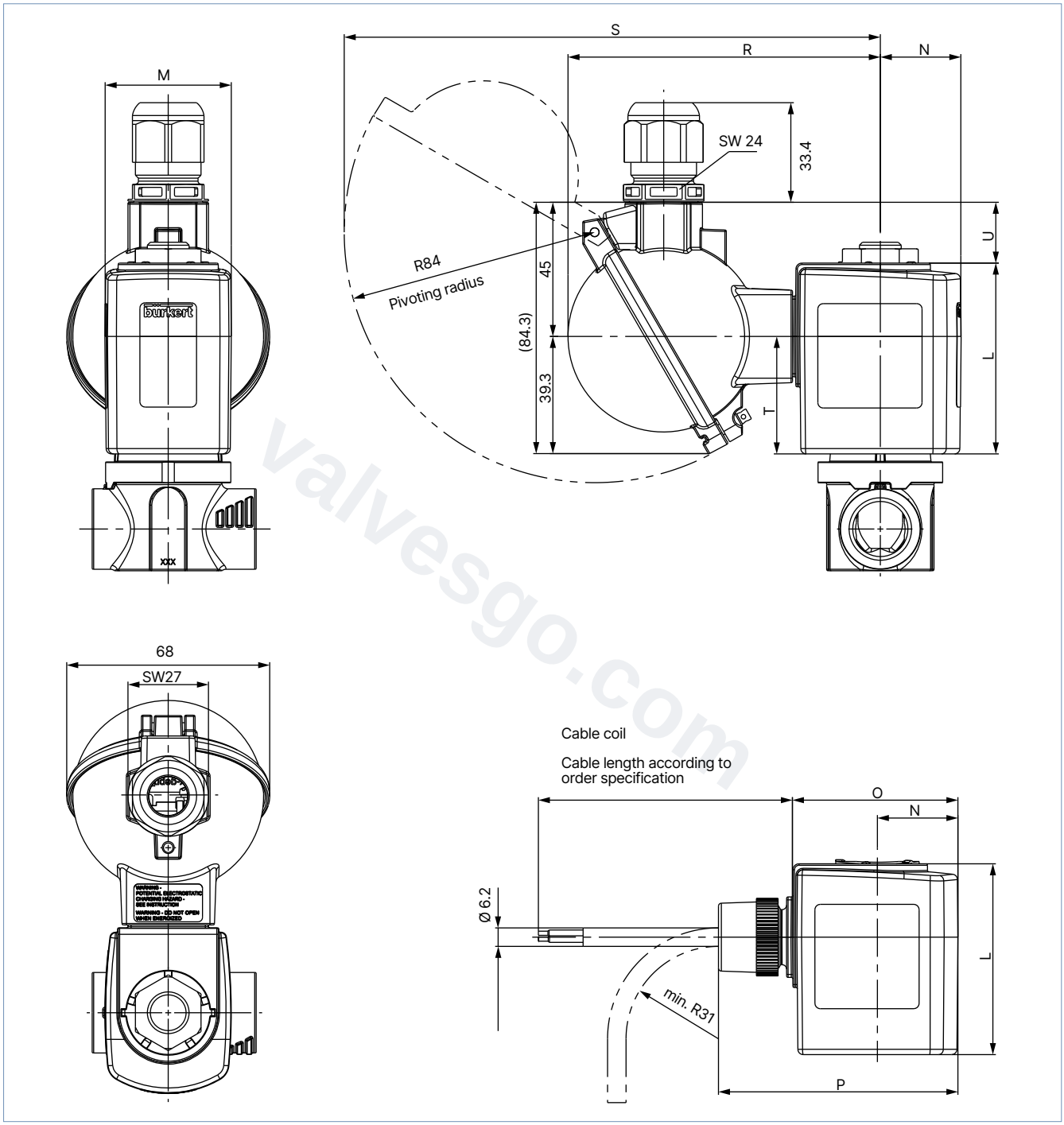

Var. Code	Coil size	(M)	(N)	(O)	(P)	(L)	(R)	(S)	(T)	(U)
PX58	6	40	24	52	75	41	103	178	26	30
PX38	K	42	27	56	80	64	105	180	40	20

DTS 1000578533 EN Version: L Status: RL (released | freigegeben | valide) printed: 20.05.2026

valvesgo.com

6. Performance specifications

6.1. Power consumption

Note:
The Kick and Drop coil (AC/DC) features integrated electronics for short-term power increase and decrease in double coil technology.

Orifice	Coil size	DC		Kick and Drop coil AC/DC		
		Cold power	Warm power	Cold power Inrush power	Cold power Holding power	Warm power Holding power
DN	[mm]	[W]	[W]	[W] 500 ms	[W]	[W]
6/8	32 (5)	12	10	–	–	–
	40 (6)	14	12	–	–	–
		16	14	–	–	–
		–	–	20	2	2
	40 (6) EX	9	7.5	–	–	–
12/16	42 (K)	21	16	–	–	–
		32	20	–	–	–
		–	–	44	6.5	5.5
	42 (K) EX	15	12	44	6.5	5.5

7. Product accessories

7.1. Cable glands for ATEX/IECEX terminal box

Note:
A polyamide cable gland is included in the scope of delivery. A nickel-plated brass variant can be ordered for a surcharge, see **"Cable glands for ATEX/IECEX terminal box" on page 21**.

Description	Ex approval		Dimensions	
	Certification	Identification		
Ex cable gland, nickel-plated brass, 6...13 mm	PTB 04 ATEX 1112 X, IECEx PTB 13.0027X	II 2 G Ex e IIC Gb, II 2 D Ex tb IIIC Db IP68	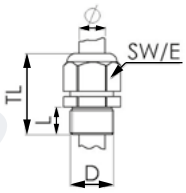	TL 29...37 mm L 6 mm D 20 mm SW 24 mm E 27 mm
Ex cable gland, polyamide, 7...13 mm	PTB 13 ATEX 1015 X, IECEx PTB 13.0034X	II 2 G Ex e IIC Gb, II 2 D Ex tb IIIC Db IP68	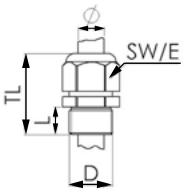	TL 36...45 mm L 10 mm D 20 mm SW 24 mm E 28 mm

DTS 1000578533 EN Version: L Status: RL (released | freigegeben | valide) printed: 20.05.2026

valvesgo.com

7.2. Special tool to turn the terminal box

Note:
This special tool is not included in the scope of delivery of the valve, see "Cable glands for ATEX/IECEX terminal box" on page 21.

Description	Components of the set
Set SC02-AC10 	• Special tool • Service manual

8. Ordering information

8.1. Bürkert eShop

Bürkert eShop – Easy ordering and quick delivery

You want to find your desired Bürkert product or spare part quickly and order directly? Our online shop is available for you 24/7. Sign up and enjoy all the benefits.

Order online now

8.2. Bürkert product filter

Bürkert product filter – Get quickly to the right product

You want to select products comfortably based on your technical requirements?
Use the Bürkert product filter and find suitable articles for your application quickly and easily.

Try out our product filter

8.3. Bürkert Product Enquiry Form

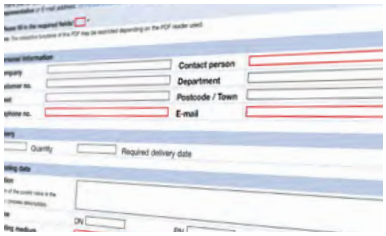

Bürkert Product Enquiry Form – Your enquiry quickly and compactly

Would you like to make a specific product enquiry based on your technical requirements? Use our Product Enquiry Form for this purpose. There you will find all the relevant information for your Bürkert contact. This will enable us to provide you with the best possible advice.

Fill out the form now

DTS 1000578533 EN Version: L Status: RL (released | freigegeben | valide) printed: 20.05.2026

valvesgo.com

8.4. Ordering chart for stationary applications, cable plug form A according to DIN EN 175301 - 803 (IP65 coil)

Standard variant

Note:

- Please note that the cable plug must be ordered separately, see **"Cable plug Type 2518, form A according to DIN EN 175301 - 803" on page 20** or separate data sheet **Type 2518** ▶.
- Further variants with alternative voltages, NPT or RC internal threads are available on request.

Circuit function	Port connection	Orifice	K_V value water	Coil power	Pressure range (MAWP 1.) Ambient temperature + 75 °C	Pressure range (MAWP 1.) Ambient temperature + 55 °C	Coil size	Article no. 024/DC
		[mm]	[m³/h]	[W]	[bar]	[bar]	[mm]	[V/Hz]
Stainless steel body, seal material EPDM/EPDM								
CF A 2/2-way solenoid valve Servo-controlled Normally closed 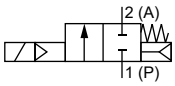	**Threaded connection with G internal thread**							
	G ¼	6	0.6	12	0...20	–	32	20044959
				14	0...25	–	40	20092726
		8	1.1	12	–	0...20	32	20092742
					0...16	–		20092743
				14	0...25	–	40	20092745
	G ⅜	6	0.6	12	0...20	–	32	20092733
				14	0...25	–	40	20081285
		8	1.1	12	–	0...20	32	20092751
					0...16	–		20092752
				14	0...25	–	40	20092754
	G ½	12	2.2	21	–	0...20	42	20092760
					0...16	–		20044518
				32 2.)	0...20	–		20064878
	G ¾	16	3.5	32 2.)	0...20	–	42	20109325
	Cartridge body							
	FC16	6	0.7	12	0...20	–	32	20044961
				14	0...25	–	40	20092767
		8	1.1	12	–	0...20	32	20092775
					0...16	–		20092776
				14	0...25	–	40	20092778
	FC17	12	2.3	21	–	0...20	42	20092782
					0...16	–		20043705
				32 2.)	0...20	–		20092783
	Flange body							
	FK14	6	0.6	12	0...20	–	32	20044960
				14	0...25	–	40	20092792
		8	0.8	12	–	0...20	32	20092802
					0...16	–		20044960
				14	0...25	–	40	20078761
	FK17	12	2.4	21	–	0...20	42	20043704
					0...16	–		20092811
				32 2.)	0...20	–		20092812
	Installation in valve block 3.)							
	FC25	16	4.0	32 2.)	0...20	–	42	o. r.

o. r. = on request

1.) Maximum allowable working pressure

2.) Maximum 50 % duty cycle permitted

3.) The FC25 variant is designed for direct integration into a valve block. This results in an improved K_V value of 4.0 m³/h for the orifice DN16. If you are interested, please contact your local Bürkert sales department.

DTS 1000578533 EN Version: L Status: RL (released | freigegeben | valide) printed: 20.05.2026

valvesgo.com

Variant with Kick and Drop coil

Note:

- Please note that the cable plug must be ordered separately, see **"Cable plug Type 2518, form A according to DIN EN 175301-803" on page 20** or separate data sheet **Type 2518** ▶.
- The Kick and Drop coil (AC/DC) features integrated electronics for short-term power increase and decrease in double coil technology.
- Further variants with alternative voltages, NPT or RC internal threads are available on request.

Circuit function	Port connection	Orifice	K_V value water	Coil power		Pressure range (MAWP[1.)])	Coil size	Article no.
				Starting power	Holding power	Ambient temperature + 75 °C		024/DC
		[mm]	[m³/h]	[W]	[W]	[bar]	[mm]	[V/Hz]
Stainless steel body, seal material EPDM/EPDM								
CF A 2/2-way solenoid valve Servo-controlled Normally closed 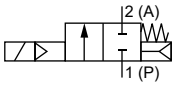 	**Threaded connection with G internal thread**							
	G ¼	6	0.6	20	2	0...25	40	20089275
		8	1.1					20092748
	G ⅜	6	0.6	20	2	0...25	40	20092737
		8	1.1					20092758
	G ½	12	2.2	44	6.5	0...20	42	20079934
	G ¾	16	3.5	44	6.5	0...20	42	20131310
	Cartridge body							
	FC16	6	0.7	20	2	0...25	40	20092770
	FC16	8	1.1	20	2	0...25	40	20092781
	FC17	12	2.3	44	6.5	0...20	42	20067340
	Flange body							
	FK14	6	0.6	20	2	0...25	40	20092796
	FK14	8	0.8	20	2	0...25	40	20083228
	FK17	12	2.4	44	6.5	0...20	42	20092814
	Installation in valve block[2.)]							
	FC25	16	4.0	44	6.5	0...20	42	o. r.

o. r. = on request

1.) Maximum allowable working pressure

2.) The FC25 variant is designed for direct integration into a valve block. This results in an improved K_V value of 4.0 m³/h for the orifice DN16. If you are interested, please contact your local Bürkert sales department.

DTS 1000578533 EN Version: L Status: RL (released | freigegeben | valide) printed: 20.05.2026

valvesgo.com

ATEX/IECEx cable variant

Note:

- The Kick and Drop coil (AC/DC) features integrated electronics for short-term power increase and decrease in double coil technology.
- In the standard variant, the cable length is 3 m. Other lengths are available on request.
- Further variants with alternative voltages, NPT or RC internal threads are available on request.
- ATEX/IECEx variants with terminal box are available on request.

Circuit function	Port connection	Orifice	K_v value water	Coil power		Pressure range (MAWP [1.])	Coil size	Article no.
				Starting power	Holding power	Ambient temperature + 55 °C		024/DC
		[mm]	[m³/h]	[W]	[W]	[bar]	[mm]	[V/Hz]
Stainless steel body, seal material EPDM/EPDM								
CF A 2/2-way solenoid valve Servo-controlled Normally closed 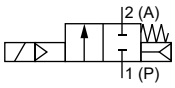	**Threaded connection with G internal thread**							
	G ¼	6	0.6	9	–	0...16	40	20092728
		8	1.1					20092888
	G ⅜	6	0.6	9	–	0...16	40	20092738
		8	1.1					20092889
	G ½	12	2.2	15	–	0...10	42	20083956
				44	6.5	0...20		20087819
	G ¾	16	3.5	15	–	0...10	42	20131310
				44	6.5	0...20		20131314
	Cartridge body							
	FC16	6	0.7	9	–	0...16	40	20092771
	FC16	8	1.1	9	–	0...16	40	20083955
	FC17	12	2.3	15	–	0...10	42	20092784
				44	6.5	0...20		20081150
	Flange body							
	FK14	6	0.6	9	–	0...16	40	20092797
		8	0.8	9	–	0...16		20092807
	FK17	12	2.4	15	–	0...10	42	20092816
				44	6.5	0...20		20084225
	Installation in valve block [2.]							
	FC25	16	4.0	15	–	0...10	42	o. r.
				44	6.5	0...20		o. r.

o. r. = on request

1.) Maximum allowable working pressure

2.) The FC25 variant is designed for direct integration into a valve block. This results in an improved K_v value of 4.0 m³/h for the orifice DN16. If you are interested, please contact your local Bürkert sales department.

DTS 1000578533 EN Version: L Status: RL (released | freigegeben | valide) printed: 20.05.2026

valvesgo.com

8.5. Ordering chart of mobile applications with automotive plug (IP6K9K coil)

Note:

- Power must be reduced to 25 % of the nominal power (holding phase) with the aid of current control or PWM signal after max. 500 ms (switch-on pulse).
- Further variants with alternative voltages, NPT or RC internal threads are available on request.

Circuit function	Port connection	Orifice	K_V value water	Coil power [1.]	Pressure range (MAWP [2.]) Ambient temperature + 85 °C [3.]	Coil size	Article no. 012/DC	Article no. 024/DC
		[mm]	[m³/h]	[W]	[bar]	[mm]	[V/Hz]	[V/Hz]
Stainless steel body, seal material EPDM/EPDM								
CF A 2/2-way solenoid valve Servo-controlled Normally closed 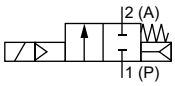	**Threaded connection with G internal thread**							
	G ¼	6	0.6	14	0...25	40	20092730	20028364
		8	1.1	14	0...25		20092882	20092749
	G ⅜	6	0.6	14	0...25	40	20092739	20092740
		8	1.1	14	0...25		20092885	20092886
	G ½	12	2.2	21	0...16	42	20092761	20069635
				32	0...20		20056552	20092762
	G ¾	16	3.5	32	0...20	42	20131316	20131318
	Cartridge body							
	FC16	6	0.6	14	0...25	40	20092772	20028366
		8	1.1	14	0...25		20092890	20069567
	FC17	12	2.3	21	0...16	42	20092785	20092787
		12	2.3	32	0...20		20056554	20092789
	Flange body							
	FK14	6	0.6	14	0...25	40	20092798	20092799
		8	0.8	14	0...25		20092809	20028365
	FK17	12	2.4	21	0...16	42	20092887	20050001
		12	2.4	32	0...20		20092818	20080617
	Installation in valve block [4.]							
	FC25	16	4.0	32	0...20	42	o. r.	o. r.

1.) The stated power represents the required power of the pick-up phase. Power must be reduced by min. 75 % by means of current control or PWM signal after max. 500 ms (switch-on pulse) (holding phase).
2.) Maximum allowable working pressure
3.) Use at this ambient temperature is only guaranteed if power is reduced to 25 % of the nominal power by means of current control or PWM signal after max. 500 ms (switch-on pulse).
4.) The FC25 variant is designed for direct integration into a valve block. This results in an improved K_V value of 4.0 m³/h for the orifice DN16. If you are interested, please contact your local Bürkert sales department.

8.6. Ordering chart accessories

Cable plug Type 2518, form A according to DIN EN 175301 - 803

Note:

- Dimensions in mm
- For further variants see data sheet **Type 2518** ▶.

Cable plug	Dimensions	Variant	Voltage	Article no.
	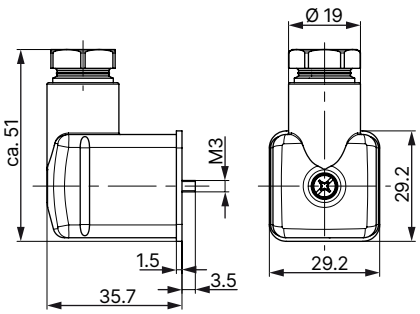	Without wiring (AC/DC)	0...250 V AC/DC	314802
		With LED (AC/DC)	12...24 V AC/DC	314812
		With LED and varistor (AC/DC)	12...24 V AC/DC	314820
		With rectifier, LED and varistor	12...24 V AC/DC	314816
		Without wiring (AC/DC) with silicone seal for higher ambient temperature, e.g. steam variant (NA07)	0...250 V AC/DC	361687

DTS 1000578533 EN Version: L Status: RL (released | freigegeben | valide) printed: 20.05.2026

valvesgo.com

Cable plug Type 2509, form A according to DIN EN 175301 - 803

Note:

- Dimensions in mm
- Without wiring (standard)
- The cable plug Type 2509 meets the requirements of ATEX Cat. 3 GD in assembly with a Bürkert solenoid valve.
- The cable plug Type 2509 meets the requirements of UL Listed (UL 429) in assembly with a Bürkert solenoid valve.
- Refer to data sheet **Type 2509** ▶ for more information about the cable plug.

Cable plug	Dimensions	Variant	Voltage	Article no.
	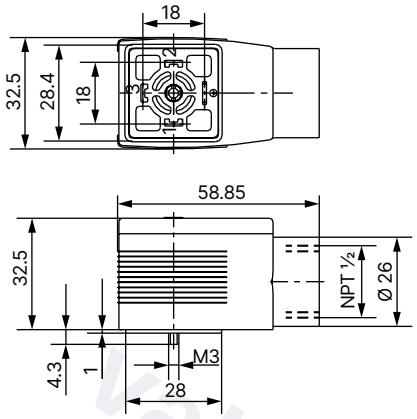	Without wiring	0...250 V AC/DC	137943

Cable glands for ATEX/IECEX terminal box

Note:

- A polyamide cable gland is included in the scope of delivery. A nickel-plated brass variant can be ordered for a surcharge.
- Refer to **"7.1. Cable glands for ATEX/IECEX terminal box" on page 15** for more information about Ex cable glands.
- Refer to **"7.2. Special tool to turn the terminal box" on page 16** for more information about special tool.

Description	Article no.
Ex cable gland, nickel-plated brass, 6...13 mm [1.)]	773278
Ex cable gland, polyamide, 7...13 mm [1.)]	773277
Set SC02-AC10: special tool [2.)] incl. service manual	293488

1.) Cable diameter
2.) Not included in the scope of delivery of the valve

Mounting bracket

Note:

- The mounting bracket, 2 cylinder screws M4×8 and 2 spring lock washers are included in the scope of delivery.
- The mounting bracket can be used for all threaded housings up to orifice DN 12.

Description	Article no.
Mounting bracket for Type 6020/6027/6240/6440 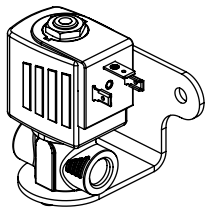	282304

DTS 1000578533 EN Version: L Status: RL (released | freigegeben | valide) printed: 20.05.2026

valvesgo.com