bürkert
FLUID CONTROL SYSTEMS

MAN 1000307592 EN Version: M Status: RL (released | freigegeben) printed: 22.07.2026

Type 6213-6281

2/2-way solenoid valve

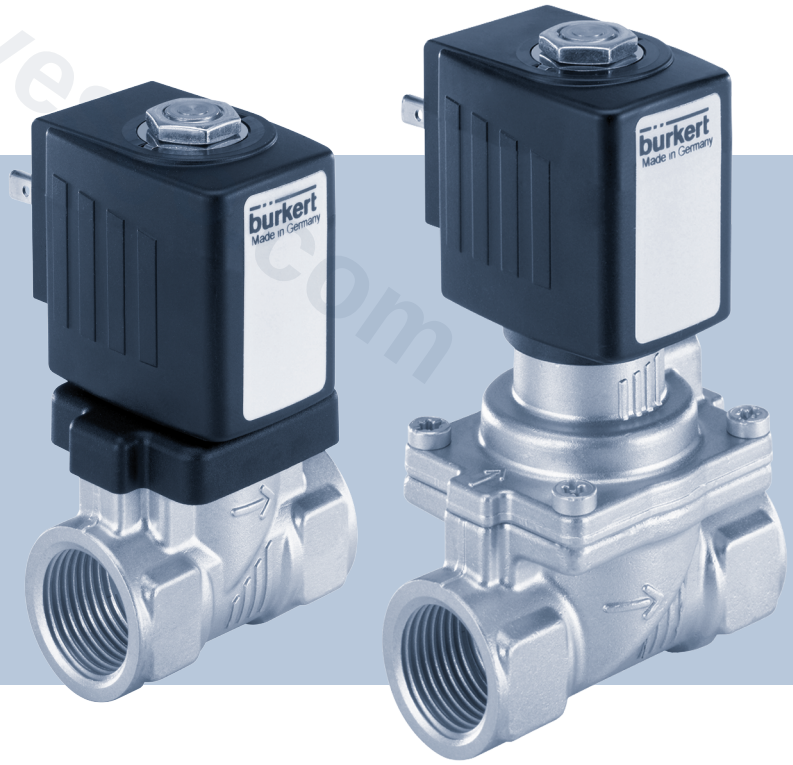

Operating Instructions

valvesgo.com

MAN 1000307592 EN Version: M Status: RL (released | freigegeben) printed: 22.07.2026

valvesgo.com

We reserve the right to make technical changes without notice.
© Bürkert Werke GmbH & Co. KG 2013-2025
Technical documentation 2512/13_GBen_00805875_1011907083_9007200266786315 / Original DE

Table of contents

1	**About this document**	**4**
1.1	Symbols	4
1.2	Terms and abbreviations	5
1.3	Manufacturer	5
2	**Safety**	**6**
2.1	Intended use	6
2.2	Basic safety instructions	6
3	**Technical data**	**8**
3.1	Standards and directives	8
3.2	Operating conditions	8
3.3	Usage conditions	9
3.4	Type label	10
4	**Installation**	**11**
4.1	Safety instructions	11
4.2	Before installation	11
4.3	Installation	11
4.4	Manual override (optional for Type 6281, code HA15/HA17)	12
4.5	Electrical connection of cable plug	12
5	**Maintenance, troubleshooting**	**14**
5.1	Safety instructions	14
5.2	Solenoid installation	14
5.3	Troubleshooting	16
6	**Spare parts**	**17**
6.1	Ordering spare parts	17
7	**Logistics**	**18**
7.1	Transport and storage	18
7.2	Return	18
7.3	Disposal	18

MAN 1000307592 EN Version: M Status: RL (released | freigegeben) printed: 22.07.2026

valvesgo.com

valvesgo.com

1 About this document

The document is an important part of the product and guides the user to safe installation and operation. The information and instructions in this document are binding for the use of the product.

- Before using the product for the first time, read and observe the whole safety chapter.
- Before starting any work on the product, read and observe the respective sections of the document.
- Keep the document available for reference and give it to the next user.
- Contact the Bürkert sales office for any questions.

Further information concerning the product at Products.

- Enter the article number from the type label in the search bar.

The illustrations in these instructions may vary depending on the product variant.

1.1 Symbols

DANGER!

Warns of a danger that leads to death or serious injuries.

WARNING!

Warns of a danger that can lead to death or serious injuries.

CAUTION!

Warns of a danger that can lead to minor injuries.

NOTICE!

Warns of property damage on the product or the installation.

Indicates important additional information, tips and recommendations.

Refers to information in this document or in other documents.

- Indicates a step to be carried out.

✓ Indicates a result.

Menu Indicates a software user-interface text.

MAN 1000307592 EN Version: M Status: RL (released | freigegeben) printed: 22.07.2026

valvesgo.com

1.2 Terms and abbreviations

The terms and abbreviations are used in this document to refer to following definitions.

Product	Solenoid valve Type 6213 EV / 6281 EV

1.3 Manufacturer

Bürkert Fluid Control Systems

Christian-Bürkert-Str. 13–17

74653 Ingelfingen

GERMANY

The contact addresses are available at Contact.

Need more information or additional products?

- Explore the full range of products on our eShop.

valvesgo.com

MAN 1000307592 EN Version: M Status: RL (released | freigegeben) printed: 22.07.2026

valvesgo.com

2 Safety

2.1 Intended use

Improper use of the solenoid valve Types 6213 EV / 6281 EV may be dangerous to people, nearby equipment and the environment.

- The device is designed for controlling, shutting off and dosing neutral media with a viscosity of up to 21 mm2/s.
- With a properly connected and assembled cable plug, e.g. Bürkert Type 2518, the device complies with degree of protection IP65 in accordance with DIN EN 60529/ IEC 60529.
- For use, observe the authorised data, and the operating and usage conditions specified in the contract documents and operating instructions.
- If devices are explosion-protected (see type label or additional plate), also follow the operating instructions for the solenoid/pilot control.
- Prerequisites for safe and trouble-free operation are correct transport, correct storage and installation as well as careful operation and maintenance.
- Only use the device as intended.

2.2 Basic safety instructions

These safety instructions do not take into account any

- unforeseen occurrences or events that may arise during installation, operation or maintenance of the devices.
- local safety regulations that are within the operator's scope of responsibility, including those relating to the installation personnel.

Danger from high pressure

- Before loosening lines and valves, turn off the pressure and vent the lines.

Danger due to electrical voltage

- Before reaching into the device or the system, switch off the power supply and secure it against reactivation.
- Observe the applicable accident prevention and safety regulations for electrical devices.

Risk of burns/fire due to hot device surface if device operated continuously

- Keep the device away from highly flammable substances and media and do not touch with bare hands.

Risk of injury from malfunctioning valves with alternating current (AC)

A seized core will cause the solenoid to overheat, which leads to functional failure.

- Monitor the working process for proper function.

Risk of short circuit/escape of medium due to leaking fittings

- Make sure valve seals are properly seated.

MAN 1000307592 EN Version: M Status: RL (released | freigegeben) printed: 22.07.2026

valvesgo.com

- Carefully screw the valve and pipelines together.

General dangerous situations

- Do not make any internal or external modifications to Types 6213 EV and 6281 EV. Secure the system/device against unintentional activation.
- Installation and maintenance must be performed by authorised technicians using the appropriate tools.
- The process must be restarted in a defined or controlled manner after an interruption in the power supply or fluid supply.
- Do not subject the body/housing to mechanical stress.
- Observe general engineering standards and rules.

MAN 1000307592 EN Version: M Status: RL (released | freigegeben) printed: 22.07.2026

valvesgo.com

3 Technical data

3.1 Standards and directives

This product complies with the legal requirements applicable at the time of placing on the market and has been developed and tested in accordance with the relevant European directives/regulations and harmonized standards. The conformity is documented and, if necessary, supported by evidence. The EU Declaration of Conformity can be found behind the respective type on the home page country.burkert.com

3.2 Operating conditions

The following values are indicated on the type label (see Type label [▸ 10]):

- Voltage (tolerance ± 10%) / current type
- Coil power (active power in W, at operating temperature)
- Pressure range
- Body material
  Brass (MS), stainless steel (VA)
- Seal material
  FKM, EPDM, NBR

Ambient temperature	max. +55°C
Storage temperature	–40...+80 °C
Degree of protection	IP65 in accordance with DIN EN 60529/IEC 60529 with cable plug, e.g. Bürkert Type 2518

A (NC)	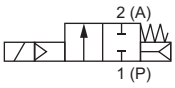	2/2-way valve, normally closed
A (NC)	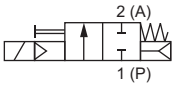	2/2-way valve, normally closed, with manual override
B (NO)	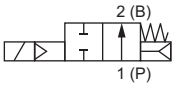	2/2-way valve, normally open

Tab. 1: Circuit function

MAN 1000307592 EN Version: M Status: RL (released | freigegeben) printed: 22.07.2026

valvesgo.com

Special instructions for valves circuit function B (NO) with exhaust port G1/8 on the solenoid (CF05/MX62):

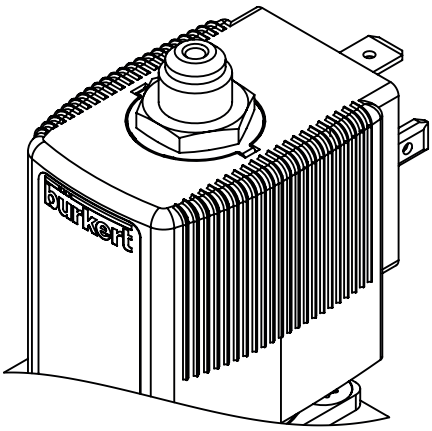

The valve is open when there is no power. The medium also flows out via the exhaust port on the solenoid.

Valves of this type are therefore only suitable for compressor relief.

3.3 Usage conditions

Unless otherwise specified on the type label, the solenoid actuator is suitable for continuous operation

Important information to ensure functional reliability during continuous operation.
During a long downtime, a minimum activity of at least 1–2 switching operations per day is recommended.

Service life: high switching frequency and high pressure will reduce overall service life

Permissible medium temperature depending on solenoid material and seal material

Important note for WWB (NO) devices with alternating current: maximum medium temperature +100°C.

Permissible medium temperatures and ambient temperatures depending on sea material:

Solenoid body PA/EP [1]	Seal material	Medium temperature
Polyamide PA	FKM	0...+90 °C
Epoxy EP (NA38)	FKM	0...+120 °C
Polyamide PA	EPDM	–30...+90 °C
Epoxy EP (NA38)	EPDM	–30...+100 °C
Polyamide PA	NBR	–10...+80 °C

Unless otherwise specified on the type label, the solenoid actuator is suitable for continuous operation.

[1] Label PA or EP under electrical connection

MAN 1000307592 EN Version: M Status: RL (released | freigegeben) printed: 22.07.2026

valvesgo.com

Permissible media depending on the seal material:

Seal material	Permitted media[2)]
FKM	Peroxide solutions, hot oils without additives, diesel and heating oil without additives, washing lye
EPDM	Cold and hot water, oil and fat-free liquids
NBR	Cold and hot water

The following values must also be observed for valves with UL/UR approval:

	Medium temperature	Ambient temperature
Non-hazardous media (air and inert gas)	–30...+120 °C –30...+100 °C (Type 6213 DN40)	–30...+55 °C
Water	–0...+100 °C	0...+55 °C
Fire protection service valve (PE48)	+5...+90 °C	+5...+55 °C

3.4 Type label

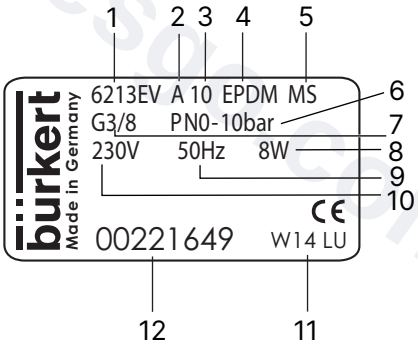

1	Type	2	Circuit function
3	Orifice	4	Sealing material
5	Body material	6	PN
7	Connection type	8	Power
9	Frequency	10	Voltage
11	Manufacture code	12	Article number

2) Gaseous media at low differential pressures (e.g. compressed air and vacuum) can also be switched taking into account (or restricting) a lower tightness. We recommend prior clarification with our sales department about the potential uses

MAN 1000307592 EN Version: M Status: RL (released | freigegeben) printed: 22.07.2026

valvesgo.com

4 Installation

4.1 Safety instructions

DANGER!

Risk of injury from high pressure in the system

- Before loosening lines or valves, switch off the pressure and vent the lines.

DANGER!

Risk of injury from electric shock

- Before reaching into the device or the system, switch off the power supply and secure it against reactivation.
- Observe the applicable accident prevention and safety regulations for electrical devices.

WARNING!

Risk of injury due to improper installation

- Installation must be carried out by authorised technicians only and with the appropriate tools.

WARNING!

Risk of injury from unintentional activation of the system and uncontrolled restart

- Secure the system against unintentional activation.
- Ensure a controlled restart after installation.

valvesgo.com

4.2 Before installation

Installation position: any, preferably with actuator on top.

Approach:

- Clean pipelines of any contamination.
- Install a dirt trap upstream of the valve inlet (≤ 500 µm).

4.3 Installation

NOTICE!

Breaking hazard

- Do not use the solenoid as a lever arm.

- Hold the device on the body using an open-end wrench and screw into the pipeline.
- Observe the flow direction: the arrow on the body indicates the flow direction.

MAN 1000307592 EN Version: M Status: RL (released | freigegeben) printed: 22.07.2026

4.4 Manual override (optional for Type 6281, code HA15/ HA17)

To manually operate the valve, the hand lever must be turned to a vertical position below the solenoid.

Do not over-rotate the hand lever.
When the hand lever is actuated, the valve can no longer be switched electrically.

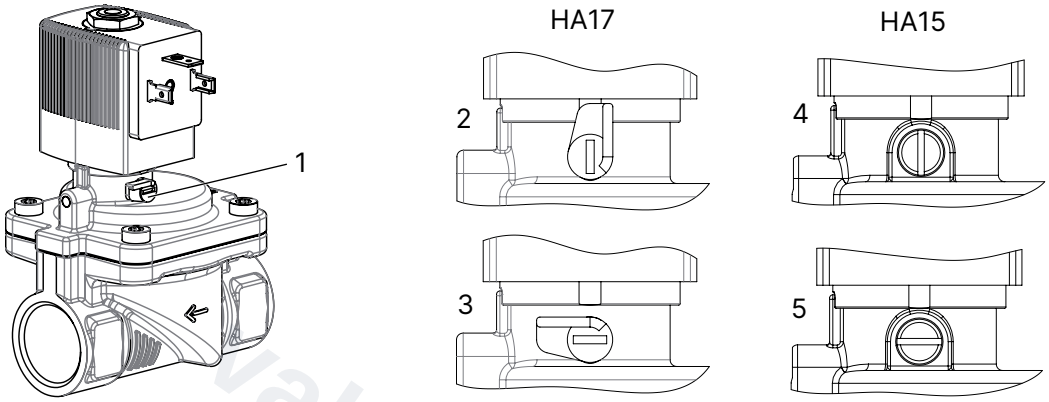

1	Hand lever	2	Open position
3	Closed position	4	Open position
5	Closed position		

4.5 Electrical connection of cable plug

WARNING!

Risk of injury from electric shock

Risk of electric shock if protective conductor not connected.

- Before reaching into the device or the system, switch off the power supply and secure it against reactivation.
- Observe the applicable accident prevention and safety regulations for electrical devices.
- Connect protective conductor and check electrical continuity between solenoid and body.

Approach:

- Screw cable plug tight (for approved types see data sheet), ensuring a maximum torque of 1 Nm.
- Check that the valve seal is correctly seated.
- Connect protective conductor and check electrical continuity between solenoid and body.

Observe the voltage and current type according to the type label.

MAN 1000307592 EN Version: M Status: RL (released | freigegeben) printed: 22.07.2026

valvesgo.com

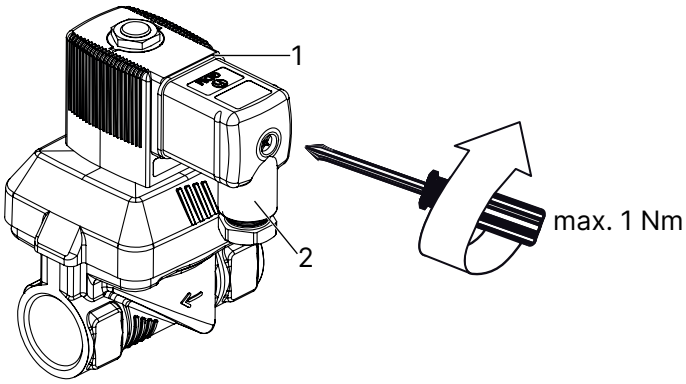

1	Seal	2	Approved cable plug e.g. Type 2518 or other according to DIN ISO 175301-803 Form A

Pulse variant (optional, code CF 16):

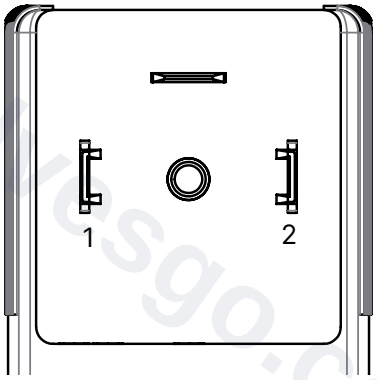

- Valve opens on pulse current min. 50 ms: – to pin 1, + to pin 2
- Valve closes at pulse duration min. 50 ms: + on pin 1, - on pin 2

MAN 1000307592 EN Version: M Status: RL (released | freigegeben) printed: 22.07.2026

valvesgo.com

5 Maintenance, troubleshooting

5.1 Safety instructions

WARNING!

Risk of injury due to improper maintenance work

- Maintenance may be carried out by authorised technicians only and with the appropriate tools.

WARNING!

Risk of injury from unintentional activation of the system and uncontrolled restart

- Secure the system against unintentional activation.
- Ensure a controlled restart after maintenance is completed.

5.2 Solenoid installation

WARNING!

Risk of injury from electric shock

- Before reaching into the device or the system, switch off the power supply and secure it against reactivation.
- When installing, make sure that the solenoid is firmly seated on the housing lid so the protective conductor connection of the solenoid is connected to the valve body.
- Check the protective conductor function after installing the solenoid.

WARNING!

Escaping medium

Medium may leak if a firmly fastened nut is loosened.

- Do not continue to rotate firmly fastened nuts.

WARNING!

Overheating, risk of fire

Connecting the solenoid without a pre-installed valve will cause overheating and destroy the solenoid.

- Only connect the solenoid after the valve has been installed.

Approach:

- Slide solenoid housing onto core guide tube.
- Screw solenoid with nut. Observe tightening torques.

NOTICE!

Device damage due to incorrect tool

- Always tighten nut with an open-end wrench. Using other tools may damage the device.

MAN 1000307592 EN Version: M Status: RL (released | freigegeben) printed: 22.07.2026

valvesgo.com

- Check protective conductor.

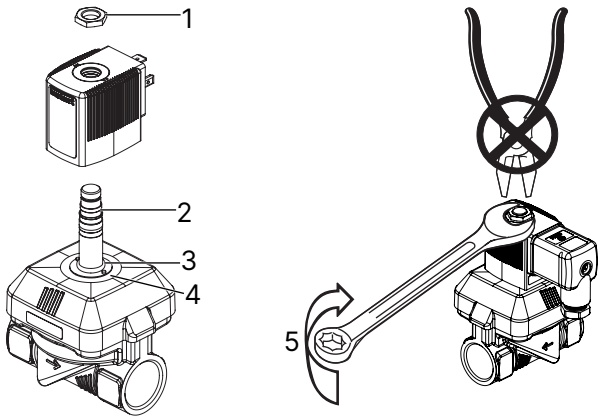

1	Nut	2	Core guide tube
3	O-Ring	4	Anti-twist device
5	Observe tightening torques for fixing nut		

Solenoid type	Solenoid width	Tightening torque
AC10	32 mm or 40 mm	5 Nm
AC19	42 mm	10 Nm

Tab. 2: Tightening torques for fixing nut

MAN 1000307592 EN Version: M Status: RL (released | freigegeben) printed: 22.07.2026

valvesgo.com

valvesgo.com

5.3 Troubleshooting

If faults occur, check whether

- the device is installed according to regulations and the electrical and fluid connections are properly executed,
- the device is not damaged,
- all screws have been tightened,
- voltage and pressure have been applied,
- and the pipelines are clean.

Valve does not actuate

Possible cause:
Short circuit or solenoid interrupted.

- Core or core area contaminated.
- Operating pressure outside the permitted pressure range.

Valve does not close

Possible cause:
Interior of the valve contaminated.

- Small control bore in diaphragm blocked.
- Valve opened by manual override.

valvesgo.com

MAN 1000307592 EN Version: M Status: RL (released | freigegeben) printed: 22.07.2026

6 Spare parts

CAUTION!

Risk of injury and/or damage to property due to incorrect parts

Incorrect accessories and unsuitable spare parts may cause injuries and damage the device and the surrounding area.

- Use only original accessories and original spare parts from Bürkert.

6.1 Ordering spare parts

Spare part sets

Order spare part sets by specifying sets SET 1, SET 3 or SET 7 and the identification number of the device.

Depending on the variant of the valves, the composition of the spare part sets may differ from the illustration.

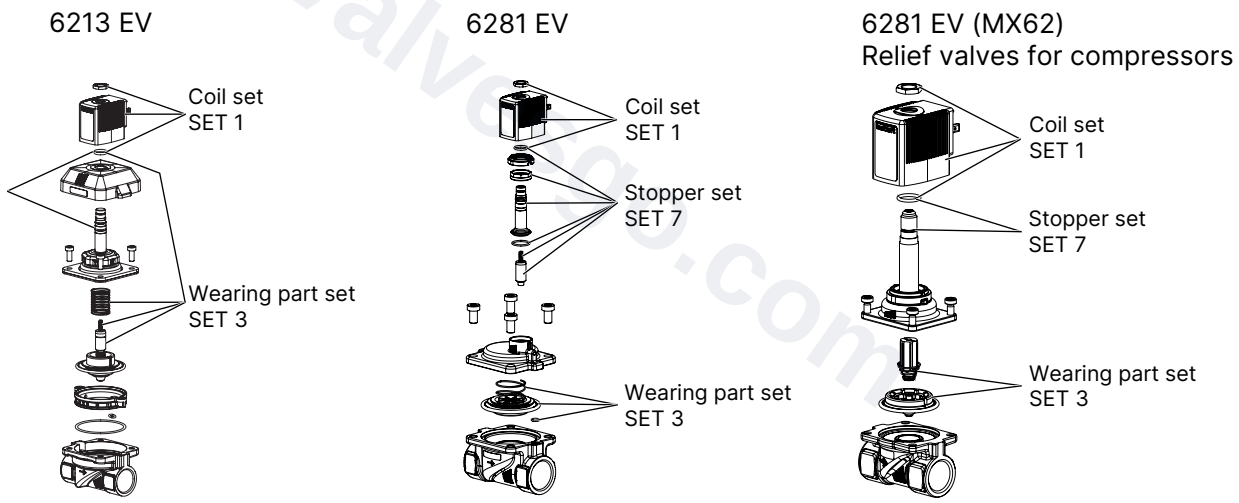

Fig. 1: Overview spare parts

MAN 1000307592 EN Version: M Status: RL (released | freigegeben) printed: 22.07.2026

valvesgo.com

7 Logistics

7.1 Transport and storage

- Protect the device against moisture and dirt in the original packaging during transportation and storage.
- Avoid UV radiation and direct sunlight.
- Protect connections, if present, from damage with protective caps.
- Observe the permitted storage temperature.

7.2 Return

No work or tests will be carried out on the device until a valid Contamination Declaration has been received.

- To return a used device to Bürkert, contact the Bürkert sales office. A return number is required.

7.3 Disposal

Environmentally friendly disposal

- Follow national regulations regarding disposal and the environment.
- Collect electrical and electronic devices separately and dispose of them as special waste.

Further information at country.burkert.com

MAN 1000307592 EN Version: M Status: RL (released | freigegeben) printed: 22.07.2026

valvesgo.com