bürkert
FLUID CONTROL SYSTEMS

Electromotive 2-way proportional valve

- Actuator is not wetted
- Excellent setting range and fast reaction time
- Connection orifice DN 15
- Medium temperature up to + 130 °C
- Variants: positioner, process controller

Product variants described in the data sheet may differ from the product presentation and description.

Can be combined with

Type ME61
EDIP process display

Type ME43
Fieldbus gateway

Type 8098
FLOWave SAW flowmeter

Type 8008
Flowmeter for gases

Type 8325
Pressure transmitter for general applications, 0...25 bar

Type description

The direct-acting motor valve Type 3281 is particularly suitable for dosing liquids and gases in closed or open control loops. The valve is driven by a linear stepper motor. The integrated electronics assembly simplifies the process integration; additional actuation modules are not necessary. The engine does not need any energy to maintain a certain valve opening. This feature can reduce the energy consumption of a plant dramatically and therefore make it more efficient. Type 3281 is available as a variant with integrated positioner, as well as a variant with integrated process controller.

valvesgo.com

DTS 1000551383 EN Version: - Status: RL (released | freigegeben | valide) printed: 07.10.2026

© Christian Bürkert GmbH & Co. KG, Subject to alteration

valvesgo.com

Table of contents

1. General technical data 3

1.1. General 3
1.2. Electrical control and interfaces 4

2. Approvals and conformities 4

2.1. General notes 4
2.2. Conformity 4
2.3. Standards 4
2.4. Foods and beverages/Hygiene 5

3. Materials 5

3.1. Bürkert resistApp 5
3.2. Material specifications 6

4. Dimensions 7

4.1. Actuator 7
Globe variant 7
Angle seat variant 8
4.2. Threaded variant 9
4.3. Threaded variant angle seat 10
4.4. 2/2-way module body 11
4.5. Welded variant 12
4.6. Capacitive buffer module 13

5. Product connections 14

5.1. Electrical connection 14
Pin assignment analogue 14
Pin assignment digital (fieldbus) 14

6. Performance specifications 15

6.1. Duty cycle derating diagram 15
6.2. Pressure range 15
Standard variant 15
6.3. Flow characteristic 16
Determination of the K_V value 16
Exemplary characteristic curve of the motor valve 16

7. Product operation 17

8. Product accessories 18

8.1. Accessories capacitive buffer module 18
8.2. Bürkert Communicator Software 18
8.3. Connection Type 3282 with Bürkert Communicator software 19

9. Ordering information 19

9.1. Bürkert eShop 19
9.2. Recommendation regarding product selection 19
9.3. Bürkert product filter 19
9.4. Bürkert Product Enquiry Form 20
9.5. Ordering chart accessories 20
Standard accessories 20
Accessories cable 20
Bürkert accessories 20

DTS 1000551383 EN Version: - Status: RL (released | freigegeben | valide) printed: 07.10.2026

valvesgo.com

1. General technical data

1.1. General

Product properties	
Dimensions	Further information can be found in chapter "4. Dimensions" on page 7.
Material	
Further information can be found in chapter "3.2. Material specifications" on page 6.	
Seal	PTFE
Valve body	Stainless steel
Flow direction	Against closing direction (below seat)
Design	• Globe: on/off valve or control valve • Angle seat: on/off valve or control valve
Weight	~1.1 kg
Orifice	DN 15, NPS ½
Controller variant	On/off valve or position controller or process controller
Safety setting in case of power failure	With capacitive buffer module as accessory, see chapter "4.6. Capacitive buffer module" on page 13.
Status indicator	LED (Refer to the **operating instructions Type 3281** ▶ for more information.)
Performance data	
Typical values of positioning behaviour [1.)]	
Dead band of the position control	± 0.5 % (corresponds to setting range 1:100)
Closing time	2.5 s
Operating pressure	0...16 bar(g) (depending on seat size, see chapter "6.2. Pressure range" on page 15) Vacuum variant up to -0.9 bar(g) (optional)
Duty cycle	Up to 100 % (depending on medium and ambient temperature)
K_{VS} value	0.57...4.55 m³/h (see chapter "6.2. Pressure range" on page 15)
Nominal pressure	PN 25 (DIN EN 1333)
Seat leakage (DIN EN 60534 - 4)	Class VI
Electrical data	
Operating voltage	24 V DC ± 10 % (max. residual ripple 10 %)
Power consumption	< 1 W holding power Max. 12 W (short term 20 W)
Medium data	
Operating medium	Neutral gases and liquids
Medium temperature	- 20 °C...+ 130 °C
Viscosity	Max. 600 mm²/s (cSt)
Product connections	
Port connection [2.)]	• Threaded connection – G (EN ISO 228 - 1) – RC (EN ISO 228 - 1, ISO 7 - 1 / DIN EN 10226 - 2) – NPT (ASME B 1.20.1) • Welded connection – DIN EN ISO 1127/ISO 4200/DIN 11866 B – DIN 11850 2/DIN 11866 A/DIN EN 10357 A
Communication and control	
Standard signal (analogue)	Set-point value: 0/4...20 mA, 0...5/10 V and digital input, see chapter "1.2. Electrical control and interfaces" on page 4.
Fieldbus (digital)	• Bürkert system bus (büS) • CANopen (optional)
EDIP	Field device for integration into the EDIP platform via Bürkert system bus (büS) Further information can be found in chapter "8.2. Bürkert Communicator Software" on page 18.
Approvals and conformities	
Degree of protection	IP54
Foods and beverages/Hygiene	Further information can be found in chapter "2.4. Foods and beverages/Hygiene" on page 5.

DTS 1000551383 EN Version: - Status: RL (released | freigegeben | valide) printed: 07.10.2026

valvesgo.com

Environment and installation	
Installation position	As required, preferably with actuator upright
Ambient temperature	-10 °C...+60 °C (Derating see chapter "6.1. Duty cycle derating diagram" on page 15)

1.) The characteristic values of the control behaviour depend on the operating conditions.
2.) Others on request

1.2. Electrical control and interfaces

Technical data	Device variants			
	Positioner (C)		Process controller (D)	
	Analogue	Digital (fieldbus)	Analogue	Digital (fieldbus)
Electrical connection	M12 plug, A-coded, 8-pin	M12 plug, A-coded, 5-pin	M12 plug, A-coded, 8-pin and M12 socket, A-coded, 5-pin	M12 plug, A-coded, 5-pin and M12 socket, A-coded, 5-pin
Input signal (set-point value)	4...20 mA, 0...20 mA, 0...10 V [1.)] or 0...5 V PWM (800 Hz, 24 V, min: 10 V, max: 30 V)	–	4...20 mA, 0...20 mA, 0...10 V or 0...5 V PWM (800 Hz, 24 V, min: 10 V, max: 30 V)	–
Input signal (actual value of ext. sensor)	–	–	4...20 mA, 0...20 mA, 0...10 V or 0...5 V	4...20 mA, 0...20 mA, 0...10 V, 0...5 V or frequency (5...2.000 Hz)
Input impedance for analogue input	60 Ω (Current), 22 kΩ (Voltage)	–	60 Ω (current), 22 kΩ (voltage)	60 Ω (current), 22 kΩ (voltage)
Output signal (actual value)	0/4...20 mA (max. Load: 560 Ω), 0...5/10 V (max. Current: 10 mA)	–	0/4...20 mA (max. load: 560 Ω), 0...5/10 V (max. current: 10 mA)	–
Fieldbus interface	–	büS/CANopen	–	büS/CANopen
Parameterisation tool	Bürkert Communicator (connection via büS stick)	Bürkert Communicator (connection via büS stick)	Bürkert Communicator (connection via büS stick)	Bürkert Communicator (connection via büS stick)

1) For an on/off function, the input signal is: 0 V (log. 0, valve closed) or 10...30 V (log. 1, valve open)

2. Approvals and conformities

2.1. General notes

- The approvals and conformities listed below must be stated when making enquiries. This is the only way to ensure that the product complies with all required specifications.
- Not all available variants can be supplied with the below mentioned approvals or conformities.

2.2. Conformity

In accordance with the Declaration of conformity, the product is compliant with the EU Directives.

2.3. Standards

The applied standards which are used to demonstrate compliance with the EU Directives are listed in the EU-Type Examination Certificate and/or the EU Declaration of Conformity.

DTS 1000551383 EN Version: - Status: RL (released | freigegeben | valide) printed: 07.10.2026

valvesgo.com

2.4. Foods and beverages/Hygiene

Conformity	Description
	EC Regulation 1935/2004 of the European Parliament and of the Council All wetted materials are compliant with EC Regulation 1935/2004/EC according to the manufacturer's declaration.
	China food GB Standards of the People's Republic of China (valid for the variable code PL10) All wetted materials are compliant with the requirement of China food GB Standards according to the manufacturer's declaration.

3. Materials

3.1. Bürkert resistApp

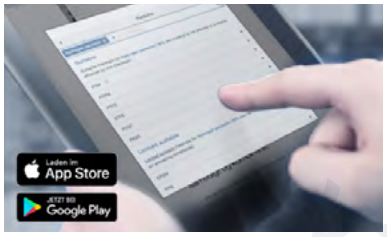

Bürkert resistApp – Chemical resistance chart

You want to ensure the reliability and durability of the materials in your individual application case? Verify your combination of media and materials on our website or in our resistApp.

Start chemical resistance check

DTS 1000551383 EN Version: - Status: RL (released | freigegeben | valide) printed: 07.10.2026

valvesgo.com

valvesgo.com

3.2. Material specifications

Note:
The proportional valve Type 3281 is supplied with various port connections. These connections are not shown completely. However, they correspond to the material of the valve housing.

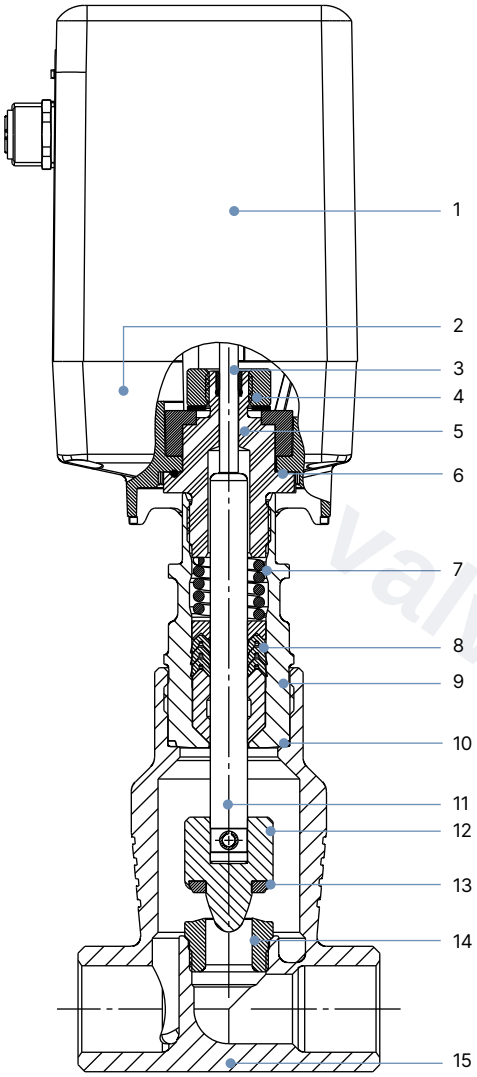

Actuator

No.	Element	Material
1	Housing cover	PC (Polycarbonate)
2	Housing base	PPS (Polyphenylenesulfide)

Valve body

Nr.	Element	Material
3	Spindle guide	High-performance polymer
4	Sliding washers	High-performance polymer
5	Guide piece	Stainless steel 1.4305
6	O-ring	NBR
7	Compression spring	Stainless steel
8	Spindle seal	PTFE (filled)/FKM, with spring compensation
9	Pipe	Stainless steel 1.4404
10	Body seal	Graphite
11	Spindle	Stainless steel 1.4401
12	Control cone/swivel plate	Stainless steel 1.4571
13	Seat seal	PTFE sealing washer
14	Valve seat	Stainless steel 1.4571
15	Valve body	Stainless steel CF3M/316L

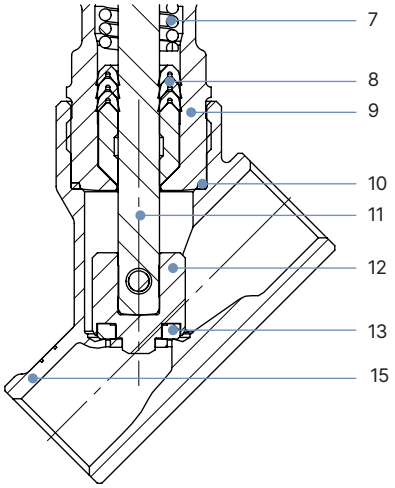

Nr.	Element	Werkstoff
7	Compression spring	Stainless steel
8	Spindle seal	PTFE (filled)/FKM, with spring compensation
9	Pipe	Stainless steel 1.4404
10	Body seal	Graphite
11	Spindle	Stainless steel 1.4401
12	Control cone/swivel plate	Stainless steel 1.4571
13	Seat seal	PTFE sealing washer
15	Valve body	Stainless steel CF3M/316L

DTS 1000551383 EN Version: - Status: RL (released | freigegeben | valide) printed: 07.10.2026

valvesgo.com

4. Dimensions

4.1. Actuator

Globe variant

Note:

- Dimensions in mm
- Twisting of the actuator housing is possible, see **operating Instructions Type 3281** ▶.

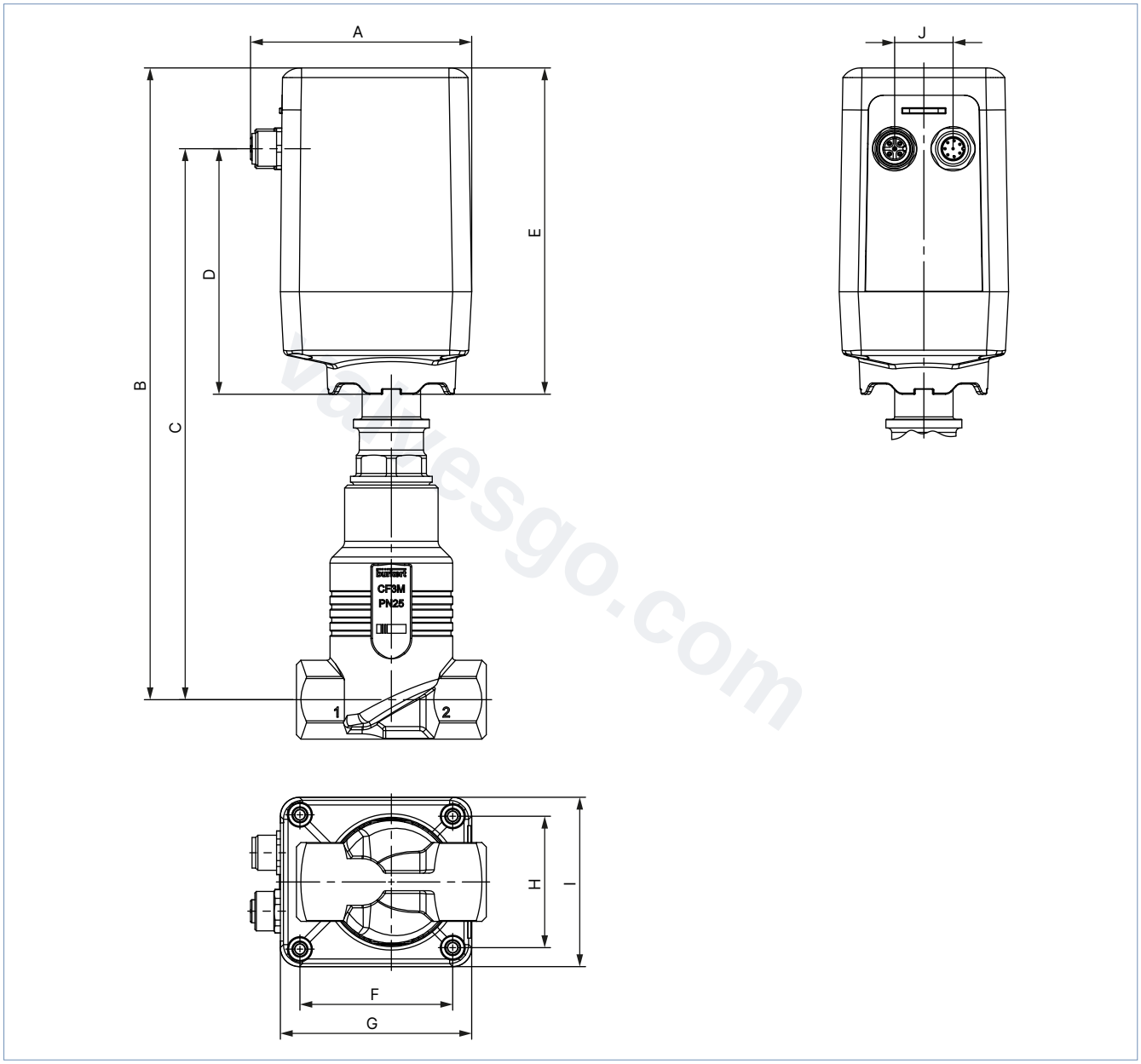

A	B	C	D	E	F	G	H	I	J
76	216	188	84	112	52	66	45	58	20

DTS 1000551383 EN Version: - Status: RL (released | freigegeben | valide) printed: 07.10.2026

valvesgo.com

Angle seat variant

Note:
Dimensions in mm

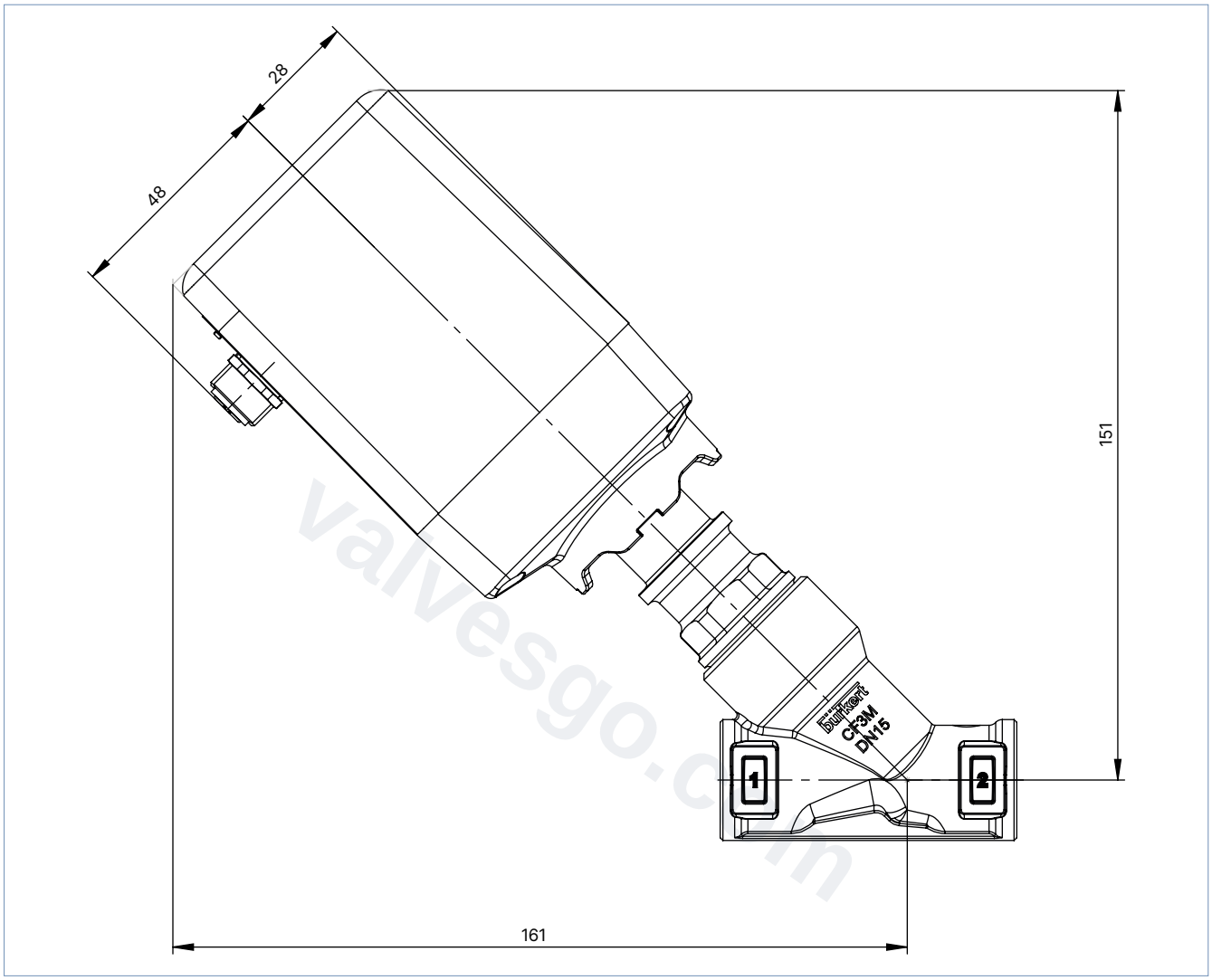

DTS 1000551383 EN Version: - Status: RL (released | freigegeben | valide) printed: 07.10.2026

valvesgo.com

4.2. Threaded variant

Note:
Dimensions in mm

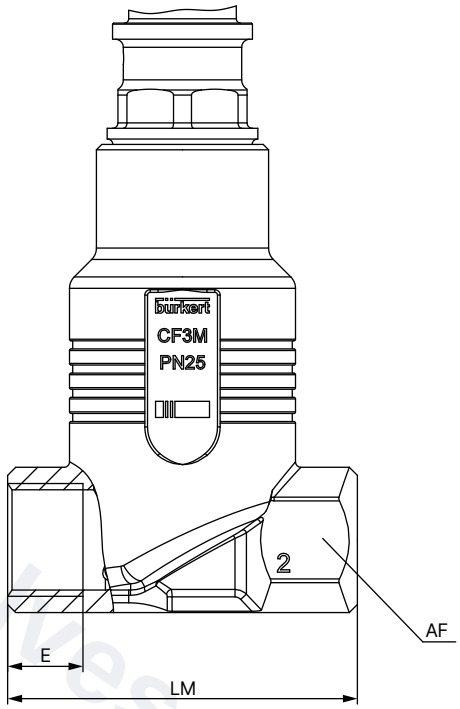

Orifice (port connection)		G (DIN ISO 228 - 1) NPT (ASME B1.20.1) RC (ISO 7 - 1)				
		E			LM	AF
DN	NPS	G	NPT	RC		
15	½	14	13.7	13.2	65	27

DTS 1000551383 EN Version: - Status: RL (released | freigegeben | valide) printed: 07.10.2026

valvesgo.com

4.3. Threaded variant angle seat

Note:
Dimensions in mm

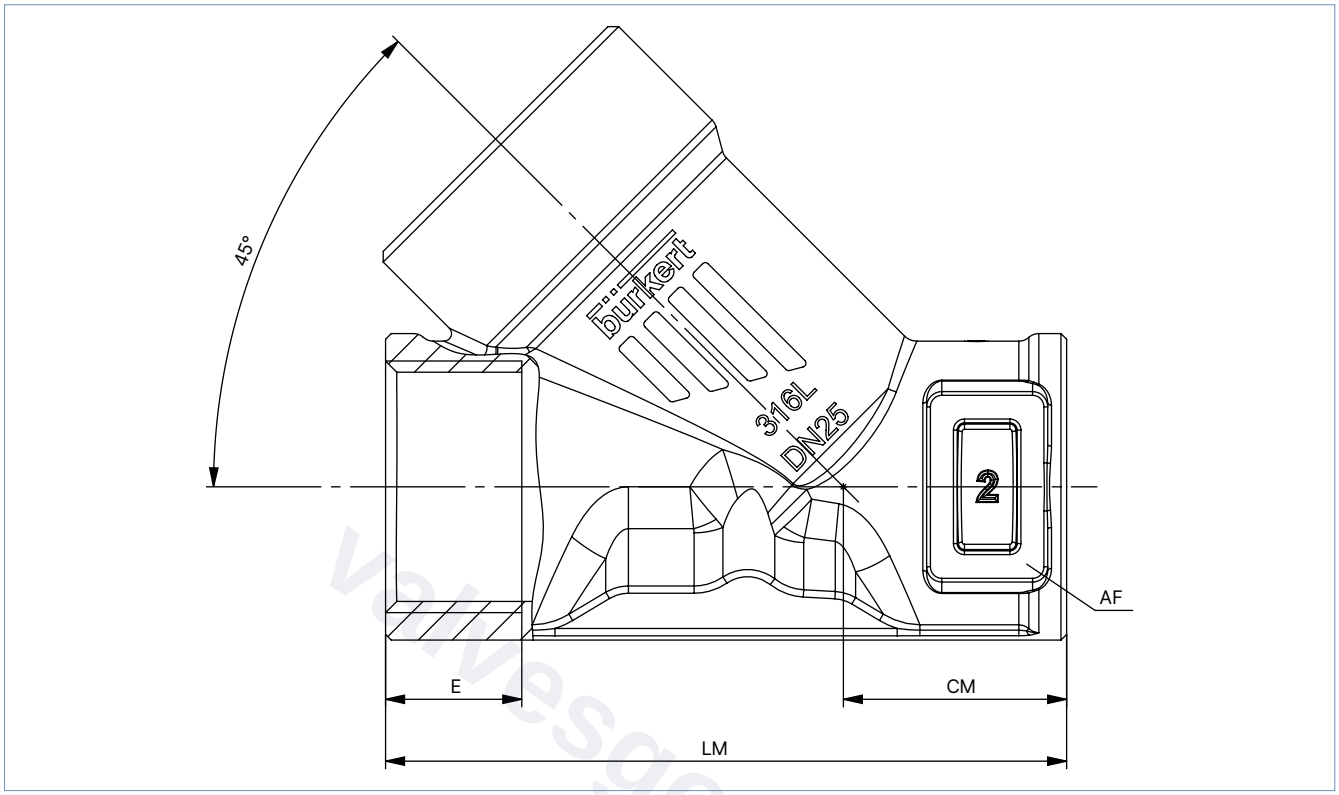

Orifice (port connection)		G (DIN ISO 228 - 1) NPT (ASME B1.20.1) RC (ISO 7 - 1)					
		E			CM	LM	AF
DN	NPS	G	NPT	RC			
15	½	14	13.7	13.2	24	65	27

DTS 1000551383 EN Version: - Status: RL (released | freigegeben | valide) printed: 07.10.2026

valvesgo.com

4.4. 2/2-way module body

Note:

- Dimensions in mm
- Connection 3 or 4 can be blanked

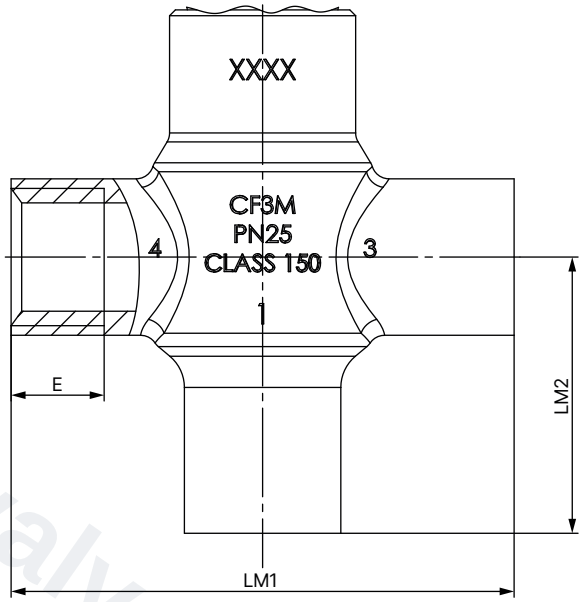

Orifice (port connection)		G (DIN ISO 228 - 1)		
		E	LM1	LM2
DN	NPS	G		
15	½	16	86.5	47.5

DTS 1000551383 EN Version: - Status: RL (released | freigegeben | valide) printed: 07.10.2026

valvesgo.com

4.5. Welded variant

Note:
Dimensions in mm

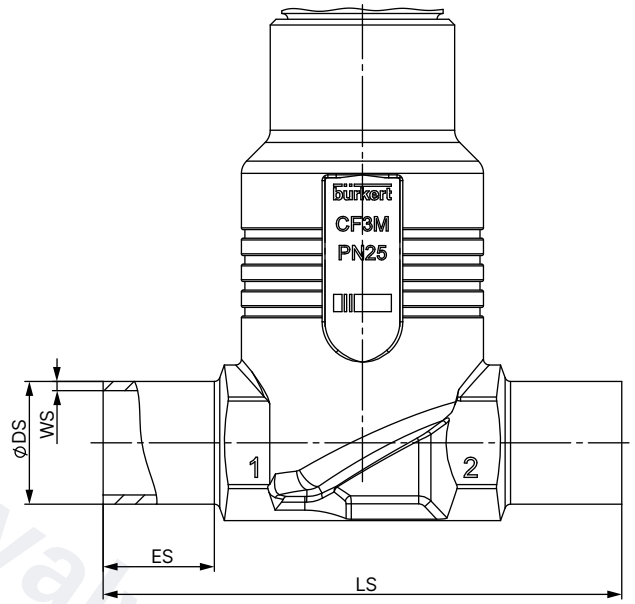

Orifice (port connection)	ES	LS	EN ISO 1127 1/ISO 4200/ DIN 11866 B		DIN 11850 2/DIN 11866 A/ DIN EN 10357 A	
DN			ØDS	WS	ØDS	WS
15	20	90	21.3	1.6	19	1.5

DTS 1000551383 EN Version: - Status: RL (released | freigegeben | valide) printed: 07.10.2026

valvesgo.com

4.6. Capacitive buffer module

Note:

- Dimensions in mm
- Further information can be found in chapter “8.1. Accessories capacitive buffer module” on page 18.

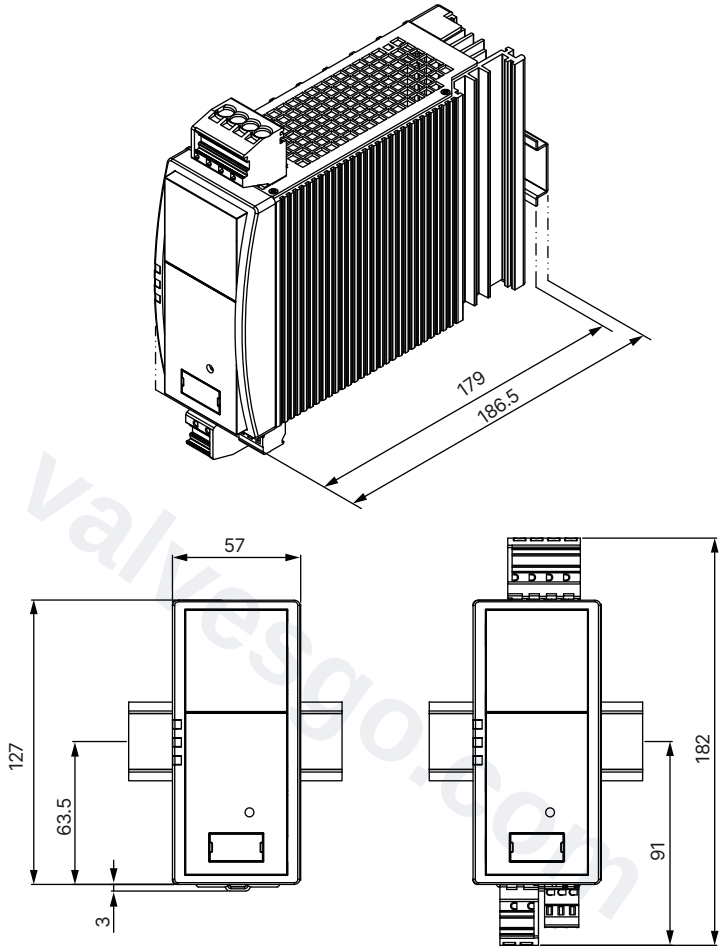

DTS 1000551383 EN Version: - Status: RL (released | freigegeben | valide) printed: 07.10.2026

valvesgo.com

5. Product connections

5.1. Electrical connection

Pin assignment analogue

Note:
For parameterisation and configuration of the positioner and the process controller variants, please use the Bürkert Communicator software tool, see "8.2. Bürkert Communicator Software" on page 18.

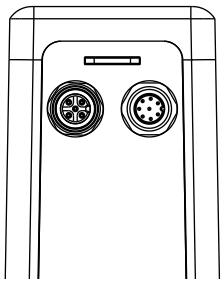

Circular plug M12, 8-pin	Pin	Configuration
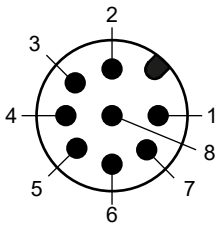	1	24 V DC
	2	Power supply GND
	3	Internal use [1.)]
	4	Internal use [1.)]
	5	Internal use [1.)]
	6	Signal input +
	7	Signal output
	8	Signal GND

Only for positioners and process controllers variant, for connection of the parameterisation tools: Bürkert Communicator. The connection is via the büS-Stick. Using an adapter cable (M12 8-pin to M12 5-pin) the büS-Stick can be connected (see "9.5. Ordering chart accessories" on page 20).

Additional for process controller variant:

Socket M12, 5-pin	Pin	Configuration
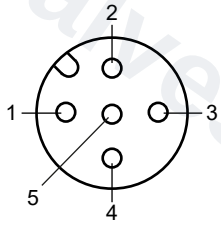	1	24 V DC sensor power supply
	2	Analogue I_N (0...20 mA, 4...20 mA, 0...5 V or 0...10 V)
	3	GND
	4	GND (bridge to GND pin 3)
	5	Not connected

Pin assignment digital (fieldbus)

Note:
For parameterisation and configuration of the positioner and the process controller variants, please use the Bürkert Communicator software tool, see "8.2. Bürkert Communicator Software" on page 18.

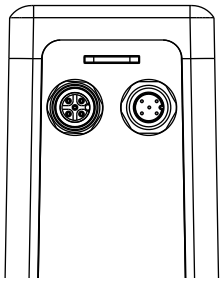

Circular plug M12, 5-pin	Pin	Configuration
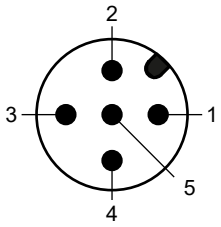	1	Shielding
	2	24 V DC
	3	GND
	4	CAN_H
	5	CAN_L

Additional for process controller variant:

Socket M12, 5-pin	Pin	Configuration
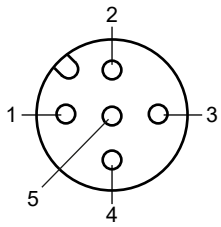	1	24 V DC sensor power supply
	2	Analogue I_N (0...20 mA, 4...20 mA, 0...5 V, 0...10 V or frequency)
	3	GND
	4	GND (bridge to GND pin 3)
	5	Not connected

DTS 1000551383 EN Version: - Status: RL (released | freigegeben | valide) printed: 07.10.2026

valvesgo.com

6. Performance specifications

6.1. Duty cycle derating diagram

Note:

- The duty cycle is an important factor for motor valves. The self-heating of the engine limits the maximum duty cycle. High ambient temperatures additionally increase the risk of damage due to overheating. The following diagram shows the recommended maximum duty cycle as a function of the ambient temperature. In energy-saving mode (lower driving force), higher duty cycles are possible. The motor is optimised for the valve function in terms of size, power consumption and costs.
- The duty cycle does not mean the duty cycle of the device but the duty cycle of the motor. This is only switched on when the valve is to move. Frequent set-point value changes drastically increase the duty cycle of the motor.
- Operating the valve outside the recommended duty cycle limits will result in a significantly reduced service life of the valve.

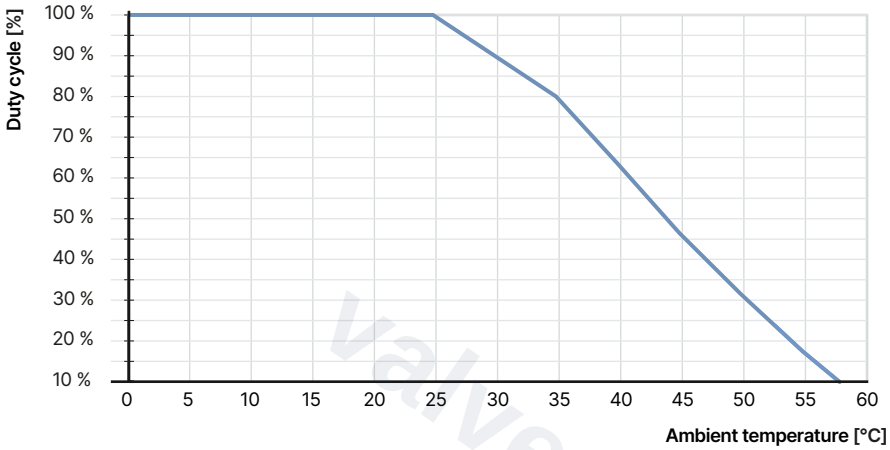

Derating curve for max. medium temperature (+ 130 °C)

6.2. Pressure range

Standard variant

Note:
For orders from our standard product range, use the product filter in our eShop (see "9.1. Bürkert eShop" on page 19).

Alternatively, you can use the Product Enquiry Form (see "9.4. Bürkert Product Enquiry Form" on page 20) for information about the device layout and send it to us after completion.

Valve function	Seat size		Controller variant	Port connection	K_{VS} value [m³/h] 1.)	Pressure range [bar(g)]
Control valve, without safety position in case of power failure	Globe	4	Control	G ½	0.57	0...16
		6	Control	G ½	1.25	0...16
		8	Control	G ½	1.8	0...12
		10	Control	G ½	2.25	0...7
		15	On/off	G ½	4.45	0...3.5
	Angle-seat	15	Control	G ½	3.6	0...3
		15	On/off	G ½	4.55	0...3.5

1.) Flow value for water, measurement at + 20 °C, 1 bar pressure difference above the fully open valve

Further variants on request

Pressure
Vacuum variant:
This variant is suitable up to - 0.9 bar(g) (optional)

DTS 1000551383 EN Version: - Status: RL (released | freigegeben | valide) printed: 07.10.2026

valvesgo.com

6.3. Flow characteristic

Determination of the K_V value

Note:
Once the K_V-value required for the application has been calculated, it can be compared with the K_{VS}-values from the ordering chart. The K_{VS}-value must be higher than the K_V-value of the application, but should be neither too high nor too close to it - as a recommendation: 10 % higher.

Pressure drop	K_V value for liquids [m³/h]	K_V value for gases [m³/h]
Sub-critical $p_2 > \frac{p_1}{2}$	$= Q\sqrt{\frac{\rho}{1000\,\Delta p}}$	$= \frac{Q_N}{514}\sqrt{\frac{T_1\,\rho_N}{p_2\,\Delta p}}$
Supercritical $p_2 < \frac{p_1}{2}$	$= Q\sqrt{\frac{\rho}{1000\,\Delta p}}$	$= \frac{Q_N}{257\,p_1}\sqrt{T_1\,\rho_N}$

Value	Description	Unit
K_V	Flow coefficient	[m³/h] 1.)
Q_N	Standard flow rate	[m_N^3/h] 2.)
p_1	Inlet pressure	[bar] 3.)
p_2	Outlet pressure	[bar] 3.)
Δp	Differential pressure p_1...p_2	[bar]
ρ	Density	[kg/m³]
ρ_N	Standard density	[kg/m³]
T_1	Medium temperature	[(273+t)K]

1.) Measured for water, Δp = 1 bar, over the value
2.) At reference conditions 1.013 bar and 0 °C (273 K)
3.) Absolute pressure

Exemplary characteristic curve of the motor valve

Note:
The dimensioning of the seat size is very important for electromotive proportional valves to function properly within the application. The seat size must be selected so that, on the one hand, the desired flow range is achieved and, on the other hand, when the valve is fully open, a sufficient portion of the total pressure drop occurs across the valve.

Reference value: Δp_{valve} > 25 % of the total pressure drop

Otherwise, an ideal, linear valve characteristic is deformed into a curved system characteristic.

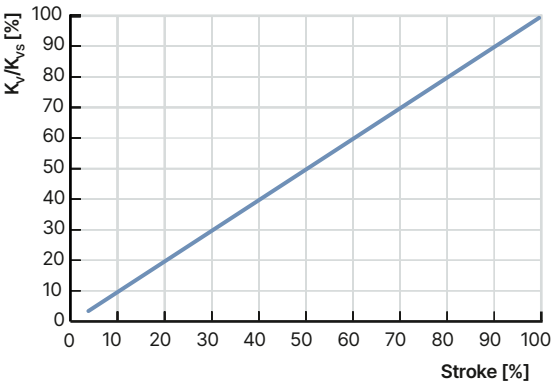

Linear flow characteristic - the K_{VS} values of the respective seat sizes can be found in chapter "6.2. Pressure range" on page 15.

DTS 1000551383 EN Version: - Status: RL (released | freigegeben | valide) printed: 07.10.2026

valvesgo.com

7. Product operation

Process diagram	Description
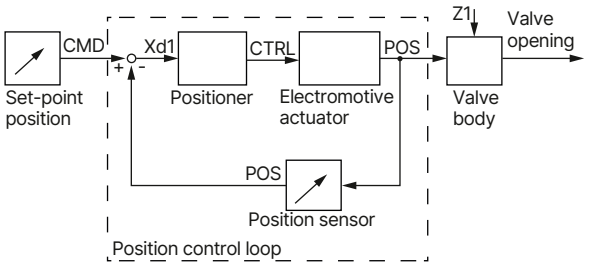	**Positioner variant** The proportional valve in the position control variant converts an external standard signal, the position set-point value, into a valve position. The position of the actuator is controlled according to the set-point position. The position sensor records the current position (POS) of the electromotive valve. This actual position is compared by the positioner with the set-point value (CMD) specified as the standard signal. If there is a control difference (Xd1), a motor control signal is given to the actuator as the actuating variable. Z1 is a disturbance value. The two end positions of the valve are indicated by the LED status. In addition, the actual position recorded by the position sensor is output via the M12 circular plug-in connector.
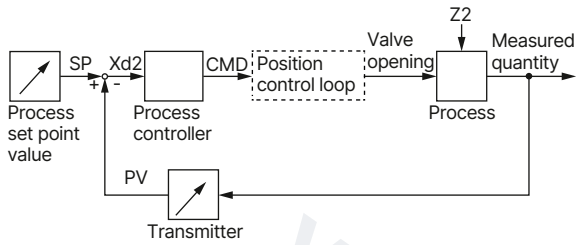	**Process controller variant** The additionally implemented PID controller can perform not only the actual position control but also a process control in the sense of a cascade control. The process controller is integrated into a control loop. The position setpoint of the valve is calculated from the process setpoint and the actual process value via the control parameters (PID controller). The process setpoint can be specified by an external signal. During the process control the position control mentioned above becomes the subordinate auxiliary control circuit; this results in a cascade control. The process controller in the main control circuit has a PID function. The process set-point value (SP) is specified as a set-point value and is compared with the actual value (PV) of the process variable to be controlled. The position measuring system records the current position (POS) of the electromotive linear actuator. This position actual value is compared by the position controller with the set-point value (CMD) specified by the process controller. If there is a control difference (Xd2), the actual position (POS) and therefore the valve opening are changed by the control variable (CTRL). Z2 represents a disturbance variable.

DTS 1000551383 EN Version: - Status: RL (released | freigegeben | valide) printed: 07.10.2026

valvesgo.com

8. Product accessories

8.1. Accessories capacitive buffer module

Note:

- See "4.6. Capacitive buffer module" on page 13 for information about dimensions.
- See "Standard accessories" on page 20 for ordering information.

Accessories	Description
Motor valve(s) connection 24 V DC power supply For example: Single phase, primary switched mode power supply Type 1573	• Capacitive buffer module for moving to a safety position in case of power failure • In order to be able to move to a safety position of the valve in the event of a power failure, the valve must be supplied with voltage via the capacitive buffer module. In the event of a power failure, the buffer module provides an output voltage of 18 V DC for a few seconds. The reduced input voltage is detected by the valve and the safety position is approached accordingly. Up to 3 valves of Type 3280 or 2 valves of Type 3281 and Type 3285 can be connected to a buffer module. Factory setting of the safety position: "valve closed" • For standard variant (functionality available from software version A.08): Adjustable via DIP switch (when the effective direction is reversed, the safety position changes to "valve open") • For positioner and process controller variant (functionality available from software version A.06): Adjustable via Bürkert Communicator (user-defined safety position)

8.2. Bürkert Communicator Software

Note:

- An adjustment of the valve by the Bürkert Communicator is only possible with the positioner or process controller variants.
- The associated communication software can be downloaded under **Type 8920** ▶.

The Bürkert Communicator is the most important software tool of the device platform EDIP (Efficient Device Integration Platform). The extensive features of this universal tool facilitate the configuration and parameterisation of all devices equipped with the digital CANopen-based interface.
The Bürkert Communicator provides the user with a complete overview of all cyclic process values and acyclic diagnostic data. The integrated graphical programming environment enables the creation of control functions for decentralised sub-systems. The connection to the PC can be established via a USB-büS interface set. This is available as an accessory (see "9.5. Ordering chart accessories" on page 20).

The Bürkert Communicator enables:

- Configuration, parameterisation and diagnosis of EDIP devices / networks
- Easy and convenient assignment (mapping) of cyclical values
- Graphical display of process values
- Firmware update of the connected EDIP devices
- Saving and restoring device configurations

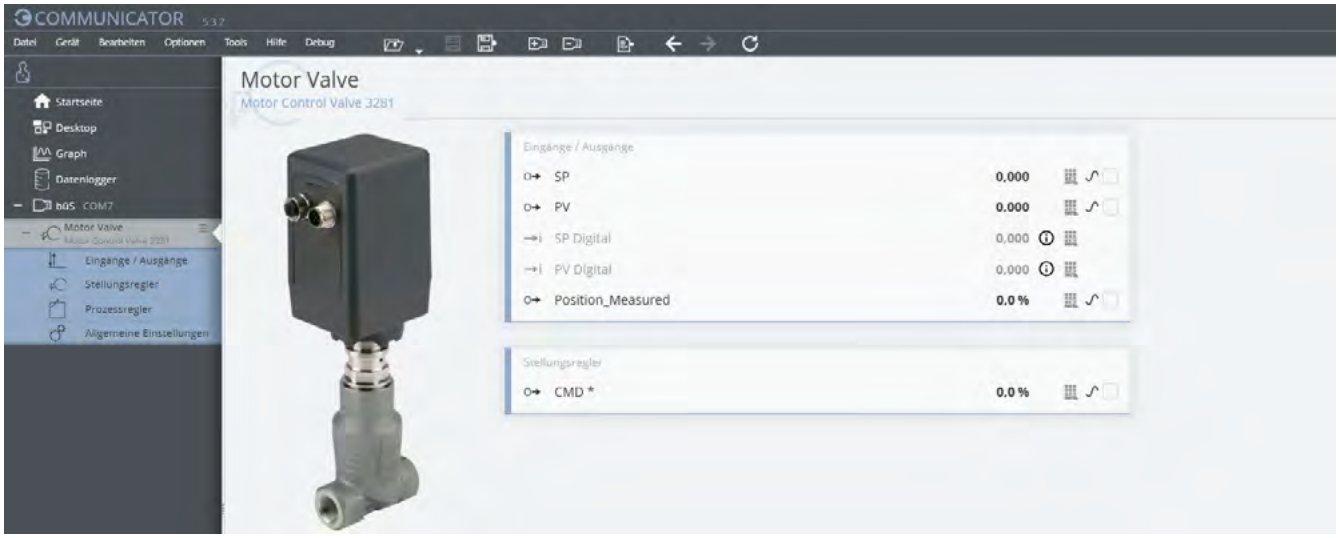

DTS 1000551383 EN Version: - Status: RL (released | freigegeben | valide) printed: 07.10.2026

valvesgo.com

8.3. Connection Type 3282 with Bürkert Communicator software

The Bürkert Communicator interface is based on CANopen. An appropriate bus termination is mandatory.
A büS stick is required to connect the motor valve to the Bürkert Communicator software tool. The USB-büS interface sets contains the necessary accessories.

- Variants with büS/CANopen communication interface:
  - Activate the switchable terminating resistor on the büS stick. Exception: if the device is already integrated in a properly terminated bus network, the terminating resistor must not be activated.
  - The connection is made directly via the 5-pin M12 plug (USB-büS interface set 1 contains the necessary accessories).
- Variants with standard signal interfaces:
  - Activate the switchable terminating resistor on the büS stick.
  - The connection is made via the 8-pin M12 plug on the device (USB-büS interface set 1 + büS adapter; socket 8-pin M12 to plug 5-pin M12 contain the necessary accessories).

9. Ordering information

9.1. Bürkert eShop

Bürkert eShop – Easy ordering and quick delivery

You want to find your desired Bürkert product or spare part quickly and order directly? Our online shop is available for you 24/7. Sign up and enjoy all the benefits.

Order online now

9.2. Recommendation regarding product selection

Note:

- The configuration of the seat size is very important for proportional valves to ensure proper functioning within the application. The seat size must be selected in such a way that on the one hand the desired flow range is achieved and on the other hand a sufficient part of the total pressure drop across the valve takes place when the valve is fully open.
- Reference value: pressure drop of the valve > 25 % of the total pressure drop
- Let Bürkert engineers advise you already in the planning phase.

9.3. Bürkert product filter

Bürkert product filter – Get quickly to the right product

You want to select products comfortably based on your technical requirements?
Use the Bürkert product filter and find suitable articles for your application quickly and easily.

Try out our product filter

DTS 1000551383 EN Version: - Status: RL (released | freigegeben | valide) printed: 07.10.2026

valvesgo.com

9.4. Bürkert Product Enquiry Form

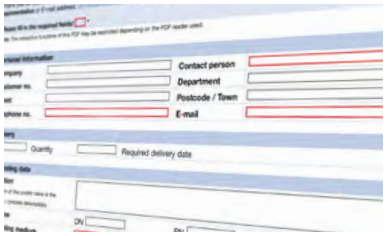

Bürkert Product Enquiry Form – Your enquiry quickly and compactly

Would you like to make a specific product enquiry based on your technical requirements? Use our Product Enquiry Form for this purpose. There you will find all the relevant information for your Bürkert contact. This will enable us to provide you with the best possible advice.

Fill out the form now

9.5. Ordering chart accessories

Standard accessories

Description	Article no.
Power supply unit Phoenix Class2 (Type 1573), 85...240 V AC/24 V DC, 1.25 A, NEC Class 2 (UL 1310)	772438
Power supply unit for standard rail (Type 1573), 100...240 V AC/24 V DC, 1 A, NEC Class 2 (UL 1310)	772361
Power supply unit for standard rail (Type 1573), 100...240 V AC/24 V DC, 2 A, NEC Class 2 (UL 1310)	772362
Power supply unit for standard rail (Type 1573), 100...240 V AC/24 V DC, 3,8 A, NEC Class 2 (UL 60950 - 1)	772898
Buffer module (Type 1573) for safety position in case of power failure	773440

Accessories cable

Description	Article no.
M12 circular socket with cable, 8-pin, cable length: 2 m, ready-made cable for input and output signals (for analogue variant)	919061
M12 circular socket with cable, 8-pin, cable length: 2 m, ready-made shielded cable for input and output signals (for analogue variant)	918991
M12 cable shielded, 5-pin, cable length: 2 m, ready-made shielded cable for actual process value input signals (only for variant with analogue/digital process controller)	559177

Bürkert accessories

Note:

- For connection to a büS/CANopen network, see „Supplement | Cabling guide büS/EDIP“ on our website under „User Manuals“, **Type 3281** ▶.
- Detailed accessory tables can be found in the cabling guide „Supplement | Cabling guide büS/EDIP“ on our website under „User Manuals“, **Type 3281** ▶.
- Can only be used with positioner and process controller variant

Description	Article no.
Software Bürkert Communicator	**Type 8920** ▶
büS adapter, M12 socket, 8-pin to M12 plug, 5-pin (for büS stick connection)	773286
USB-büS interface set 1 (Type 8923) for connection to the Bürkert Communicator software: includes connection cable (M12 and micro USB), stick with integrated terminating resistor, power supply and software	772426
USB-büS interface set 2 (Type 8923) for connection to the Bürkert Communicator software: including büS stick, connection cable to M12 plug, M12 connection cable on micro USB for the büS service interface and Y distributor, cable length: 0.7 m	772551

DTS 1000551383 EN Version: - Status: RL (released | freigegeben | valide) printed: 07.10.2026

valvesgo.com