bürkert
FLUID CONTROL SYSTEMS

2/2 or 3/2-way Whisper Valve with media separation

- Very fast switching at a low noise level < 45 dB(A)
- High pressure range up to 16 bar with nominal diameter DN 1.4 mm
- Highest chemical resistance
- Compact design with 18 mm installation width
- High back pressure tightness

Product variants described in the data sheet may differ from the product presentation and description.

Can be combined with

Type 2505
10 mm socket for Bürkert small solenoid valves

Type TVU001
Fitting connectors

Type TVU002
Push-in connectors

Type description

The combination of maximum flow and minimum valve size is becoming increasingly important in various medical and IVD related applications. Combined with high chemical resistance, this explains the broad range of applications for Type 6757. However, in addition to the flow, this valve is also able to switch pressures of up to 16 bar. This is a highlight of particular relevance for applications in the area of environmental analysis. The devices from the areas mentioned, including the valves, need to be flushed, cleaned, disinfected and sometimes even sterilised. Therefore, they need to withstand flushing cycles with high temperatures and/or high pressure, which is precisely what the Type 6757 was designed for. The product is thus ideally suitable for applications such as endoscope cleaning or dialysis, but also for use in environmental analysers. Fast switching times, as implemented here, guarantee high process safety because reliable switching behaviour is an important aspect for accurate dosing and reproducible processes.

DTS 1000551791 EN Version: E Status: RL (released | freigegeben | valide) printed: 11.12.2025

© Christian Bürkert GmbH & Co. KG, Subject to alteration

valvesgo.com

Table of contents

1. General technical data 3

1.1. General data 3
1.2. Medium pressure 4
1.3. Flow characteristics 5
K_V value water 5
C_V value water 5
Q_{Nn} value air 6

2. Product variants 7

3. Circuit functions 7

4. Approvals and conformities 8

4.1. General notes 8
4.2. Conformity 8
4.3. Standards 8
4.4. Foods and beverages/Hygiene 8

5. Materials 9

5.1. Bürkert resistApp 9
5.2. Material specifications 9

6. Dimensions 10

6.1. Sub-base variant with rectangular plug Type 2505 10
6.2. Sub-base variant with flying leads 11
6.3. Width per station 12
6.4. Flange pattern (Bürkert sub-base 18 × 69 mm) 13
6.5. Threaded variant 14

7. Ordering information 15

7.1. Bürkert eShop 15
7.2. Bürkert product filter 15
7.3. Ordering chart 15
7.4. Ordering chart accessories 17
Rectangular cable plug Type 2505 17

DTS 1000551791 EN Version: E Status: RL (released | freigegeben | valide) printed: 11.12.2025

valvesgo.com

valvesgo.com

1. General technical data

1.1. General data

Product properties	
Dimensions	Further information can be found in chapter "6. Dimensions" on page 10.
Material	
Seal	FFKM, EPDM, FKM
Valve body	PEEK, PPS
Internal volume	Sub-base variant CF A DN 1.4: 550 µl Informations about further variants are available on request.
Orifice	DN 1.4...DN 4.0
Circuit function	A, B and T Further information can be found in chapter "3. Circuit functions" on page 7.
Typical product service life [1.)]	10 million switching cycles (according to laboratory endurance test)
Performance data	
Pressure range	Further information can be found in chapter "1.2. Medium pressure" on page 4.
Duty cycle [2.)]	
Single installation	100 % continuous operation
Block installation	70 % continuous operation (max. 10 min. duty cycle) Refer to **operating instructions Type 6757** ▶ for more information.
Switching noise	45 dB (A) [3.)]
Switching time [4.)]	Opening: ca. 7 ms (Pressure build-up 0...10 %) Closing: ca. 7 ms (Pressure reduction 100...90 %)
Electrical data	
Operating voltage	12 V DC, 24 V DC
Nominal power [5.)]	12 V: 5.0 W 24 V: 4.5 W
Voltage tolerance	± 5 % (including residual ripple)
Medium data	
Medium temperature	FFKM: + 15 °C...+ 50 °C FKM: 0 °C...+ 50 °C EPDM: 0 °C...+ 50 °C + 90 °C permissible for cleaning cycles (max. 30 minutes) [2.)]
Viscosity	Max. 21 mm^2/s
Product connections	
Electrical connection	Rectangular plug **Type 2505** ▶ Further information can be found in chapter "Rectangular cable plug Type 2505" on page 17. Two FEP flying leads 0.2 mm^2 (AWG24), pre-assembled, for non-detachable push-on installation by the customer
Port connection	Bürkert sub-base (18 × 69 mm) G ⅛ G ¼
Approvals and conformities	
Degree of protection	IP30 according to EN 60529
Foods and beverages/Hygiene	Further information can be found in chapter "4.4. Foods and beverages/Hygiene" on page 8.
Environment and installation	
Installation position	As required, preferably with actuator upright
Ambient temperature	FFKM: + 15 °C...+ 50 °C FKM: 0 °C...+ 50 °C EPDM: 0 °C...+ 50 °C

1.) The service life depends on the medium, temperature, pressure, sealing material and individual operating conditions.
2.) The maximum body temperature must not exceed + 110 °C. In continuous operation, care must be taken to ensure sufficient heat dissipation (convection) on the metal surface of the valve. Overheating of the valve can lead to damage. The valve must not be cycled during the flushing cycles.
3.) Measured in sound measurement chamber according to ISO3745 accuracy class 1. The value may differ under other conditions.
4.) Measurement at the valve outlet at + 20 °C according to DIN ISO 12238:2001
5.) No further power reduction possible

DTS 1000551791 EN Version: E Status: RL (released | freigegeben | valide) printed: 11.12.2025

valvesgo.com

1.2. Medium pressure

Circuit function	Orifice	Pressure range at the connection			Max. differential pressure 1.)	Flow direction
		BLIND	COM	NC		
	[mm]	[bar]	[bar]	[bar]	[bar]	
CF A 2/2-way solenoid valve Direct-acting Normally closed 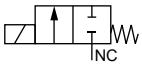	1.4	–	Vac...16		16	NC → COM
	2	–	Vac...10		10	
	3	–	Vac...6		6	
	4	–	Vac...3		3	

Circuit function	Orifice	Pressure range at the connection			Max. differential pressure 1.)	Flow direction
		NO	COM	BLIND		
	[mm]	[bar]	[bar]	[bar]	[bar]	
CF B 2/2-way solenoid valve Direct-acting Normally open 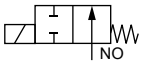	1.4	Vac...16		–	16	NO → COM
	2	Vac...10		–	10	
	3	Vac...6		–	6	
	4	Vac...3		–	3	

Circuit function	Orifice	Pressure range at the connection			Max. differential pressure 1.)	Flow direction
		NO	COM	NC		
	[mm]	[bar]	[bar]	[bar]	[bar]	
CF T 3/2-way solenoid valve Direct-acting Flow direction optional Universal 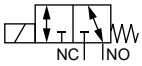	1.4	Vac...10			10	All flow directions allowed
	2	Vac...6			6	
	3	Vac...3			3	
	4	Vac...1.5			1.5	

1.) For vacuum operation, observe the permissible differential pressure and flow direction.

DTS 1000551791 EN Version: E Status: RL (released | freigegeben | valide) printed: 11.12.2025

valvesgo.com

valvesgo.com

1.3. Flow characteristics

K_V value water

Circuit function	Port connection	DN	K_V value water 1.)			
			NC → COM	NO → COM	COM → NC	COM → NO
			[m³/h]	[m³/h]	[m³/h]	[m³/h]
CF A 2/2-way solenoid valve Direct-acting Normally closed 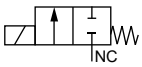	Sub-base, G ⅛	1.4	0.055	–	–	–
	Sub-base, G ⅛	2	0.080	–	–	–
	Sub-base, G ¼	3	0.200	–	–	–
	Sub-base	4	0.370	–	–	–
	G ¼	4	0.330	–	–	–
CF B 2/2-way solenoid valve Direct-acting Normally open 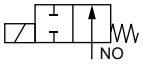	Sub-base, G ⅛	1.4	–	0.055	–	–
	Sub-base, G ⅛	2	–	0.080	–	–
	Sub-base, G ¼	3	–	0.200	–	–
	Sub-base	4	–	0.360	–	–
	G ¼	4	–	0.330	–	–
CF T 3/2-way solenoid valve Direct-acting Flow direction optional Universal 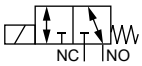	Sub-base, G ⅛	1.4	0.055	0.055	0.060	0.060
	Sub-base, G ⅛	2	0.080	0.080	0.080	0.080
	Sub-base, G ¼	3	0.200	0.200	0.240	0.240
	Sub-base	4	0.360	0.360	0.425	0.425
	G ¼	4	0.330	0.330	0.380	0.380

1.) Measurement at + 20 °C, 1 bar at the valve inlet and free outlet

C_V value water

Circuit function	Port connection	DN	C_V value water			
			NC → COM	NO → COM	COM → NC	COM → NO
			[gpm]	[gpm]	[gpm]	[gpm]
CF A 2/2-way solenoid valve Direct-acting Normally closed 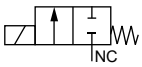	Sub-base, G ⅛	1.4	0.064	–	–	–
	Sub-base, G ⅛	2	0.092	–	–	–
	Sub-base, G ¼	3	0.231	–	–	–
	Sub-base	4	0.428	–	–	–
	G ¼	4	0.382	–	–	–
CF B 2/2-way solenoid valve Direct-acting Normally open 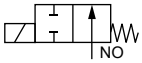	Sub-base, G ⅛	1.4	–	0.064	–	–
	Sub-base, G ⅛	2	–	0.092	–	–
	Sub-base, G ¼	3	–	0.231	–	–
	Sub-base	4	–	0.416	–	–
	G ¼	4	–	0.382	–	–
CF T 3/2-way solenoid valve Direct-acting Flow direction optional Universal 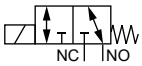	Sub-base, G ⅛	1.4	0.064	0.064	0.069	0.069
	Sub-base, G ⅛	2	0.092	0.092	0.092	0.092
	Sub-base, G ¼	3	0.231	0.231	0.277	0.277
	Sub-base	4	0.416	0.416	0.491	0.491
	G ¼	4	0.382	0.382	0.439	0.439

DTS 1000551791 EN Version: E Status: RL (released | freigegeben | valide) printed: 11.12.2025

valvesgo.com

Q_{Nn} value air

Circuit function	Port connection	DN	Q_{Nn} value air			
			NC → COM	NO → COM	COM → NC	COM → NO
			[l/min]	[l/min]	[l/min]	[l/min]
CF A 2/2-way solenoid valve Direct-acting Normally closed 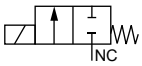	Sub-base, G ⅛	1.4	60	–	–	–
	Sub-base, G ⅛	2	86	–	–	–
	Sub-base, G ¼	3	215	–	–	–
	Sub-base	4	400	–	–	–
	G ¼	4	355	–	–	–
CF B 2/2-way solenoid valve Direct-acting Normally open 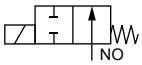	Sub-base, G ⅛	1.4	–	60	–	–
	Sub-base, G ⅛	2	–	86	–	–
	Sub-base, G ¼	3	–	215	–	–
	Sub-base	4	–	390	–	–
	G ¼	4	–	355	–	–
CF T 3/2-way solenoid valve Direct-acting Flow direction optional Universal 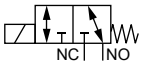	Sub-base, G ⅛	1.4	60	60	65	65
	Sub-base, G ⅛	2	86	86	86	86
	Sub-base, G ¼	3	215	215	260	260
	Sub-base	4	390	390	440	440
	G ¼	4	355	355	405	405

DTS 1000551791 EN Version: E Status: RL (released | freigegeben | valide) printed: 11.12.2025

valvesgo.com

valvesgo.com

2. Product variants

Sub-base variant PPS with rectangular plug	Sub-base variant PEEK with rectangular plug	Threaded variant G ⅛ PPS with rectangular plug	Threaded variant G ¼ PEEK with rectangular plug

Sub-base variant PEEK with flying leads	Threaded variant G ¼ PEEK with flying leads

3. Circuit functions

Symbol	Description
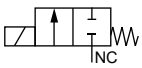	**Circuit function A (CF A)** 2/2-way solenoid valve Direct-acting Normally closed
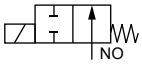	**Circuit function B (CF B)** 2/2-way solenoid valve Direct-acting Normally open
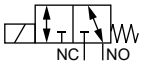	**Circuit function T (CF T)** 3/2-way solenoid valve Direct-acting Flow direction optional Universal

DTS 1000551791 EN Version: E Status: RL (released | freigegeben | valide) printed: 11.12.2025

valvesgo.com

4. Approvals and conformities

4.1. General notes

- The approvals and conformities listed below must be stated when making enquiries. This is the only way to ensure that the product complies with all required specifications.
- Not all available variants can be supplied with the below mentioned approvals or conformities.

4.2. Conformity

In accordance with the Declaration of Conformity, the product is compliant with the EU Directives.

4.3. Standards

The applied standards which are used to demonstrate compliance with the EU Directives are listed in the EU-Type Examination Certificate and/or the EU Declaration of Conformity.

4.4. Foods and beverages/Hygiene

Conformity	Description
FDA	**FDA – Code of Federal Regulations (valid for the variable code PL02, PL03)** All wetted materials are compliant with the Code of Federal Regulations published by the FDA (Food and Drug Administration, USA) according to the manufacturer's declaration.

DTS 1000551791 EN Version: E Status: RL (released | freigegeben | valide) printed: 11.12.2025

valvesgo.com

valvesgo.com

5. Materials

5.1. Bürkert resistApp

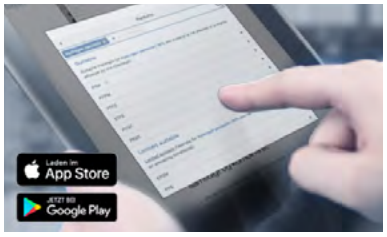

Bürkert resistApp – Chemical resistance chart

You want to ensure the reliability and durability of the materials in your individual application case? Verify your combination of media and materials on our website or in our resistApp.

Start chemical resistance check

5.2. Material specifications

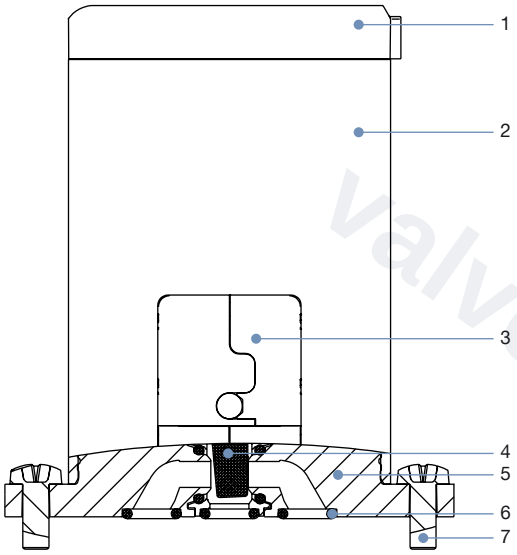

No.	Element	Material
1	Cover	PA
2	Coil housing	Nickel-plated
3	Valve housing	PPS
4	Diaphragm [1.)]	FFKM, EPDM, FKM
5	Valve body [1.)]	PEEK, PPS
6	Sub-base seal [1.)]	FFKM, EPDM, FKM
7	Oval head screw	Stainless steel

1.) Wetted

DTS 1000551791 EN Version: E Status: RL (released | freigegeben | valide) printed: 11.12.2025

valvesgo.com

valvesgo.com

6. Dimensions

6.1. Sub-base variant with rectangular plug Type 2505

Note:
Dimensions in mm

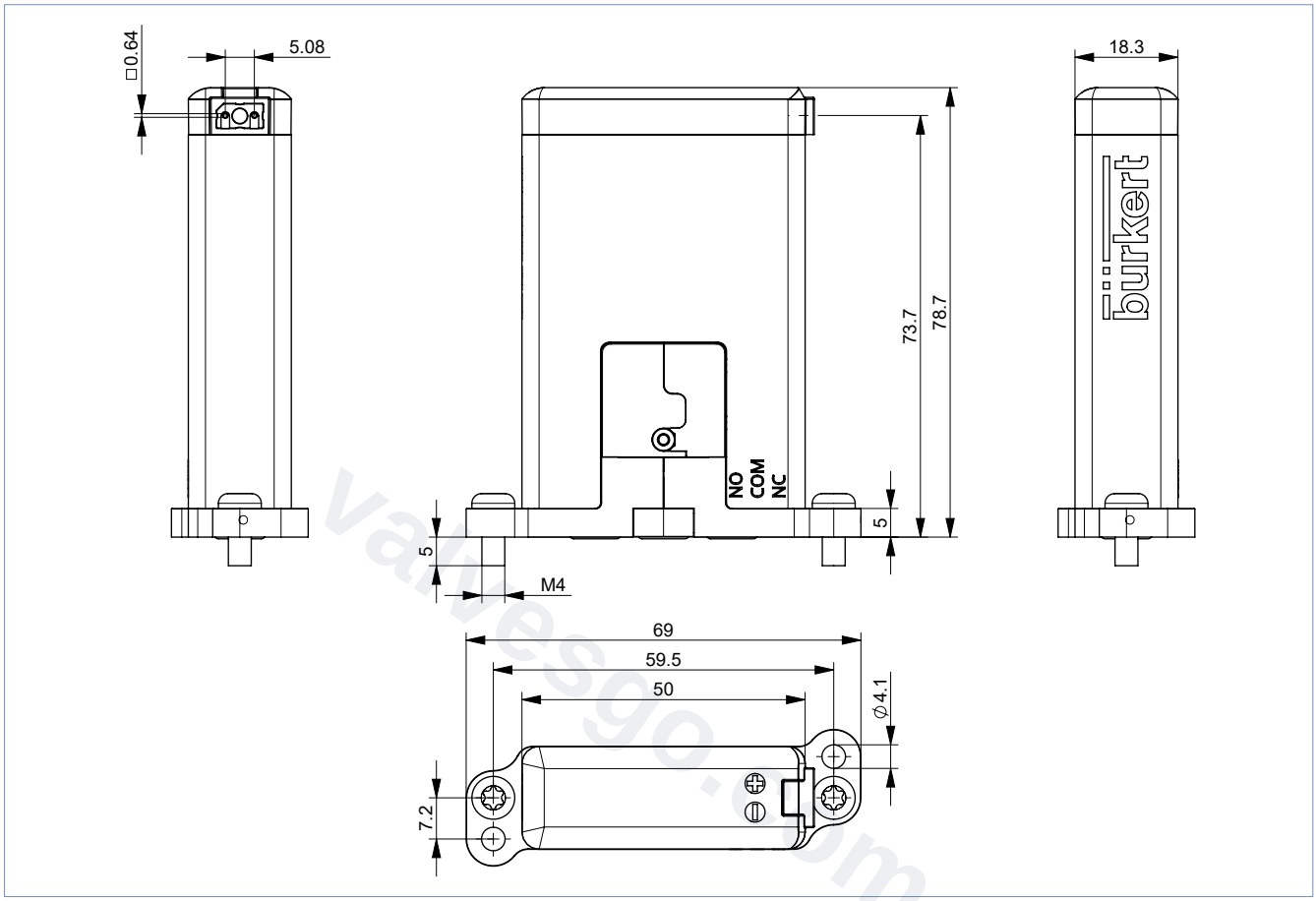

DTS 1000551791 EN Version: E Status: RL (released | freigegeben | valide) printed: 11.12.2025

valvesgo.com

6.2. Sub-base variant with flying leads

Note:
Dimensions in mm

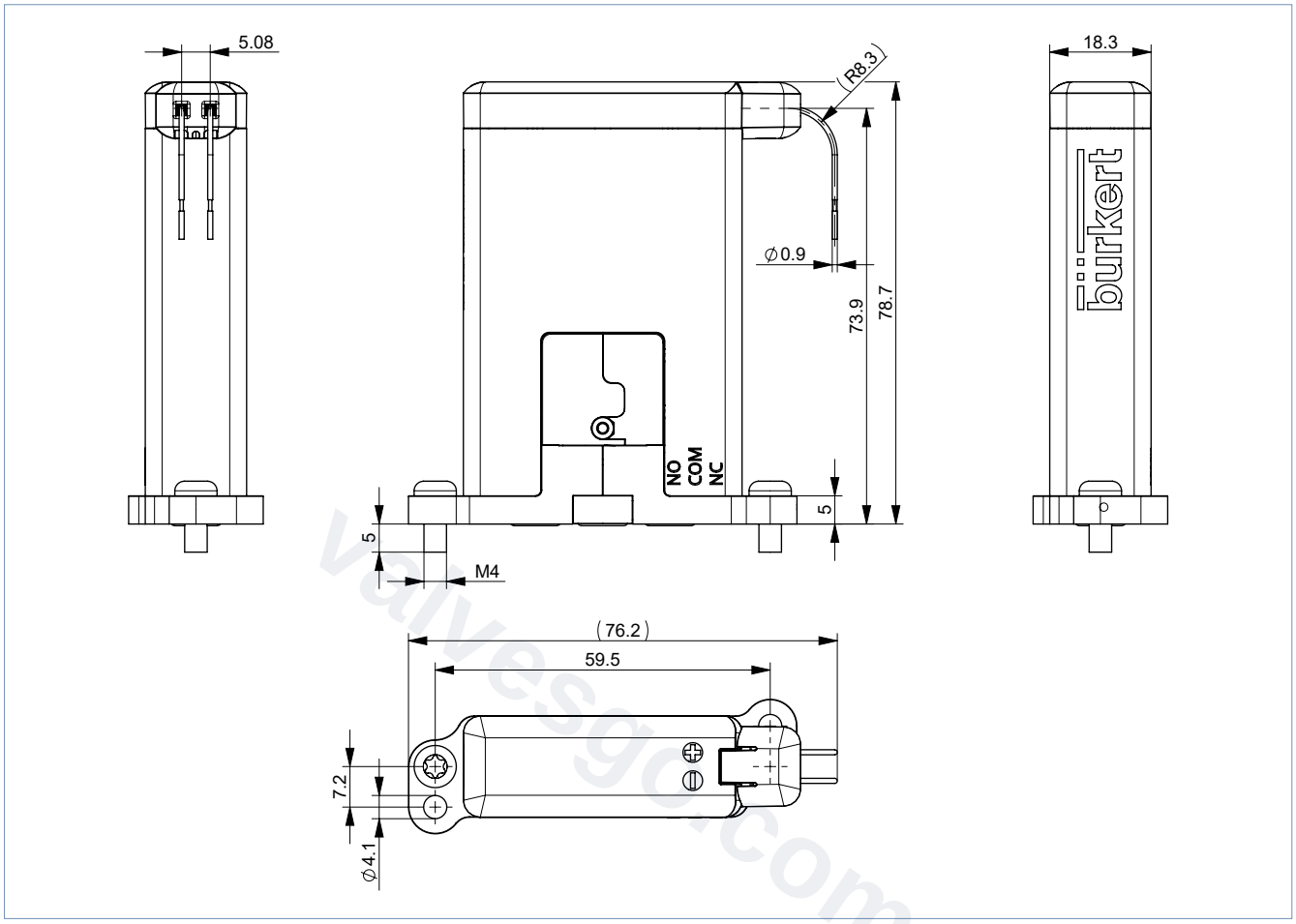

DTS 1000551791 EN Version: E Status: RL (released | freigegeben | valide) printed: 11.12.2025

valvesgo.com

6.3. Width per station

Note:
Dimensions in mm

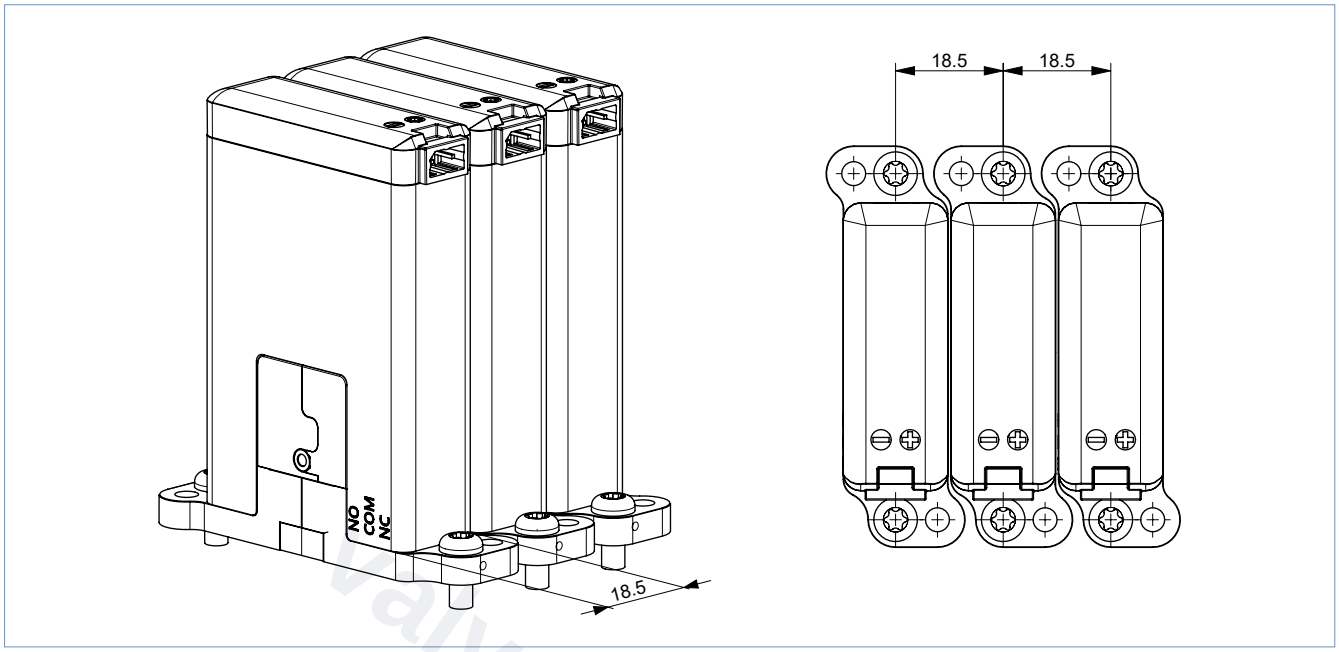

DTS 1000551791 EN Version: E Status: RL (released | freigegeben | valide) printed: 11.12.2025

valvesgo.com

valvesgo.com

6.4. Flange pattern (Bürkert sub-base 18 × 69 mm)

Note:

- Dimensions in mm
- Note the position of the electrical connection

Preferred threaded connection	Further possible threaded connection
2/2-way CF A (variant A1)	
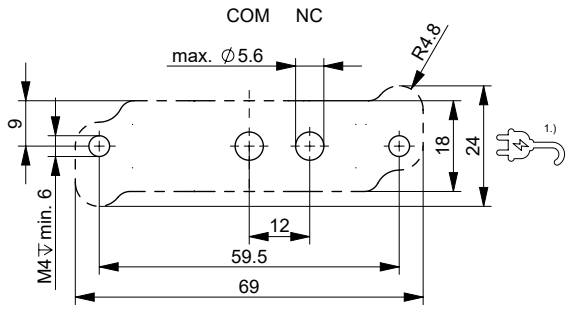	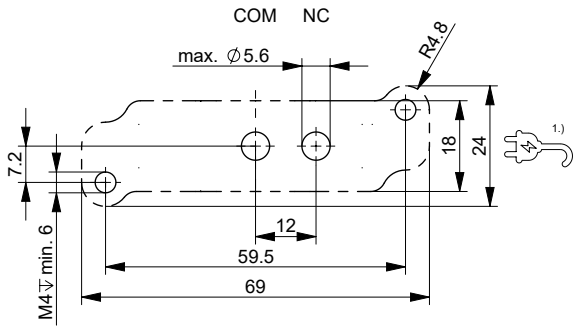
2/2-way CF B (variant B1)	
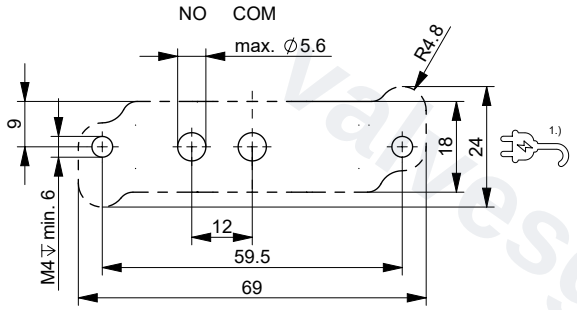	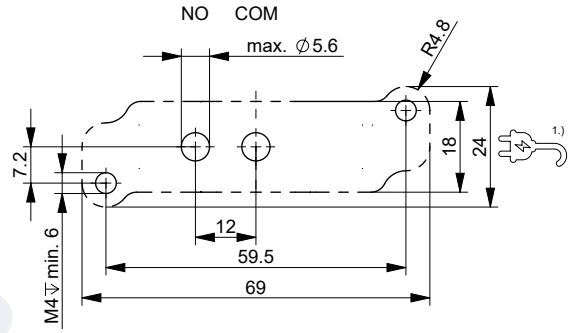
3/2-way CF T (variant A2)	
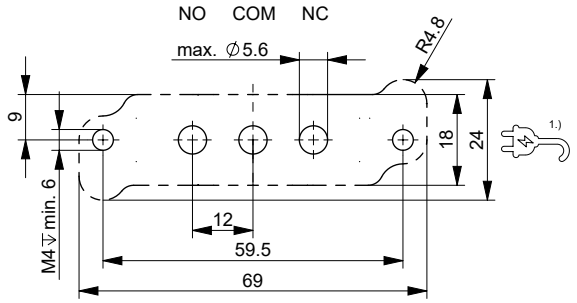	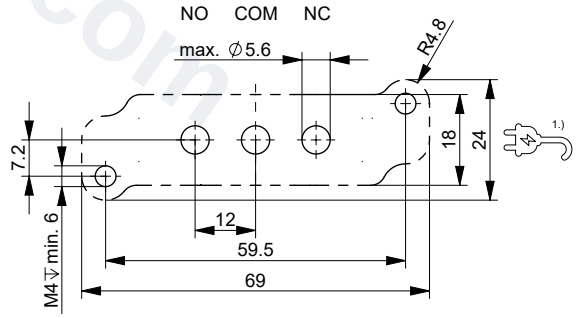

1.) Electrical connection

DTS 1000551791 EN Version: E Status: RL (released | freigegeben | valide) printed: 11.12.2025

valvesgo.com

6.5. Threaded variant

Note:

- Dimensions in mm
- G ⅛ and G ¼

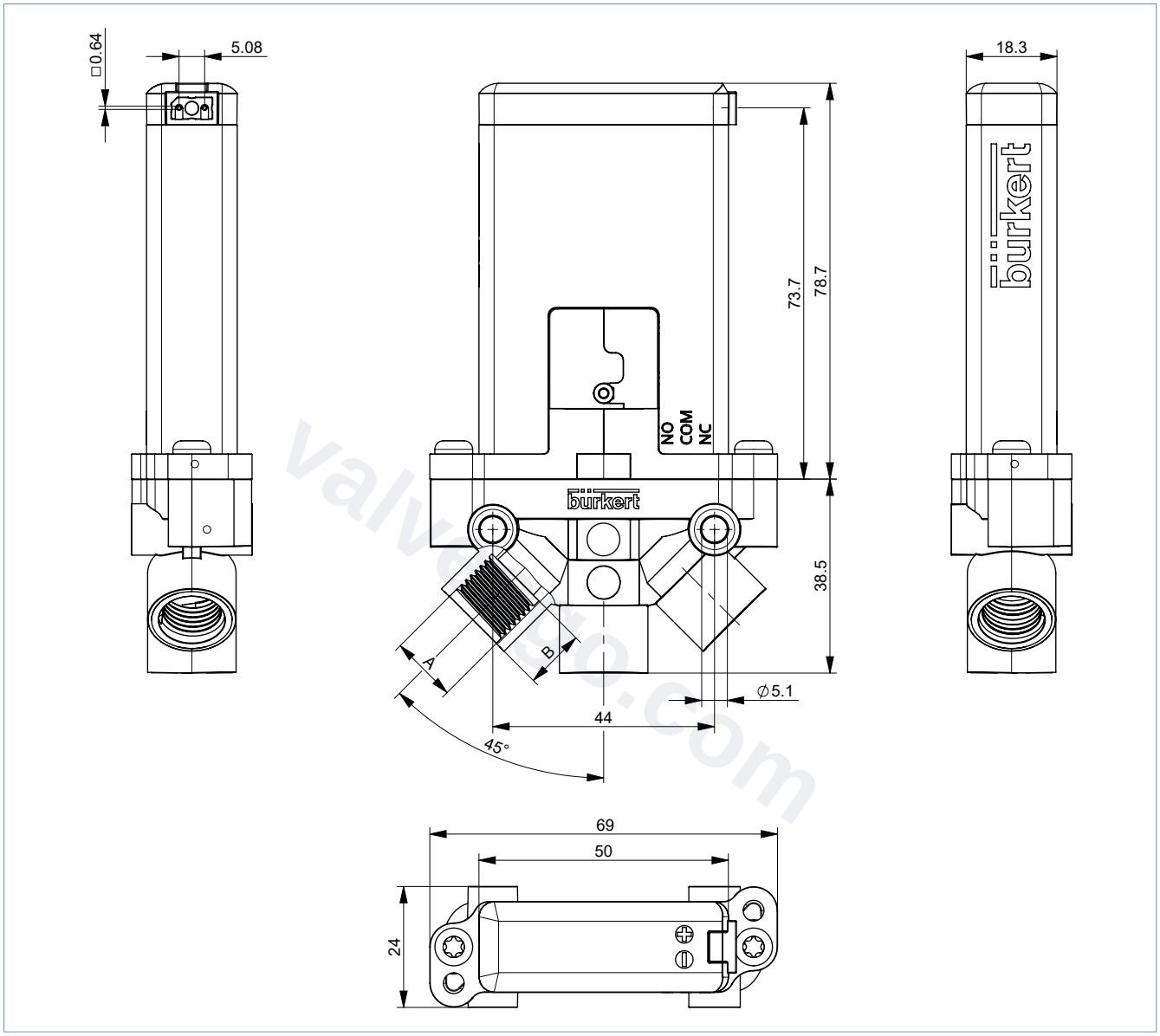

Port connection	A	B
Threaded connection	G ¼	9
	G ⅛	7

DTS 1000551791 EN Version: E Status: RL (released | freigegeben | valide) printed: 11.12.2025

valvesgo.com

7. Ordering information

7.1. Bürkert eShop

Bürkert eShop – Easy ordering and quick delivery

You want to find your desired Bürkert product or spare part quickly and order directly? Our online shop is available for you 24/7. Sign up and enjoy all the benefits.

Order online now

7.2. Bürkert product filter

Bürkert product filter – Get quickly to the right product

You want to select products comfortably based on your technical requirements?
Use the Bürkert product filter and find suitable articles for your application quickly and easily.

Try out our product filter

7.3. Ordering chart

Note:

- Other variants are available on request.
- 2x M4 × 10 fastening screws for sub-base variants are included in the delivery.
- Push-in connectors for rectangular plug are ot included in the scope of delivery and must be ordered separately, see "7.4. Ordering chart accessories" on page 17.

Circuit function	Port connection	Orifice	Voltage/ frequency	Pressure range	Max. pressure difference	Body material	Seal material	Electrical connection	Article no.
		[mm]	[V/Hz]	[bar] 1.) 2.)	[bar]				
CF A 2/2-way solenoid valve Direct-acting Normally closed 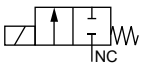	Sub-base	1.4	012/DC	Vac...16	16	PEEK	FFKM	Rectangular plug	20079939
	Sub-base	1.4	024/DC	Vac...16	16	PEEK	FFKM	Rectangular plug	324226
	Sub-base	1.4	024/DC	Vac...16	16	PEEK	FFKM	Flying leads, 0.5 m	20080039
	Sub-base	1.4	024/DC	Vac...16	16	PPS	FKM	Rectangular plug	20068218
	Sub-base	1.4	012/DC	Vac...16	16	PPS	EPDM	Rectangular plug	20079945
	Sub-base	1.4	024/DC	Vac...16	16	PPS	EPDM	Rectangular plug	20049070
	Sub-base	1.4	024/DC	Vac...16	16	PPS	EPDM	Flying leads, 0.5 m	20080499
	Sub-base	2	024/DC	Vac...10	10	PEEK	FFKM	Rectangular plug	20046836
	Sub-base	3	024/DC	Vac...6	6	PEEK	FFKM	Rectangular plug	20046840
	Sub-base	4	012/DC	Vac...3	3	PEEK	FFKM	Rectangular plug	20079943
	Sub-base	4	024/DC	Vac...3	3	PEEK	FFKM	Rectangular plug	324233
	Sub-base	4	024/DC	Vac...3	3	PEEK	FFKM	Flying leads, 0.5 m	20080153
	Sub-base	4	024/DC	Vac...3	3	PPS	FKM	Rectangular plug	20068225
	Sub-base	4	012/DC	Vac...3	3	PPS	EPDM	Rectangular plug	20080005
	Sub-base	4	024/DC	Vac...3	3	PPS	EPDM	Rectangular plug	20049077
	Sub-base	4	024/DC	Vac...3	3	PPS	EPDM	Flying leads, 0.5 m	20080502

DTS 1000551791 EN Version: E Status: RL (released | freigegeben | valide) printed: 11.12.2025

valvesgo.com

Circuit function	Port connection	Orifice	Voltage/ frequency	Pressure range	Max. pressure difference	Body material	Seal material	Electrical connection	Article no.
		[mm]	[V/Hz]	[bar] 1.) 2.)	[bar]				
CF A 2/2-way solenoid valve Direct-acting Normally closed 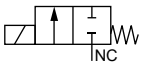	G ⅛	1.4	024/DC	Vac...16	16	PEEK	FFKM	Rectangular plug	338875
	G ⅛	1.4	024/DC	Vac...16	16	PEEK	FFKM	Flying leads, 0.5 m	20080434
	G ⅛	1.4	024/DC	Vac...16	16	PPS	FKM	Rectangular plug	20079889
	G ⅛	1.4	024/DC	Vac...16	16	PPS	EPDM	Rectangular plug	20049078
	G ⅛	1.4	024/DC	Vac...16	16	PPS	EPDM	Flying leads, 0.5 m	20080507
	G ¼	4.0	024/DC	Vac...3	3	PEEK	FFKM	Rectangular plug	20042773
	G ¼	4.0	024/DC	Vac...3	3	PEEK	FFKM	Flying leads, 0.5 m	20080467
	G ¼	4.0	024/DC	Vac...3	3	PPS	FKM	Rectangular plug	20079918
	G ¼	4.0	024/DC	Vac...3	3	PPS	EPDM	Rectangular plug	20049085
	G ¼	4.0	024/DC	Vac...3	3	PPS	EPDM	Flying leads, 0.5 m	20080522
CF B 2/2-way solenoid valve Direct-acting Normally open 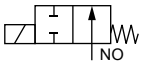	Sub-base	1.4	024/DC	Vac...16	16	PEEK	FFKM	Rectangular plug	324231
	Sub-base	1.4	024/DC	Vac...16	16	PPS	EPDM	Rectangular plug	20071609
	Sub-base	4	024/DC	Vac...3	3	PEEK	FFKM	Rectangular plug	324234
	Sub-base	4	024/DC	Vac...3	3	PPS	EPDM	Rectangular plug	20071612
	G ⅛	1.4	024/DC	Vac...16	16	PEEK	FFKM	Rectangular plug	20062277
	G ⅛	1.4	024/DC	Vac...16	16	PPS	EPDM	Rectangular plug	20080149
	G ¼	4.0	024/DC	Vac...3	3	PEEK	FFKM	Rectangular plug	20080899
	G ¼	4.0	024/DC	Vac...3	3	PPS	EPDM	Rectangular plug	20080898
CF T 3/2-way solenoid valve Direct-acting Flow direction optional Universal 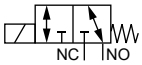	Sub-base	1.4	012/DC	Vac...10	10	PEEK	FFKM	Rectangular plug	20073835
	Sub-base	1.4	024/DC	Vac...10	10	PEEK	FFKM	Rectangular plug	324232
	Sub-base	1.4	024/DC	Vac...10	10	PEEK	FFKM	Flying leads, 0.5 m	20080470
	Sub-base	1.4	024/DC	Vac...10	10	PPS	FKM	Rectangular plug	20068219
	Sub-base	1.4	012/DC	Vac...10	10	PPS	EPDM	Rectangular plug	20080015
	Sub-base	1.4	024/DC	Vac...10	10	PPS	EPDM	Rectangular plug	20049071
	Sub-base	1.4	024/DC	Vac...10	10	PPS	EPDM	Flying leads, 0.5 m	20080523
	Sub-base	2	024/DC	Vac...6	6	PEEK	FFKM	Rectangular plug	20046838
	Sub-base	3	024/DC	Vac...3	3	PEEK	FFKM	Rectangular plug	20046843
	Sub-base	4	012/DC	Vac...1.5	1.5	PEEK	FFKM	Rectangular plug	20073849
	Sub-base	4	024/DC	Vac...1.5	1.5	PEEK	FFKM	Rectangular plug	324235
	Sub-base	4	024/DC	Vac...1.5	1.5	PEEK	FFKM	Flying leads, 0.5 m	20080478
	Sub-base	4	024/DC	Vac...1.5	1.5	PPS	FKM	Rectangular plug	20068226
	Sub-base	4	012/DC	Vac...1.5	1.5	PPS	EPDM	Rectangular plug	20080036
	Sub-base	4	024/DC	Vac...1.5	1.5	PPS	EPDM	Rectangular plug	20005572
	Sub-base	4	024/DC	Vac...1.5	1.5	PPS	EPDM	Flying leads, 0.5 m	20080524
	G ⅛	1.4	024/DC	Vac...10	10	PEEK	FFKM	Rectangular plug	338877
	G ⅛	1.4	024/DC	Vac...10	10	PEEK	FFKM	Flying leads, 0.5 m	20080488
	G ⅛	1.4	024/DC	Vac...10	10	PPS	FKM	Rectangular plug	20070241
	G ⅛	1.4	024/DC	Vac...10	10	PPS	EPDM	Rectangular plug	20049079
	G ⅛	1.4	024/DC	Vac...10	10	PPS	EPDM	Flying leads, 0.5 m	20080525
	G ¼	4.0	024/DC	Vac...1.5	1.5	PEEK	FFKM	Rectangular plug	366049
	G ¼	4.0	024/DC	Vac...1.5	1.5	PEEK	FFKM	Flying leads, 0.5 m	20080493
	G ¼	4.0	024/DC	Vac...1.5	1.5	PPS	FKM	Rectangular plug	20079933
	G ¼	4.0	024/DC	Vac...1.5	1.5	PPS	EPDM	Rectangular plug	20049086
	G ¼	4.0	024/DC	Vac...1.5	1.5	PPS	EPDM	Flying leads, 0.5 m	20080526

1.) Pressure data: overpressure to atmospheric pressure
2.) The water hammer with incompressible media must not exceed the maximum permissible differential pressure.

DTS 1000551791 EN Version: E Status: RL (released | freigegeben | valide) printed: 11.12.2025

valvesgo.com

valvesgo.com

7.4. Ordering chart accessories

Rectangular cable plug Type 2505

Note:
For further variants see data sheet **Type 2505** ▶.

Accessories	Description	Article no.
	Cable plug 10 mm with cable, 2-pin, rectangular plug, straight, cable length: 3 m (Type 2505)	252572
	Cable plug 10 mm with cable, 2-pin, rectangular plug, straight, cable length: 5 m (Type 2505)	255194
	Cable plug 10 mm with cable, 2-pin, rectangular plug, straight, cable length: 0,3 m (Type 2505)	644068
	Cable plug 10 mm with cable, 2-pin, rectangular plug, straight, cable length: 0.6 m (Type 2505)	162144
	Cable plug 10 mm with cable, 2-pin, rectangular plug, angled, cable length: 3 m (Type 2505)	381035

valvesgo.com

DTS 1000551791 EN Version: E Status: RL (released | freigegeben | valide) printed: 11.12.2025

valvesgo.com