bürkert
FLUID CONTROL SYSTEMS









Electromotive 2-way globe control valve

- Hydrogen variant available
- Highly precise, dynamic closed-loop control
- Weather, impact and vibration resistant design
- Several K_{VS} values per port size due to removable valve seats
- Position controller and process controller available

Product variants described in the data sheet may differ from the product presentation and description.

Can be combined with



Type ME61
EDIP process display



Type ME63
Industrial Ethernet gateway, IP65/IP67/IP69k



Type ME43
Fieldbus gateway



Type 8008
Flow meter for gases with calorimetric measuring



Type 8098
FLOWave SAW flowmeter

Type description

The innovative process controller Bürkert valve Type 3361 is the solution when it comes to control tasks under demanding operating conditions. The electromotive actuator with ball screw positions the control cone with highest precision. A unique feature is its high positioning speed up to 6 mm/s that reacts almost delay-free to process signals and that can be varied according to customer demands. Pressure variations or shocks in the medium are not transferred to the valve position. Each flow optimised valve body can be equipped with up to 5 different valve seats for a precise adaptation according to customer needs. If necessary, the safety position can be approached by an optional energy storage in case of power failure. Actuator and valve are adapted perfectly to each other with closed design and robust surface. This ensures the hygienic requirements of fast and residue-free cleaning. Harsh environmental conditions are no problem for the Type 3361 because of the degree of protection IP65/IP67 and its high impact and vibration resistance. Unrivalled service life and tightness is guaranteed by the proven self-adjusting packing gland with exchangeable V-seals. The fieldbus-compatible Type 3361 provides many helpful functions for process monitoring, valve diagnostics and predictive maintenance and thus offers the decisive advantage of a modern process automation.

DTS 1000273351 EN Version: - Status: RL (released | freigegeben | valide) printed: 28.10.2026

© Christian Bürkert GmbH & Co. KG, Subject to alteration

Visit product website

valvesgo.com

Table of contents

1. General technical data 4

2. Approvals and conformities 6

2.1. General notes ... 6
2.2. Conformity ... 6
2.3. Standards ... 6
2.4. Explosion protection ... 6
2.5. North America (USA/Canada) ... 6
2.6. Drinking water ... 6
2.7. Foods and beverages/Hygiene ... 7
2.8. Others ... 7
Oxygen ... 7
Hydrogen ... 7
TA Luft ... 7

3. Materials 8

3.1. Bürkert resistApp ... 8
3.2. Material specifications ... 8

4. Dimensions 10

4.1. Actuator ... 10
AG2 ... 10
AG3 ... 12
4.2. Body with flange connection ... 14
4.3. Body with threaded connection ... 15
4.4. Body with welded connection ... 16
4.5. Body with clamp connection ... 17

5. Product connections 18

5.1. Electrical connection ... 18
Description of circular plug-in connectors ... 18
Circular plug-in connector with pin assignment ... 21

6. Performance specifications 23

6.1. Fluidic data ... 23
Flow characteristics ... 23
Overview of fluidic data for flow below seat (for liquids, steam and gases) ... 24
6.2. Operating limits ... 26
Operating limits for medium temperature and operating pressure ... 26
Operating limits for ambient and medium temperature ... 27
Operating limits for seat seal ... 28
Operating limits for optional variants ... 28
6.3. Electrical control and interfaces ... 29
Interface diagram ... 29

7. Product design and assembly 30

7.1. Product features ... 30
7.2. Product assembly ... 33
Design of electromotive valve Type 3361 AG2 ... 33
Design of electromotive valve Type 3361 AG3 ... 34

DTS 1000273351 EN Version: - Status: RL (released | freigegeben | valide) printed: 28.10.2026

valvesgo.com

valvesgo.com

8. Ordering information **35**

8.1. Bürkert eShop 35
8.2. Bürkert product filter 35
8.3. Bürkert Product Enquiry Form 35
8.4. Ordering chart accessories 36
Standard accessories 36
Connection cable 36
büS interface 36

valvesgo.com

DTS 1000273351 EN Version: - Status: RL (released | freigegeben | valide) printed: 28.10.2026

valvesgo.com

1. General technical data

Note:

- AG2: actuator size 2 with a nominal force of 1300 or 2500 N for seat size 3...50
- AG3: actuator size 3 with a nominal force of 7700 or 10000 N for seat size 40...100

Product properties	
Dimensions	Further information can be found in chapter "4. Dimensions" on page 10.
Material	Further information can be found in chapter "3. Materials" on page 8.
Design	Globe control valve
Nominal diameter (port connection)	DN 10...DN 100, NPS ⅜...4
Safety setting in case of power failure	With energy storage SAFEPOS energy-pack: open, closed or freely programmable position Without energy storage SAFEPOS energy-pack: blocked in last position
Flow direction	Against closing direction (below seat)
Controller variant	Positioner or process controller (option)
Weight	Depending on actuator variant up to: AG2: 5.5 kg AG3: 16 kg (Total weight including valve body depending on port connection)
Performance data	
Operating pressure	0...25 bar(g), 40 bar(g) on request (see "6.1. Fluidic data" on page 23) Vacuum variant...- 0.9 bar(g) (optional)
Nominal pressure	PN 25/PN 40 (DIN EN 1333), Class 150 (DIN EN 1759)
K_{VS} value	0.1...140 m^3/h (see "6.1. Fluidic data" on page 23)
Flow characteristic	Equal percentage, linear (on request)
Seat leakage	Class III, IV and VI (DIN EN 60534 - 4) (see "6.1. Fluidic data" on page 23)
Closing time [1.]	AG2: 3.3...6.6 s AG3: 8.7...12.0 s (Depending on travel speed, stroke and operating conditions)
Theoretical rangeability	Up to 50:1 (see "6.1. Fluidic data" on page 23)
Travel speed [1.]	6 mm/s (for AG2 actuator force 1300 N) 4 mm/s (for AG2 actuator force 2500 N) 3 mm/s (for AG3 actuator force 7700 N and 10000 N) (Depending on operating conditions)
Dead band of the position control	± 0.1 %
Electrical data	
Operating voltage	24 V DC ± 10 % (maximum residual ripple 10 %)
Operating current [1.]	AG2: maximum 3 A (at maximum load and including 1 A charging current of the optional energy storage SAFEPOS energy-pack). At minimum operating temperature additionally 2 A AG3: maximum 5 A (at maximum load and including charging current of the optional energy storage SAFEPOS energy-pack). At minimum operating temperature additionally 6 A
Protection class (DIN EN 61140)	III
Duty cycle	100 %
Standby consumption [1.]	2...5 W
Communication and control	
Standard signal (analogue)	Set-point value: 0/4...20 mA, 0...5/10 V and binary input (further inputs and outputs optional, see "6.3. Electrical control and interfaces" on page 29)
Fieldbus (digital)	Bürkert system bus (büS) CANopen (optional) EtherNet/IP, PROFINET, Modbus TCP, EtherCAT (optional via integrated gateway)
Medium data	
Operating medium	Steam, neutral gases, water, alcohols, oils, fuels, hydraulic fluids, salt solutions, organic solvents, oxygen (optional), hydrogen (optional), lyes (optional)
Medium temperature	- 40 °C...+ 230 °C (see "6.2. Operating limits" on page 26)
Viscosity	Up to 600 mm^2/s

DTS 1000273351 EN Version: - Status: RL (released | freigegeben | valide) printed: 28.10.2026

valvesgo.com

Product connections	
Port connection [2.]	
Welded connection	DIN EN ISO 1127 / ISO 4200 / DIN 11866 series B DIN 11850 - 2 / DIN 11866 series A ASME BPE / DIN 11866 series C SMS 3008
Clamp connection	DIN 32676 series B (pipe: ISO 4200) DIN 32676 series A (pipe: DIN 11850 - 2) ASME BPE
Threaded connection	G (DIN ISO 228 - 1) NPT (ASME B1.20.1) RC (ISO 7 - 1)
Flange connection	DIN EN 1092 - 1 ANSI B 16.5 JIS 10K
Electrical connection	
Actuator	Terminal strip with cable bushing, 3 x M20 (only AG2) or 2 x M12 circular plugs, 5-pin and 8-pin, 1 x M12 circular socket, 5-pin (only for process controller function)
Fieldbus gateway	2 x M12 circular sockets, 4-pin (only with Industrial Ethernet) Further information can be found in chapter "5. Product connections" on page 18.
Approvals and conformities	
Further information can be found in chapter "2. Approvals and conformities" on page 6.	
Detergent resistance	According to Ecolab test method: F&E/P3-E No. 40 - 1
Environment and installation	
Environmental factors	Protect the device from electromagnetic interference, UV radiation and, when used outdoors, from weather conditions.
Ambient temperature	- 25 °C...+ 65 °C (only without additional modules) (Derating see "Operating limits for ambient and medium temperature" on page 27)
Degree of protection	IP65/IP67 (DIN EN 60529), NEMA 4X
Installation position	Any, preferably with actuator upright

1.) All values relate to a supply voltage of 24 V at + 25 °C.
2.) Others are available on request.

DTS 1000273351 EN Version: - Status: RL (released | freigegeben | valide) printed: 28.10.2026

valvesgo.com

2. Approvals and conformities

2.1. General notes

- The approvals and conformities listed below must be stated when making enquiries. This is the only way to ensure that the product complies with all required specifications.
- Not all available variants can be supplied with the below mentioned approvals or conformities.

2.2. Conformity

In accordance with the Declaration of Conformity, the product is compliant with the EU Directives.

2.3. Standards

The applied standards which are used to demonstrate compliance with the EU Directives are listed in the EU-Type Examination Certificate and/or the EU Declaration of Conformity.

2.4. Explosion protection

Approval	Description
	Optional: Explosion protection (valid for the variable code PX48) As a category 3 device suitable for zone 2/22. **ATEX:** BVS 17 ATEX E 117 X II 3G Ex ec IIC T4 Gc II 3D Ex tc IIIC T135 °C Dc **IECEx:** IECEx BVS 17.0100X Ex ec IIC T4 Gc Ex tc IIIC T135 °C Dc

2.5. North America (USA/Canada)

Approval	Description
	Optional: Actuators UL Listed for the USA and Canada (valid for the variable code PU11) The actuators are UL Listed for the USA and Canada according to: • UL 61010-1 (ELECTRICAL EQUIPMENT FOR MEASUREMENT, CONTROL, AND LABORATORY USE – Part 1: General Requirements) • CAN/CSA-C22.2 No. 61010-1

2.6. Drinking water

Conformity	Description
H_2O	**Optional: Suitable for use in drinking water applications (valid for the variable code PF39)** The materials comply with the assessment principles (UBA) for materials in contact with drinking water (TrinkwasserV). PF39: Suitable for products with a maximum temperature of + 85 °C (hot water)

DTS 1000273351 EN Version: - Status: RL (released | freigegeben | valide) printed: 28.10.2026

valvesgo.com

2.7. Foods and beverages/Hygiene

Conformity	Description
FDA	**FDA – Code of Federal Regulations (valid for the variable code PL02, PL03)** All wetted materials are compliant with the Code of Federal Regulations published by the FDA (Food and Drug Administration, USA) according to the manufacturer's declaration.
USP	**United States Pharmacopeial Convention (USP) (valid for the variable code PL04)** All wetted materials are biocompatible according to the manufacturer's declaration.
	**EC Regulation 1935/2004 of the European Parliament and of the Council (valid for the variable code PL01, PL02)** All wetted materials are compliant with EC Regulation 1935/2004/EC according to the manufacturer's declaration.
	**China food GB Standards of the People's Republic of China (valid for the variable code PL10)** All wetted materials are compliant with the requirement of China food GB Standards according to the manufacturer's declaration.

2.8. Others

Oxygen

Conformity	Description
O_2	**Optional: Suitability for oxygen (valid for the variable code NL02)** The products are suitable for use with gaseous oxygen, according to the manufacturer's declaration.

Hydrogen

Conformity	Description
H_2	**Optional: Suitability for hydrogen (valid for the variable code NG18)** The products are suitable for use with gaseous hydrogen, according to the manufacturer's declaration.

TA Luft

Conformity	Description
TA Luft	**Technical instruction on air quality control (valid for the variable code PM01)**

valvesgo.com

DTS 1000273351 EN Version: - Status: RL (released | freigegeben | valide) printed: 28.10.2026

valvesgo.com

3. Materials

3.1. Bürkert resistApp

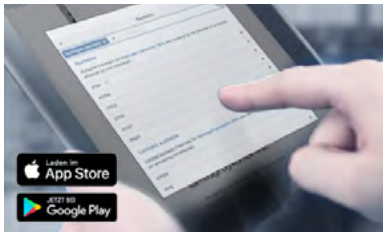

Bürkert resistApp – Chemical resistance chart

You want to ensure the reliability and durability of the materials in your individual application case? Verify your combination of media and materials on our website or in our resistApp.

Start chemical resistance check

3.2. Material specifications

Note:
The Type 3361 globe control valve is supplied with different port connections (flange, thread, weld end and clamp connections). These connections are not shown. They correspond to the valve body material.

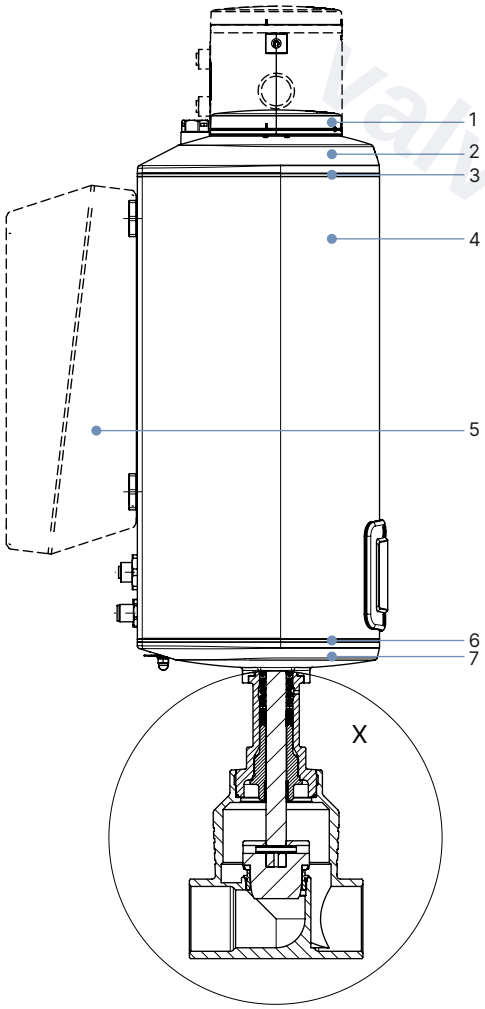

AG2

No.	Component	Material
1	Display housing/blind cover/ gateway housing	PPS (standard), stainless steel 1.4301 (for ATEX/IECEx)
2	Actuator cover	PPS
3	Seal	EPDM
4	Actuator housing	Powder-coated aluminium
6	Seal	EPDM
7	Actuator base	PPS

AG3

No.	Component	Material
1	Display housing/blind cover/ gateway housing	PPS (standard), stainless steel 1.4301 (for ATEX/IECEx)
2	Actuator cover	PC
3	Seal	EPDM
4	Actuator housing	Powder-coated aluminium
5	Energy storage SAFEPOS energy-pack housing	PC
6	Seal	EPDM
7	Actuator base	Stainless steel 1.4308

DTS 1000273351 EN Version: - Status: RL (released | freigegeben | valide) printed: 28.10.2026

valvesgo.com

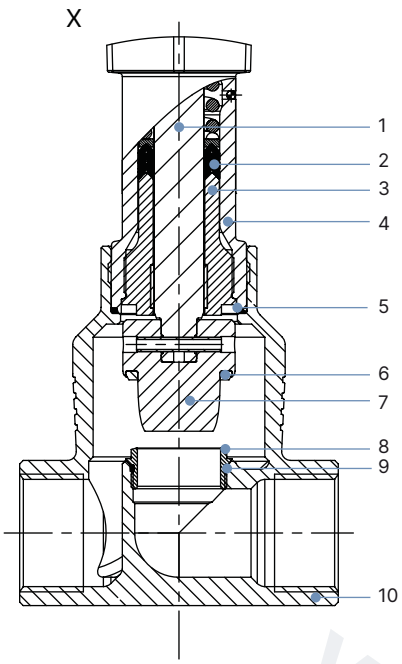

No.	Component	Material
1	Spindle	Stainless steel 1.4401 (316)/1.4404 (316L)
2	Spindle seal	PTFE V-seals (filled) with spring compensation
3	Spindle guide	Stainless steel 1.4404 (316L)
4	Packing gland tube	Stainless steel 1.4401 (316)
5	Seal valve body	Graphite or PTFE
6	Seat seal	Stainless steel 1.4571 (optionally hardened) PTFE or PEEK seal washer
7	Control cone	Stainless steel 1.4571 (optionally hardened)
8	Valve seat	Stainless steel 1.4571 (optionally hardened)
9	O-ring valve seat	EPDM or PTFE
10	Valve body	Stainless steel CF3M

valvesgo.com

DTS 1000273351 EN Version: - Status: RL (released | freigegeben | valide) printed: 28.10.2026

valvesgo.com

4. Dimensions

4.1. Actuator

AG2

Note:
Dimensions in mm, unless otherwise stated

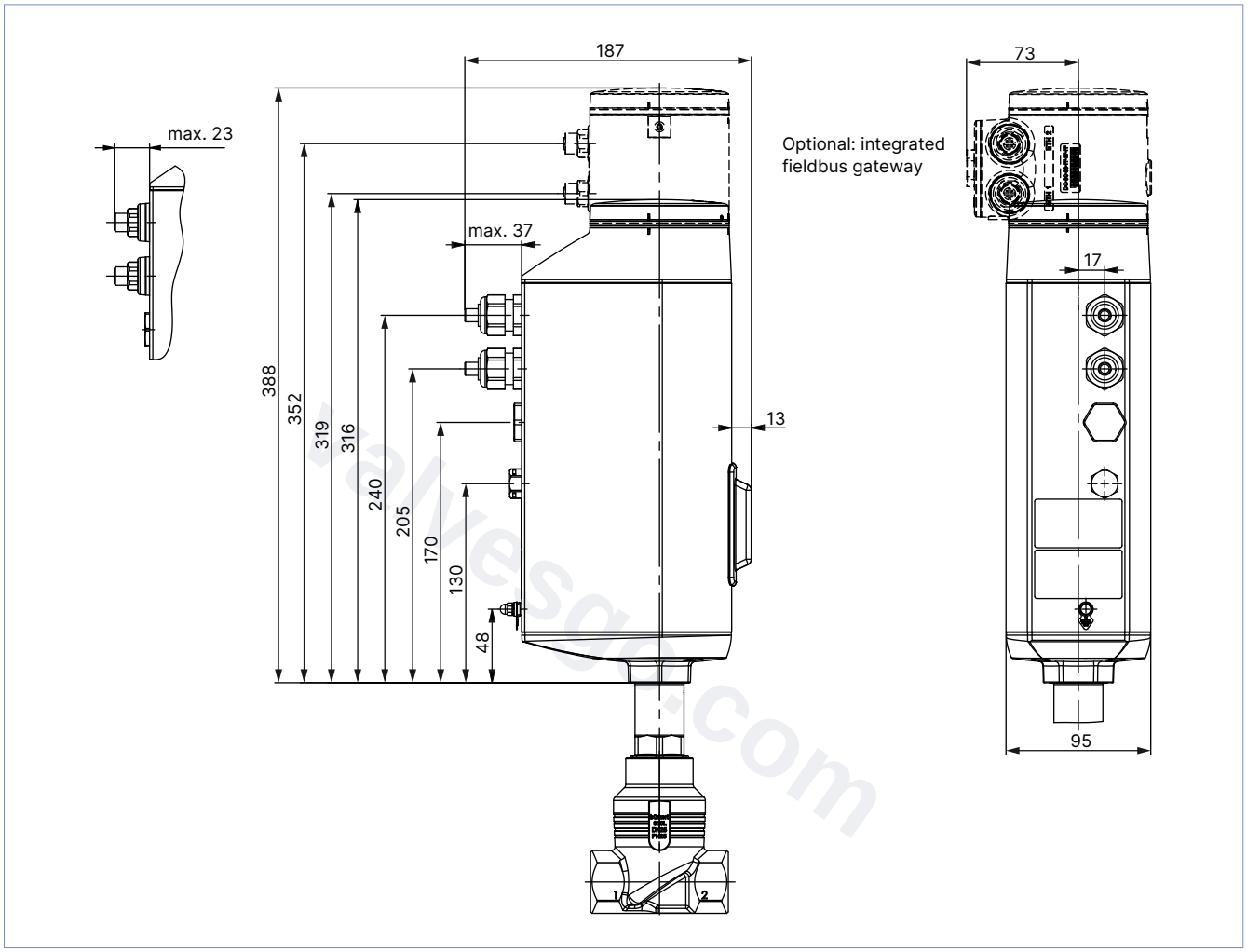

valvesgo.com

DTS 1000273351 EN Version: - Status: RL (released | freigegeben | valide) printed: 28.10.2026

valvesgo.com

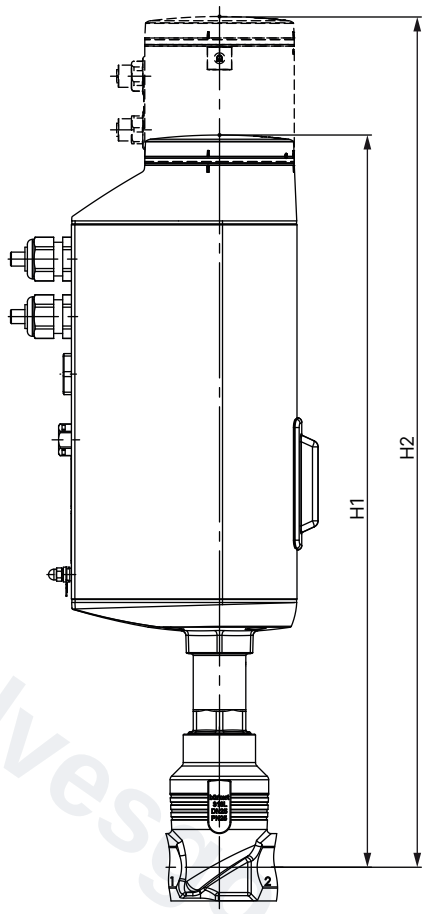

Nominal diameter (port connection)		Height [1.]	
DN	NPS	H1 Standard variant	H2 [2.] Fieldbus variant (KOMM ≠ G, N, L)
10	⅜	417	489
15	½	417	489
20	¾	423	495
25	1	446	518
32	1¼	474	546
40	1½	479	551
50	2	485	557

1.) Dimensions without sealing function: the actuator is raised by approx. 2 mm in the closed position.
2.) Optional: integrated fieldbus gateway

DTS 1000273351 EN Version: - Status: RL (released | freigegeben | valide) printed: 28.10.2026

valvesgo.com

AG3

Note:
Dimensions in mm, unless otherwise stated

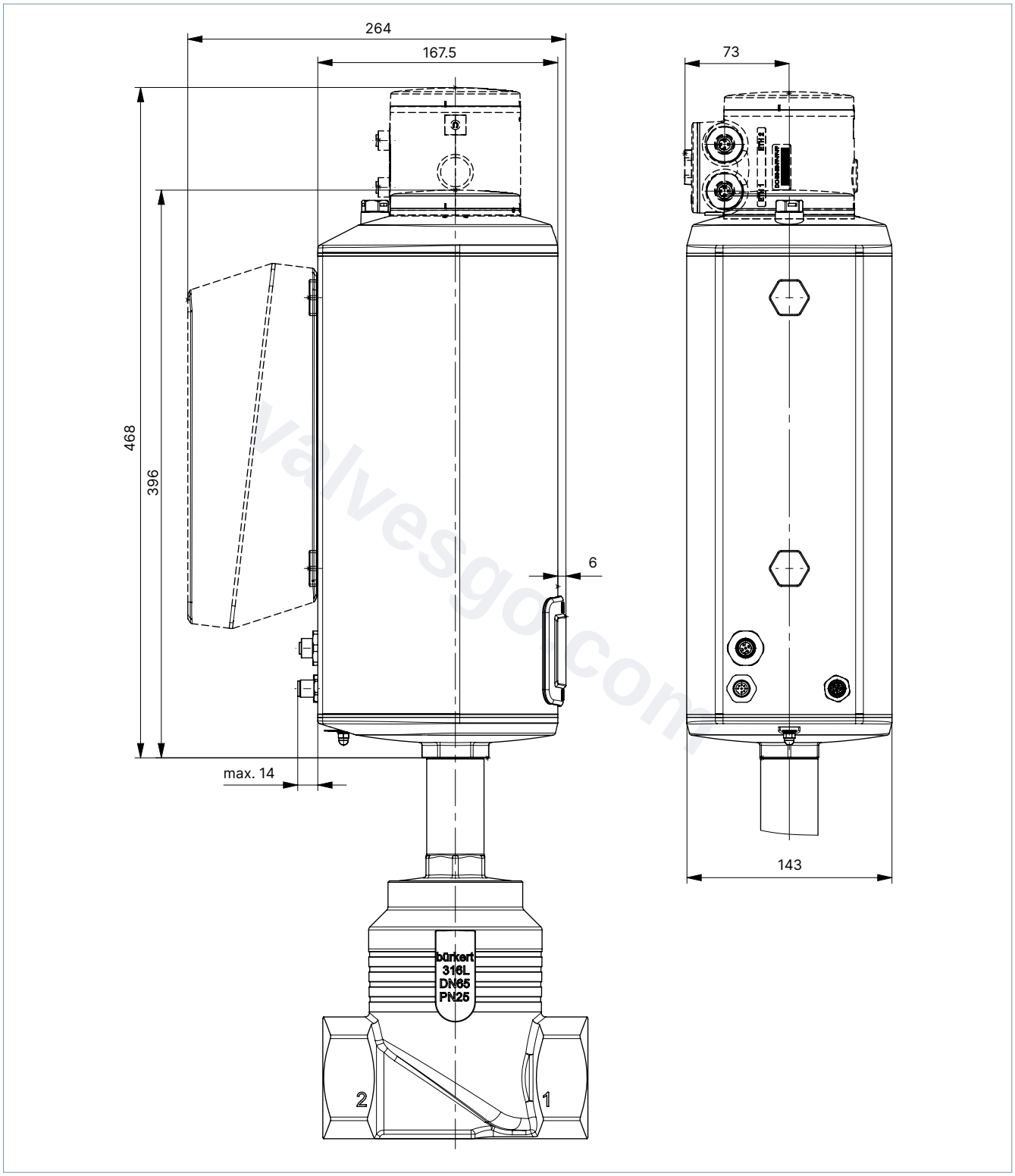

valvesgo.com

DTS 1000273351 EN Version: - Status: RL (released | freigegeben | valide) printed: 28.10.2026

valvesgo.com

DTS 1000273351 EN Version: - Status: RL (released | freigegeben | valide) printed: 28.10.2026

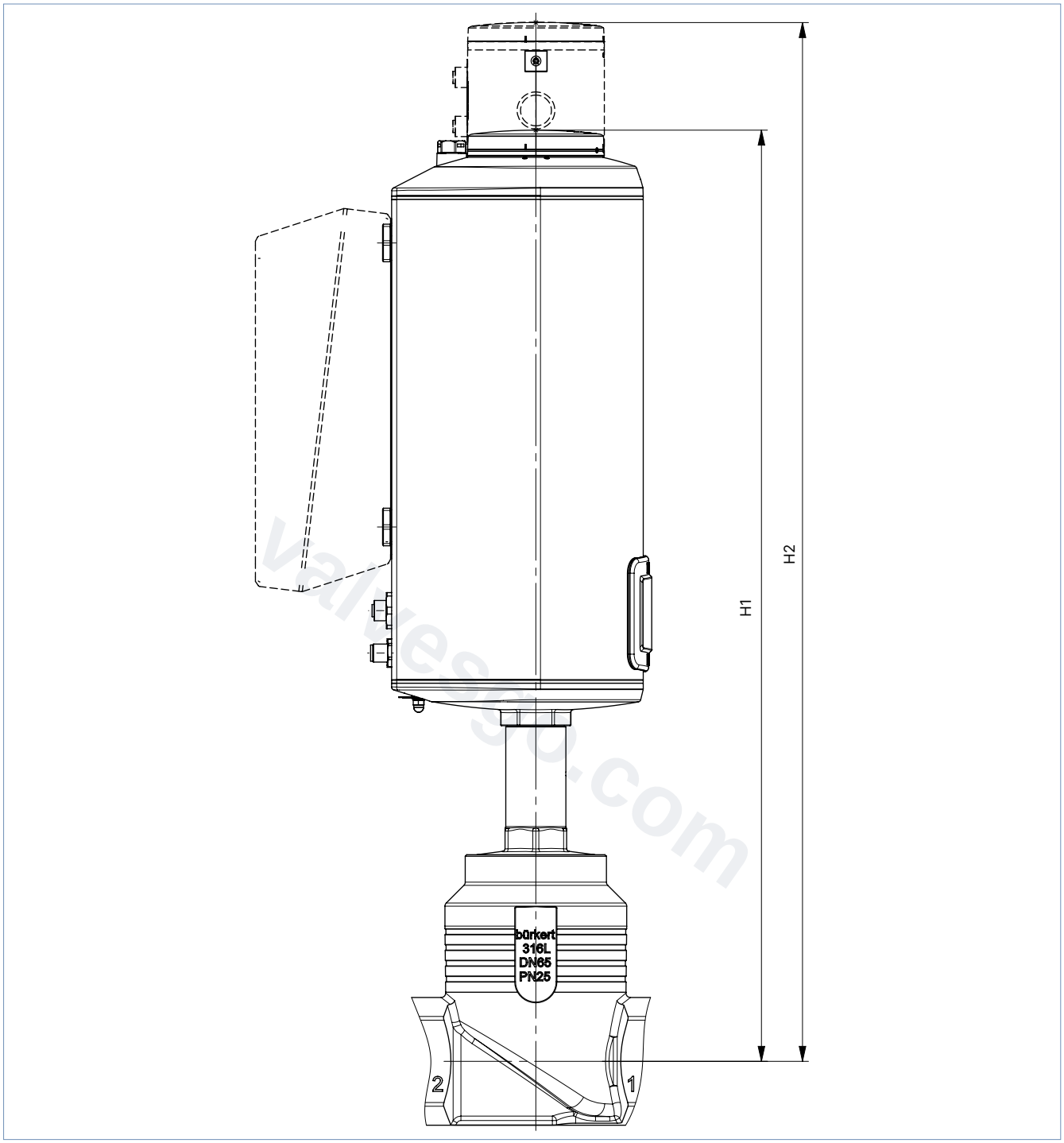

Nominal diameter (port connection)		Height [1.]	
DN	NPS	H1 Standard variant	H2 [2.] Fieldbus variant (KOMM ≠ G, N, L)
40	1½	560	632
50	2	566	638
65	2½	620	692
80	3	628	700
100	4	638	710

1.) Dimensions without sealing function: the actuator is raised by approx. 2 mm in the closed position.
2.) Optional: integrated fieldbus gateway

valvesgo.com

4.2. Body with flange connection

Note:
Dimensions in mm, unless otherwise stated

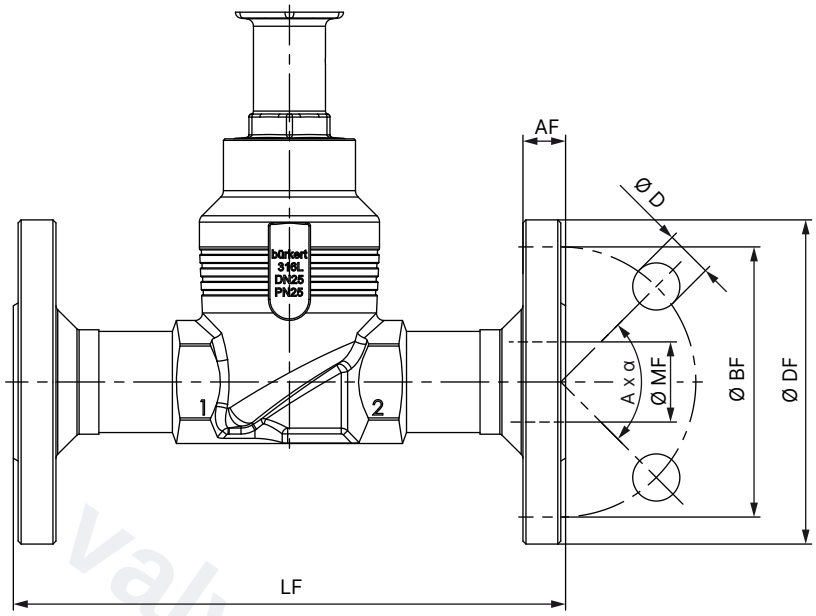

Nominal diameter (port connection)	DIN EN 1092 PN 25 FTF 1 according to DIN EN 558 - 1							JIS 10K FTF 10 according to DIN EN 558 - 2						
DN	Ø DF	LF	Ø BF	AF	Ø D	A x α	Ø MF	Ø DF	LF	Ø BF	AF	Ø D	A x α	Ø MF
10	90	130	60	16	14	4 × 90°	13.6	–	–	–	–	–	–	–
15	95	130	65	16	14	4 × 90°	18.1	95	108	70	12	15	4 × 90°	18.1
20	105	150	75	18	14	4 × 90°	23.7	100	117	75	14	15	4 × 90°	23.7
25	115	160	85	18	14	4 × 90°	29.7	125	127	90	14	19	4 × 90°	29.7
32	140	180	100	18	18	4 × 90°	38.4	135	140	100	16	19	4 × 90°	38.4
40	150	200	110	18	18	4 × 90°	44.3	140	165	105	16	19	4 × 90°	44.3
50	165	230	125	20	18	4 × 90°	56.3	155	203	120	16	19	4 × 90°	56.3
65	185	290	145	22	18	8 × 45°	66.0	175	216	140	18	19	4 × 90°	71.5
80	200	310	160	24	18	8 × 45°	81.0	185	241	150	18	19	8 × 45°	84.3
100	235	350	190	24	22	8 × 45°	100.0	210	292	175	18	19	8 × 45°	109.1

Nominal diameter (port connection)	ANSI B 16.5 Class 150 FTF 37 according to DIN EN 558 - 2						
NPS	Ø DF	LF	Ø BF	AF	Ø D	A x α	Ø MF
½	89	184	60.5	11.2	15.7	4 × 90°	15.7
¾	99	184	69.9	12.7	15.7	4 × 90°	20.8
1	108	184	79.2	14.2	15.7	4 × 90°	26.7
1½	127	222	98.6	17.5	15.7	4 × 90°	40.9
2	152	254	120.7	19.1	19.1	4 × 90°	52.6
2½	178	276	139.7	22.3	19.1	4 × 90°	62.7
3	190	298	152.5	23.9	19.1	4 × 90°	78.0
4	229	352	190.5	23.9	19.1	8 × 45°	102.4

DTS 1000273351 EN Version: - Status: RL (released | freigegeben | valide) printed: 28.10.2026

valvesgo.com

4.3. Body with threaded connection

Note:
Dimensions in mm, unless otherwise stated

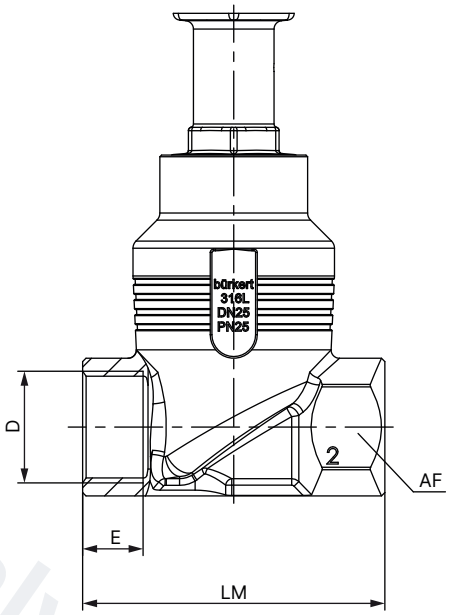

Nominal diameter (port connection)	G (DIN ISO 228 - 1) NPT (ASME B1.20.1) RC (ISO 7 - 1) DIN EN 10226 - 2					
	D	E			LM	AF
DN	NPS	G	NPT	RC		
10	⅜	12	10.3	10.1	65	27
15	½	14	13.7	13.2	65	27
20	¾	16	14	14.5	75	34
25	1	18	16.8	16.8	90	41
32	1¼	20	17.3	19.1	110	50
40	1½	22	17.3	19.1	120	55
50	2	24	17.6	23.4	150	70
65	2½	26	23.7	26.7	185	85
80	3	28	30.5	29.8	205	100
100	4	32	33	35.8	240	125

DTS 1000273351 EN Version: - Status: RL (released | freigegeben | valide) printed: 28.10.2026

valvesgo.com

valvesgo.com

4.4. Body with welded connection

Note:
Dimensions in mm, unless otherwise stated

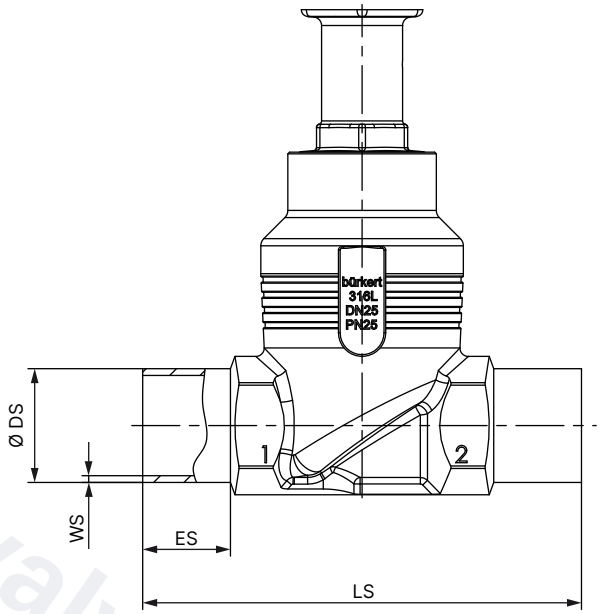

Nominal diameter (port connection)	ES	LS	DIN EN ISO 1127 / ISO 4200 / DIN 11866 series B		DIN 11850 - 2 / DIN 11866 series A / DIN EN 10357 series A	
DN			Ø DS	WS	Ø DS	WS
10	20	90	17.2	1.6	13	1.5
15	20	90	21.3	1.6	19	1.5
20	20	100	26.9	1.6	23	1.5
25	26	130	33.7	2.0	29	1.5
32	26	140	42.4	2.0	35	1.5
40	26	150	48.3	2.0	41	1.5
50	26	175	60.3	2.0	53	1.5
65	26	210	76.1	2.3	70	2.0
80	26	230	88.9	2.3	85	2.0
100	26	260	114.3	2.6	104	2.0

Nominal diameter (port connection)	ES	LS	ASME BPE / DIN 11866 series C	
NPS			Ø DS	WS
½	20	90	12.7	1.65
¾	20	90	19.05	1.65
1	20	100	25.4	1.65
1½	26	140	38.1	1.65
2	26	150	50.8	1.65
2½	26	175	63.5	1.65
3	26	210	76.2	1.65
4	26	260	101.6	2.11

DTS 1000273351 EN Version: - Status: RL (released | freigegeben | valide) printed: 28.10.2026

valvesgo.com

4.5. Body with clamp connection

Note:
Dimensions in mm, unless otherwise stated

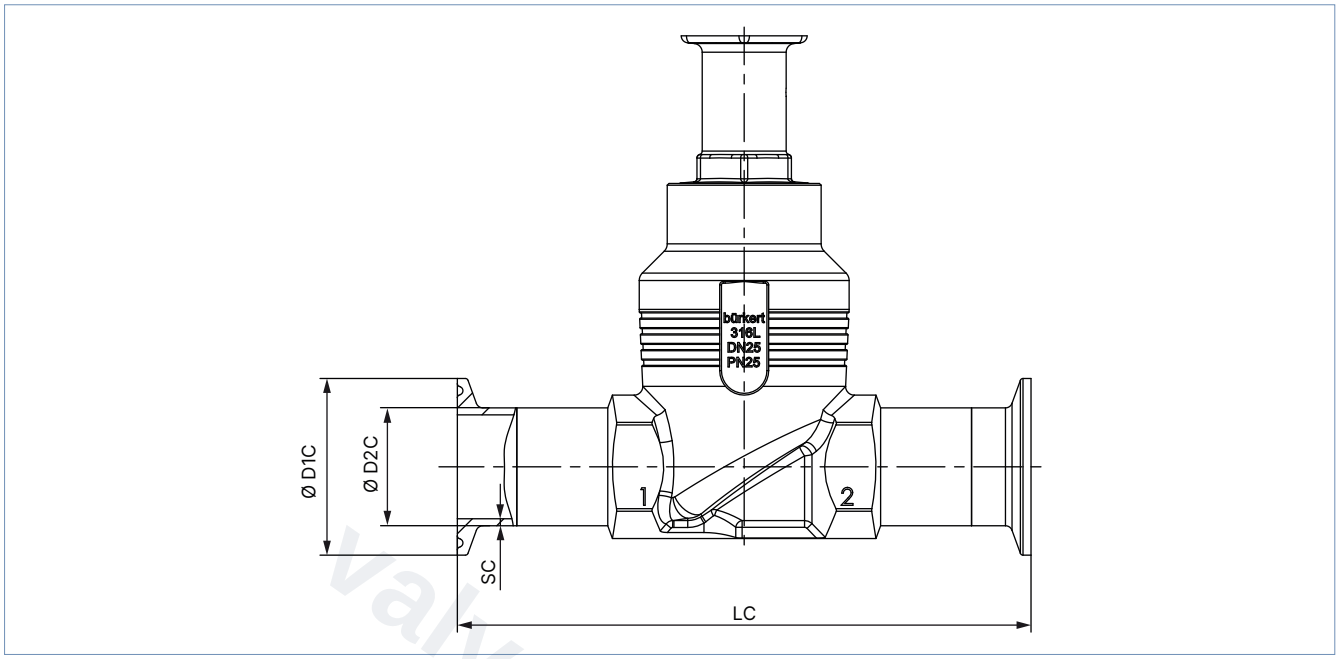

Nominal diameter (port connection)	Clamp: DIN 32676 series A Pipe: DIN 11850 - 2 / DIN 11866 series A / DIN EN 10357 series A				Clamp: DIN 32676 series B Pipe: DIN EN ISO 1127 / ISO 4200 / DIN 11866 series B			
DN	**LC**	**Ø D2 C**	**Ø D1 C**	**SC**	**LC**	**Ø D2 C**	**Ø D1 C**	**SC**
15	126	19	34	1.5	146	21.3	50.5	1.6
20	136	23	34	1.5	136	26.9	50.5	1.6
25	173	29	50.5	1.5	164	33.7	50.5	2.0
32	179	35	50.5	1.5	–	–	–	–
40	193	41	50.5	1.5	193	48.3	64.0	2.0
50	218	53	64	1.5	218	60.3	77.5	2.0
65	266	70	91	2.0	266	76.1	91	2.0
80	–	–	–	–	286	88.9	106	2.3
100	–	–	–	–	316	114.3	130	2.3

Nominal diameter (port connection)	LC	Clamp: ASME BPE / DIN 32676 series C Pipe: ASME BPE / DIN 11866 series C		
NPS		**Ø D2 C**	**Ø D1 C**	**SC**
½	122	12.7	25.0	1.65
¾	126	19.05	25.0	1.65
1	126	25.4	50.5	1.65
1½	172	38.1	50.5	1.65
2	182	50.8	64.0	1.65
2½	231	63.5	77.5	1.65
3	265	76.2	91.0	1.65
4	315	101.6	119.0	2.11

DTS 1000273351 EN Version: - Status: RL (released | freigegeben | valide) printed: 28.10.2026

valvesgo.com

5. Product connections

5.1. Electrical connection

Note:
For the terminal assignment of the connection variant “cable gland with connection terminals”, see **operating instructions Type 3361** ▶.

Description of circular plug-in connectors

AG2 variant

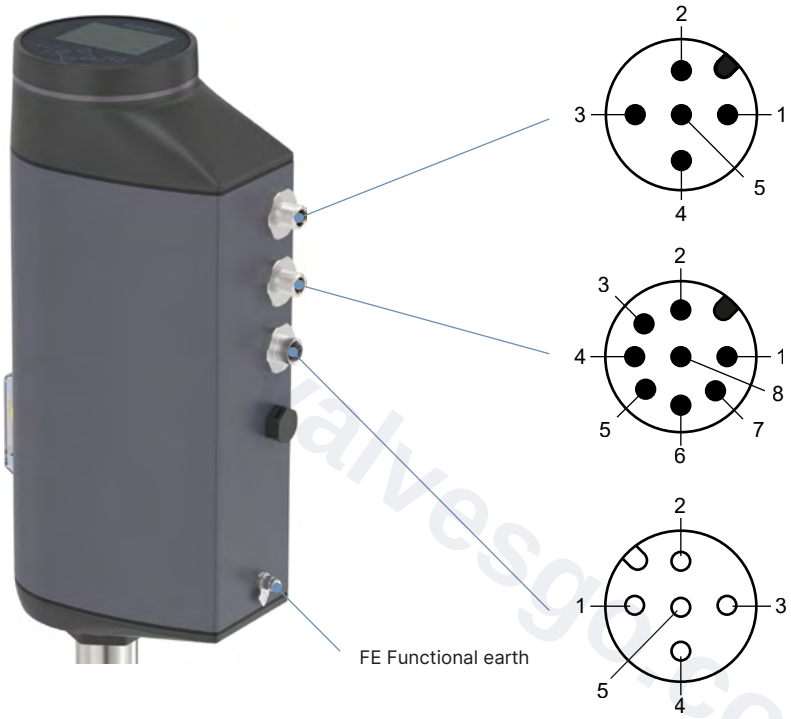

X3 – Circular plug M12, 5-pin, A-coded
Operating voltage AG2 and büS/CANopen

X1 – Circular plug M12, 8-pin, A-coded
Input and output signals

X2 – Circular socket M12, 5-pin, A-coded
Input signals process actual value

valvesgo.com

DTS 1000273351 EN Version: - Status: RL (released | freigegeben | valide) printed: 28.10.2026

valvesgo.com

AG3 variant

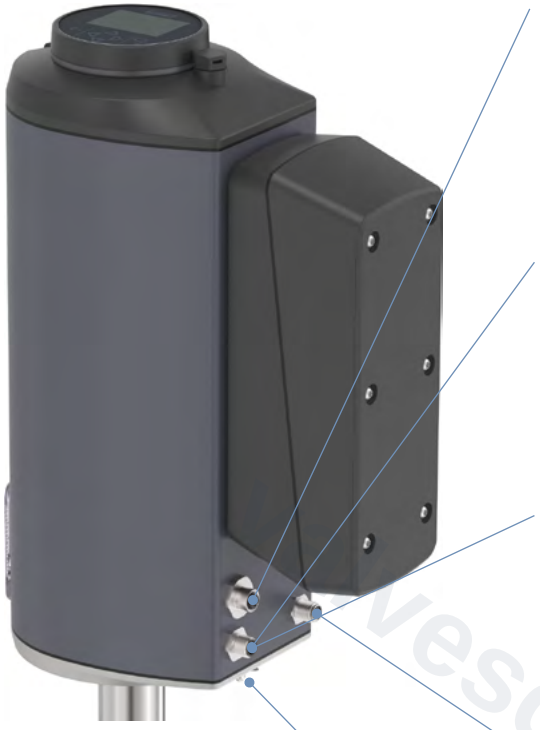

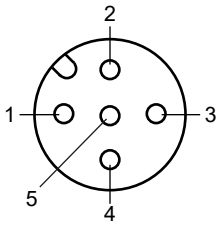

X2 – Circular socket M12, 5-pin, A-coded
Input signals process actual value

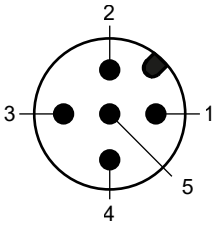

X3 – Circular plug M12, 5-pin, A-coded
büS/CANopen

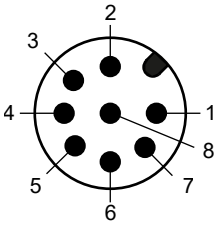

X1 – Circular plug M12, 8-pin, A-coded
Input and output signals

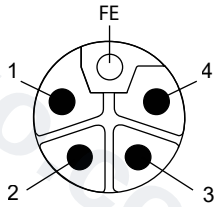

X4 – Circular plug M12, 5-pin, L-coded
Actuator supply AG3

Fieldbus gateway (optional)



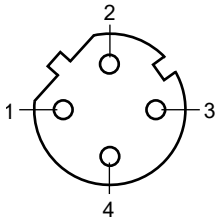

X7 – M12 round socket, 4-pin, D-coded,
fieldbus connection (2-port Ethernet switch)

DTS 1000273351 EN Version: - Status: RL (released | freigegeben | valide) printed: 28.10.2026

valvesgo.com

The following circular plug-in connectors are used depending on the device variant:

Circular plug-in connector	AG2			AG3		
	Electrical variant			Electrical variant		
	Analogue (büS service interface)	With fieldbus gateway	büS/CANopen	Analogue (büS service interface)	With fieldbus gateway	büS/CANopen
	0...10 V 0...5 V 4...20 mA, 0...20 mA adjustable	for EtherNet/IP, PROFINET, Modbus TCP, EtherCAT protocols		0...10 V 0...5 V 4...20 mA 0...20 mA adjustable	for EtherNet/IP, PROFINET, Modbus TCP, EtherCAT protocols	
X1	X	–	–	X	–	–
X2 [1.]	X [1.]	X [1.]	X [1.]	X [1.]	X [1.]	X [1.]
X3	X	X	X	–	X	X
X4	–	–	–	X	X	X
X7	–	X	–	–	X	–

1.) Optional, only for devices with process controller function
X = available
– = not available

valvesgo.com

DTS 1000273351 EN Version: - Status: RL (released | freigegeben | valide) printed: 28.10.2026

valvesgo.com

Circular plug-in connector with pin assignment

Input and output signals

X1 – Circular plug M12, 8-pin, A-coded	Pin	Assignment
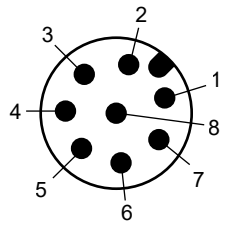	**1**	Digital input +
	2	GND for digital input and digital outputs
	3	Digital output 2 +
	4	Digital output 1 +
	5	Analogue output -
	6	Analogue output +
	7	Set-point value / Analogue input -
	8	Set-point value / Analogue input +

Input signal process actual value (4..20 mA, frequency, PT100) (Only for devices with process controller function)

X2 – Circular socket M12, 5-pin, A-coded	Pin	Assignment for signal type 4..20 mA, sensor supplied externally [1.)]
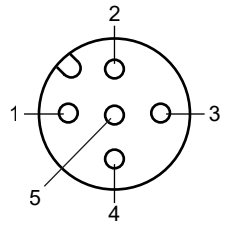	**1**	Do not connect
	2	Do not connect
	3	Do not connect
	4	Process actual value / 4..20 mA
	5	Process actual value / 4..20 mA GND

1.) Further signal types (frequency, PT100) are possible. For further information see **operating instructions Type 3361** ▸.

Operating voltage AG2 and büS/CANopen

X3 – Circular plug M12, 5-pin, A-coded	Pin	Assignment
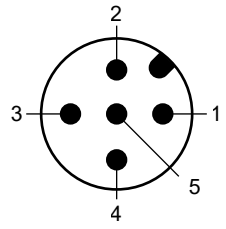	**1**	CAN Shield / shield
	2	Operating voltage 24 V DC ± 10 %
	3	GND / CAN_GND
	4	CAN_H
	5	CAN_L

Operating voltage AG3

X4 – Circular plug M12, 5-pin, L-coded	Pin	Assignment
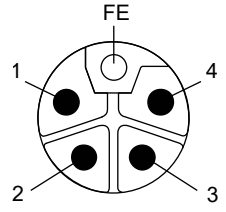	**1**	Operating voltage 24 V DC ± 10 %
	2	Do not connect
	3	GND
	4	Do not connect
	FE	Functional earth, connected to housing

DTS 1000273351 EN Version: - Status: RL (released | freigegeben | valide) printed: 28.10.2026

valvesgo.com

valvesgo.com

Fieldbus connection

X7 – Circular socket M12, 4-pin, D-coded	Pin	Assignment
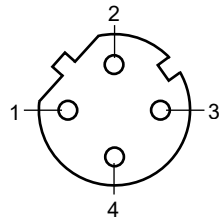	**1**	Transmit +
	2	Receive +
	3	Transmit -
	4	Receive -

valvesgo.com

DTS 1000273351 EN Version: - Status: RL (released | freigegeben | valide) printed: 28.10.2026

valvesgo.com

6. Performance specifications

6.1. Fluidic data

Flow characteristics

- Equal-percentage flow characteristic according to DIN EN 60534 - 2 - 4 (linear characteristic curve on request)
- Theoretical rangeability: K_{VS}/K_{V0} (see "Overview of fluidic data for flow below seat (for liquids, steam and gases)" on page 24)
- K_{VR} value at 5 % of the stroke for seat size > 10
  K_{VR} value at 10 % of the stroke for seat size ≤ 10
- K_{VR} value = lowest K_V value at which the angularity can still be observed according to DIN EN 60534 - 2 - 4.
- The globe control valve has different theoretical rangeabilities depending on the seat size
  (see "Overview of fluidic data for flow below seat (for liquids, steam and gases)" on page 24).

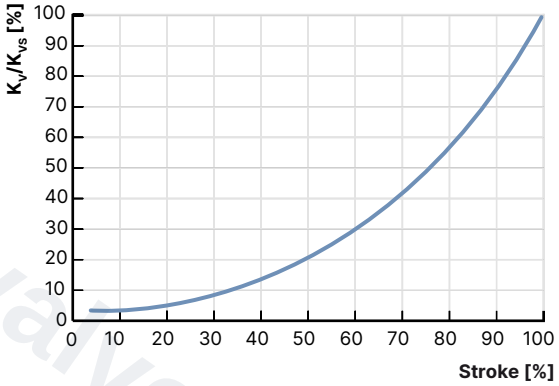

Equal percentage flow curve – detailed values see below

valvesgo.com

DTS 1000273351 EN Version: - Status: RL (released | freigegeben | valide) printed: 28.10.2026

valvesgo.com

bürkert
FLUID CONTROL SYSTEMS

Overview of fluidic data for flow below seat (for liquids, steam and gases)

Note:

- K_V value [m³/h]: measurement with water according to DIN EN 60534 - 2 - 4
- Operating limits see "6.2. Operating limits" on page 26

Nominal diameter (port connection)		Seat size	Actuator force [1]	Max. operating pressure (seat leakage class)			Theoretical rangeability	K_V value at stroke										K_{VS} value
				Seat seal				5 %	10 %	20 %	30 %	40 %	50 %	60 %	70 %	80 %	90 %	100 %
				Stainless steel	PTFE	PEEK												
DN	NPS		[N]	[bar(g)]				[m³/h]										
10	⅜ [2]	3	1300	25 (IV) 40 (IV) [3]	–	–	20:1	–	0.005	0.009	0.013	0.019	0.026	0.034	0.044	0.060	0.077	0.1
		3					20:1	–	0.009	0.015	0.023	0.033	0.046	0.063	0.085	0.11	0.16	0.2
		4					30:1	–	0.023	0.033	0.049	0.070	0.097	0.14	0.18	0.26	0.35	0.5
		6				25 (VI) 40 (VI) [3]	50:1	–	0.007	0.011	0.045	0.085	0.16	0.26	0.41	0.65	1.1	1.25
		8						–	0.070	0.090	0.12	0.18	0.26	0.42	0.61	0.92	1.5	2.0
		10						–	0.11	0.13	0.19	0.30	0.48	0.73	1.0	1.6	2.3	2.7
15	½ [2]	3	1300	25 (IV) 40 (IV) [3]	–	–	20:1	–	0.005	0.009	0.013	0.019	0.026	0.034	0.044	0.060	0.077	0.1
		3					20:1	–	0.009	0.015	0.023	0.033	0.046	0.063	0.085	0.11	0.16	0.2
		4					30:1	–	0.023	0.033	0.049	0.070	0.097	0.14	0.18	0.26	0.35	0.5
		6				25 (VI) 40 (VI) [3]	50:1	–	0.007	0.011	0.045	0.085	0.16	0.26	0.41	0.65	1.1	1.25
		8						–	0.080	0.11	0.13	0.19	0.27	0.43	0.63	0.95	1.6	2.1
		10						–	0.11	0.15	0.19	0.31	0.49	0.75	1.1	1.7	2.5	3.1
		15						0.14	0.17	0.22	0.35	0.52	0.80	1.2	1.8	2.7	3.7	4.3
20	¾ [2]	10	1300	25 (IV) 40 (IV) [3]	–	25 (VI)		–	0.12	0.16	0.20	0.33	0.52	0.77	1.2	1.8	2.6	3.2
		15						0.14	0.17	0.22	0.35	0.52	0.80	1.2	1.8	2.9	4.0	5.2
		20			25 (VI) 40 (VI) [3]			0.20	0.25	0.30	0.45	0.70	1.1	1.6	2.4	3.5	5.2	7.1
25	1	3	1300	25 (IV) 40 (IV) [3]	–	–	20:1	–	0.005	0.009	0.013	0.019	0.026	0.034	0.044	0.060	0.077	0.1
		3					20:1	–	0.009	0.015	0.023	0.033	0.046	0.063	0.085	0.11	0.16	0.2
		4					30:1	–	0.023	0.033	0.049	0.070	0.097	0.14	0.18	0.26	0.35	0.5
		6				25 (VI)	50:1	–	0.007	0.011	0.045	0.085	0.16	0.26	0.41	0.65	1.1	1.25
		8						–	0.080	0.11	0.13	0.19	0.27	0.43	0.63	0.95	1.6	2.1
		10						–	0.12	0.16	0.20	0.33	0.52	0.77	1.2	1.8	2.6	3.2
		15						0.14	0.17	0.22	0.35	0.52	0.80	1.2	1.8	2.9	4.1	5.3
		20			25 (VI) 40 (VI) [3]	20 (VI)		0.20	0.25	0.31	0.47	0.70	1.1	1.6	2.5	3.8	5.4	7.2
		25		25 (IV)	25 (VI)	20 (VI)		0.35	0.38	0.65	1.0	1.5	2.2	3.4	5.1	7.0	9.4	12
32	1¼ [2]	20	1300	25 (IV)	25 (VI)	25 (VI)		0.22	0.25	0.35	0.50	0.70	1.1	1.6	2.5	3.8	5.8	8
		25				20 (VI)		0.40	0.47	0.73	1.1	1.6	2.5	3.7	5.4	7.5	10.3	13
		32		16 (IV)	16 (VI)	10 (VI)		0.48	0.60	0.85	1.3	2.1	3.1	4.5	6.8	10.2	14.0	17.8
			2500	25 (IV)	25 (VI)	20 (VI)												
40	1½ [2]	25	1300	25 (IV)	25 (VI)	20 (VI)		0.40	0.50	0.75	1.1	1.7	2.6	3.8	5.6	8.0	10.7	13.6
		32	1300	16 (IV)	16 (VI)	10 (VI)		0.48	0.60	0.85	1.3	2.1	3.2	4.6	6.9	11.0	15.0	20
			2500	25 (IV)	25 (VI)	20 (VI)												
		40	1300	10 (III)	10 (VI)	6 (VI)		0.60	0.70	1.1	1.7	2.7	4.0	6.0	9.2	13.8	18.2	24
			2500	18 (IV)	18 (VI)	14 (VI)												
			7700	25 (IV)	–	25 (VI)												

DTS 1000273351 EN Version: - Status: RL (released | freigegeben | valide) printed: 28.10.2026

valvesgo.com

valvesgo.com

Nominal diameter (port connection)		Seat size	Actuator force [1]	Max. operating pressure (seat leakage class)			Theoretical rangeability	K_v value at stroke										K_{vs} value
				Seat seal														
				Stainless steel	PTFE	PEEK		5 %	10 %	20 %	30 %	40 %	50 %	60 %	70 %	80 %	90 %	100 %
DN	NPS		[N]	[bar(g)]				[m³/h]										
50	2 [2]	20	1300	25 (20 [4]) (IV)	–	–	50:1	–	0.14	0.25	0.38	0.57	0.85	1.3	1.9	2.8	4.1	6.3
		32	1300	16 (IV)	–	–		–	0.31	0.51	0.76	1.1	1.7	2.5	3.6	5.3	7.9	12
			2500	25 (20 [4]) (IV)														
		32	1300	16 (IV)	16 (VI)	10 (VI)		0.48	0.60	0.90	1.3	2.1	3.2	4.6	6.9	11.6	16.0	21
			2500	25 (20 [4]) (IV)	25 (20 [4]) (VI)	20 (VI)												
		40	1300	10 (III)	10 (VI)	6 (VI)		0.60	0.70	1.0	1.7	2.6	4.0	5.9	9.2	14.0	18.9	24.5
			2500	18 (IV)	18 (VI)	14 (VI)												
			7700	25 (20 [4]) (IV)	–	25 (20 [4]) (VI)												
		50	1300	6 (III)	6 (VI)	–		0.90	1.1	1.9	2.9	4.5	6.8	10.5	15.5	22.0	29.5	37
			2500	10 (III)	10 (VI)	8 (VI)												
			7700	25 (20 [4]) (IV)	–	25 (20 [4]) (VI)												
65	2½ [2]	40	10000	25 (15 [4]) (IV)	–	–		0.45	0.55	0.85	1.3	2	3.1	4.6	6.8	10.7	17.2	25.5
		50						0.75	0.9	1.5	2.3	3.5	4.9	7.1	11.0	17.5	26.0	39.5
		65				25 (15 [4]) (VI)		1.1	1.4	2.1	3.2	4.9	8.0	12.0	18.5	31.5	46.5	62
80	3 [2]	50		25 (12.5 [4]) (IV)	–	–		0.85	1.0	1.5	2.3	3.5	5.0	7.1	10.5	16.0	25.0	42
		65				25 (12.5 [4]) (VI)		1.4	1.7	2.5	3.8	5.7	8.2	12.2	19.5	32.5	50	70
		80		21 (12.5 [4]) (IV)	21 (12.5 [4]) (VI)	17 (12.5 [4]) (VI)		2.1	2.6	4.2	7.0	10.5	16.0	25.0	40.0	60	83	100
100	4	65		25 (10 [4]) (IV)	–	25 (10 [4]) (VI)		1.4	1.7	2.6	3.8	5.7	8.3	12.6	20.0	32.0	51	75
		80		21 (10 [4]) (IV)	21 (10 [4]) (VI)	17 (10 [4]) (VI)		2.1	2.6	4.3	7.0	11.0	17.0	26.5	44.0	65	89	115
		100		13.5 (10 [4]) (III)	13.5 (10 [4]) (VI)	10.5 (10 [4]) (VI)		3.2	3.9	5.7	9.0	13.5	20.5	32.0	51	83	118	140

1.) AG2: actuator size 2 with a nominal force of 1300 or 2500 N
AG3: actuator size 3 with a nominal force of 7700 or 10000 N

2.) Deviation for port connections according to ASME BPE: the nominal diameter (port connection) next in size is used, e.g. NPS 1 instead of NPS ¾.

3.) Only for valve bodies with nominal pressure PN 40 (optional)

4) In accordance with the Pressure Equipment Directive 97/23/EC for compressible fluids of group 1 (dangerous gases and vapours in accordance with Article 3(1.3)(a), first indent)

DTS 1000273351 EN Version: - Status: RL (released | freigegeben | valide) printed: 28.10.2026

valvesgo.com

valvesgo.com

6.2. Operating limits

Note:
For device variants with approvals or conformities, deviating technical operating limits (temperature, pressure) may apply. Refer to the corresponding approval-related documentation.

Operating limits for medium temperature and operating pressure

In addition to the maximum operating pressures, the application range of Bürkert process valves is limited by the nominal pressure in accordance with the relevant standard.

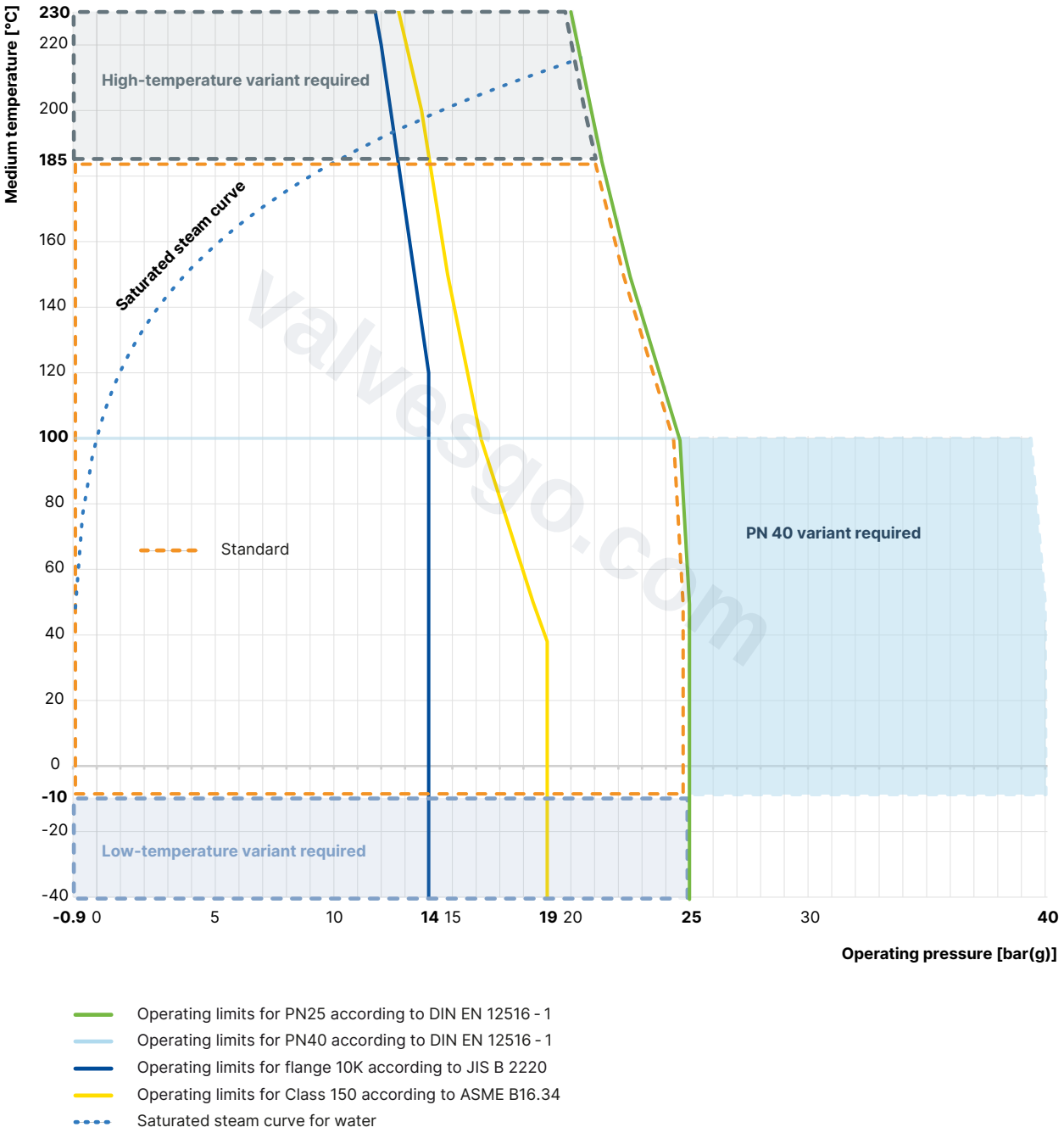

DTS 1000273351 EN Version: - Status: RL (released | freigegeben | valide) printed: 28.10.2026

valvesgo.com

Operating limits for ambient and medium temperature

The maximum permissible temperature for the environment and the medium are dependent on each other. The maximum allowable temperature curves of different device variants are shown in the temperature chart. The curves were determined for maximum operating conditions (maximum operating pressure and motor power). For deviating operating conditions an individual verification can be carried out. Contact your Bürkert sales department for more information.

AG2

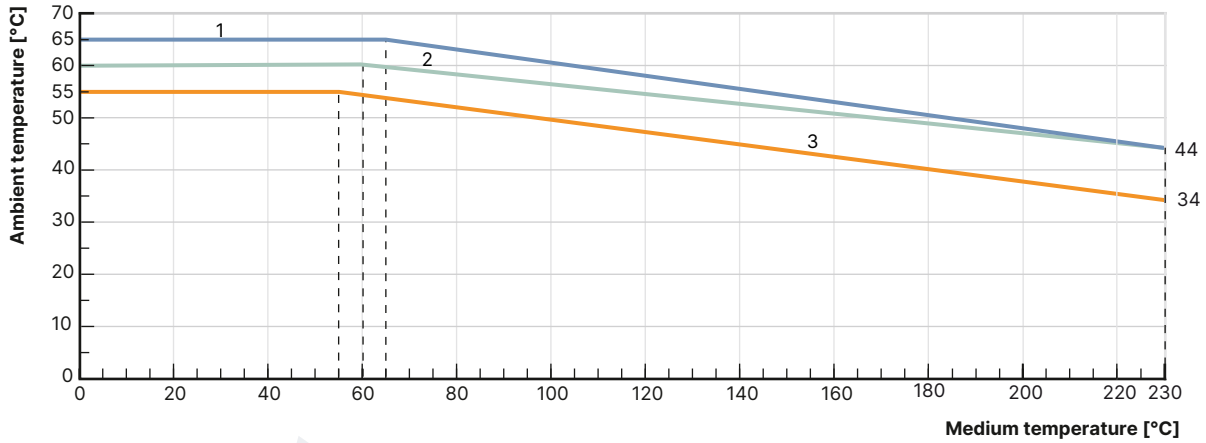

No.	Description
1	Devices without module
2	Devices with display
3	Devices with energy storage SAFEPOS energy-pack or fieldbus gateway, with/without display module

AG3

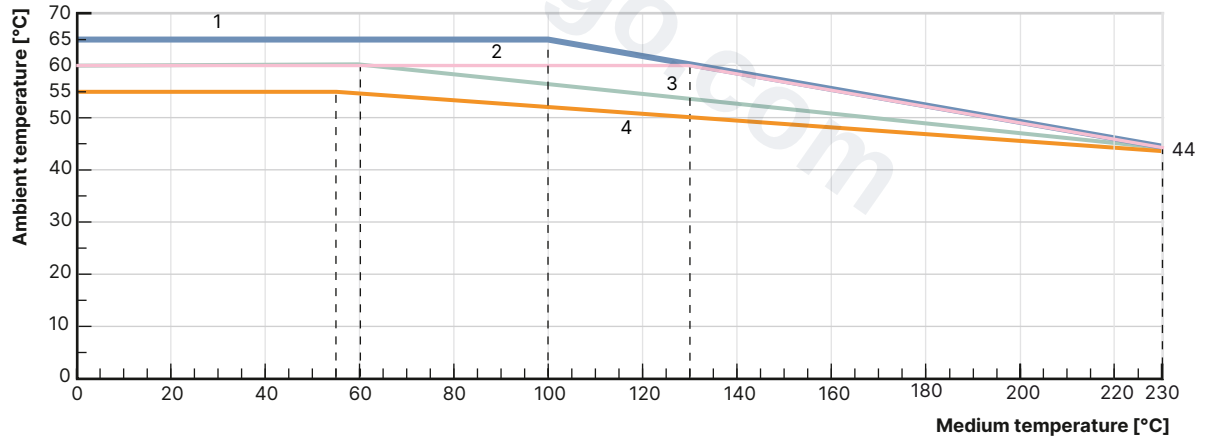

No.	Description
1	Devices without module
2	Devices with energy storage SAFEPOS energy-pack
3	Devices with display module with/without energy storage SAFEPOS energy-pack
4	Devices with fieldbus gateway with/without display module with/without energy storage SAFEPOS energy-pack

DTS 1000273351 EN Version: - Status: RL (released | freigegeben | valide) printed: 28.10.2026

valvesgo.com

Operating limits for seat seal

Tight sealing required	Leakage class (DIN EN 60534 - 4)	Medium temperature	Seat seal
No An additional shut-off valve is recommended.	III/IV (metal seals) Metal-sealed valves have larger leakages (0.1 % or 0.01 % of the nominal flow rate are permissible). Metallic seals are impervious even under demanding process conditions.	- 40 °C...+ 230 °C	Stainless steel
	For particularly demanding process conditions such as cavitation, erosion by wet steam or abrasive media, hardened cones and seats can be used to significantly increase the service life.		Hardened stainless steel
Yes An additional shut-off valve is often unnecessary.	VI (soft seals) By using plastics as sealing material, the control valves can close tightly. Their use is not recommended in cases of increased erosion due to demanding process conditions.	- 40 °C...+ 130 °C (recommended for ≤ + 130 °C)	PTFE
		- 10 °C...+ 230 °C (recommended for > + 130 °C)	PEEK

Operating limits for optional variants

High-temperature variant
Thanks to an adaption of the spindle seal, this variant is suitable for applications with steam, neutral gases and other heat transfer mediums up to + 230 °C.

Drinking water variant
Wetted materials are tested in contact with the medium are tested for suitability with drinking water up to + 85 °C.

Vacuum variant
Without leakage bore, this design is suitable for pressures down to - 0.9 bar(g).

Low-temperature variant
Suitable for minimum medium temperatures down to - 40 °C.

Oxygen variant
Non-metallic wetted materials are tested for suitability with oxygen and are suitable for operating pressures up to 25 bar(g) and medium temperatures up to + 60 °C. Optional variant for operating pressures up to 40 bar(g) and media temperatures up to + 100 °C on request.

Hydrogen variant
Wetted materials are tested for suitability with hydrogen and are suitable for operating pressures up to 40 bar(g) and medium temperatures up to + 100 °C.

The hydrogen variant of Type 3361 is tested for an external tightness (stem seal and body seal) totalling 10^{*-6} mbar*l/s at 40 bar, + 20 °C helium and $2.78 \times 10^{*-3}$ mbar*l/s at 40 bar, - 10 °C/+ 100 °C hydrogen. An external leak-tightness of 10^{-4} mbar*l/s is ensured when delivered.

DTS 1000273351 EN Version: - Status: RL (released | freigegeben | valide) printed: 28.10.2026

valvesgo.com

6.3. Electrical control and interfaces

Interface diagram

The position of the actuator is regulated according to the position set-point value. The position set-point value is specified either by an external standard signal or via a fieldbus (digital).

Analogue control
For analogue control, 2 variants are available for each the inputs and outputs and the connection interface.

Inputs and outputs:

- 1 analogue input, 1 digital input
- 1 analogue input, 1 digital input, 1 analogue output, 2 digital output (optional)
- 1 analogue input process actual value (for optional variant with process controller)

Interface:

- Cable gland with connection terminals (only AG2)
- M12 circular plug-in connectors (optional)

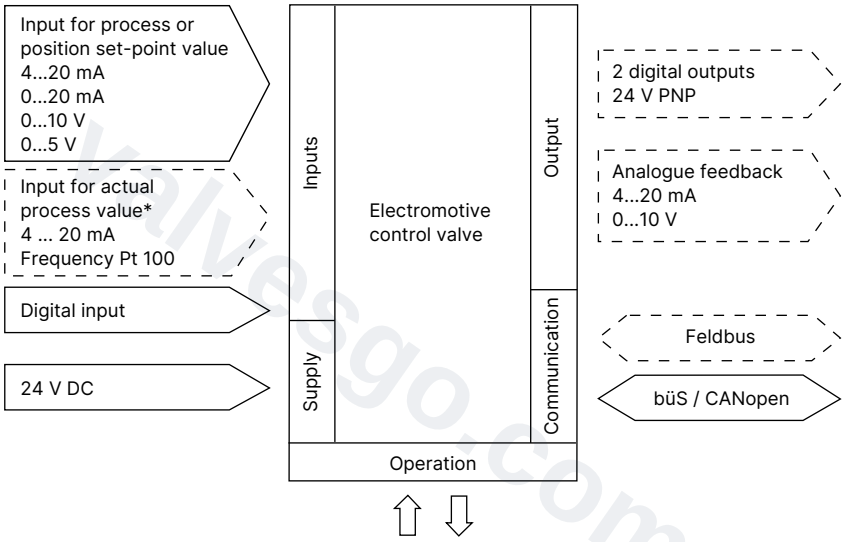

Note: Optional outputs are represented with a broken line

Control data	
Analogue input set-point value	Galvanically isolated from the supply voltage and analogue output 0/4...20 mA (input resistance 70 Ω) 0...5/10 V (input resistance 22 kΩ)
Analogue output	Maximum current 10 mA (for voltage output 0...5/10 V) Load 0...800 Ω (for current output 0/4...20 mA)
Digital input	0...5 V = log „0“, 10...30 V = log „1“, inverted input reversed accordingly
Digital output	PNP, current limitation 100 mA
Analogue input actual value (optional)	
4...20 mA	Input resistance: 80 Ω Resolution: 12 bit
Frequency	Measuring range: up to 1000 Hz Input resistance: > 30 kΩ Resolution: 0.1 % of measurement value Input signal: > 300 mVss Signal form: sine, rectangle, triangle
Pt 100	Measuring range: - 20 °C...+ 220 °C Resolution: 0.01 °C Measurement current: 1 mA
Communication	
Communication interface (büS)	Connection to PC via USB büS interface set
Communication software (büS)	Bürkert Communicator, see **Type 8920** ▶

DTS 1000273351 EN Version: - Status: RL (released | freigegeben | valide) printed: 28.10.2026

valvesgo.com

7. Product design and assembly

7.1. Product features

Note
Further information can be found in the **operating instructions Type 3361** ▶.

User interface	
Device without display module The basic functions are operated by 4 DIP switches and 2 push buttons. These are located under the blind cover which can be removed manually by turning. Through the büS service interface, the device can also be configured in detail with the Bürkert Communicator software. For this, the optional USB-büS interface set is required (see "8.4. Ordering chart accessories" on page 36).	**Blind cover dismantled** 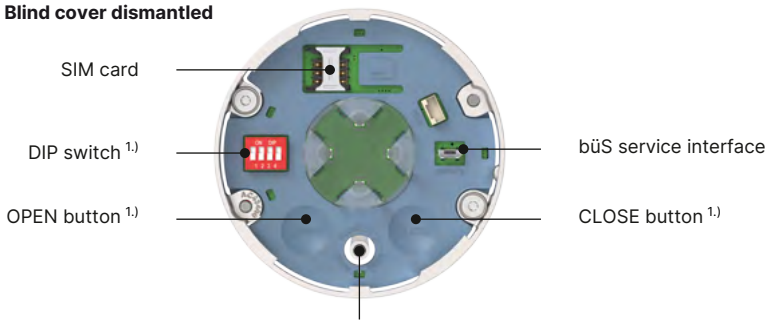 1.) Non-functional in devices with display module. The display must be used for operation.
Device with display module (option) The robust display module is easy to use, it configures and displays all the required functions. In addition to the start screen you can also switch to the configuration view and user-specified views as needed. The display cannot be retrofitted in the field.	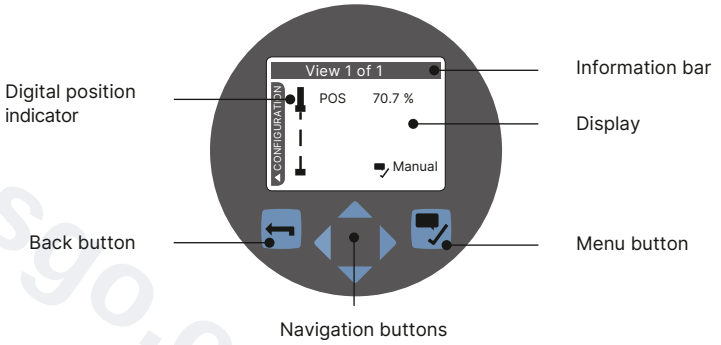
Actuation	
Mechanical manual override The manual override for mechanical movement of the valve is located for AG2 under the blind cover or display module and for AG3 under the pressure compensation element. It ensures that the actuator can be operated even if the power supply fails.	Mechanical manual override AG2 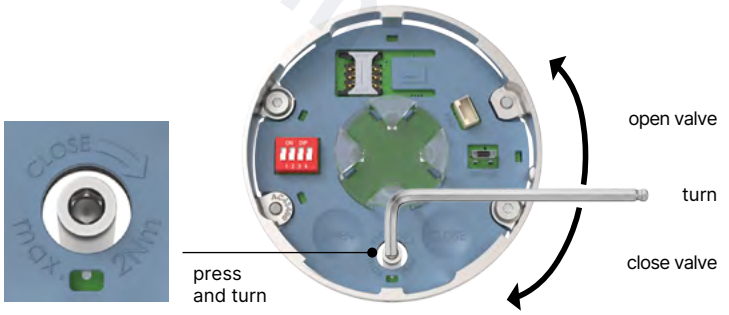
Electrical manual override The electrical manual override for the procedure is carried out via two buttons under the blind cover or via the operating buttons on devices with a display module.	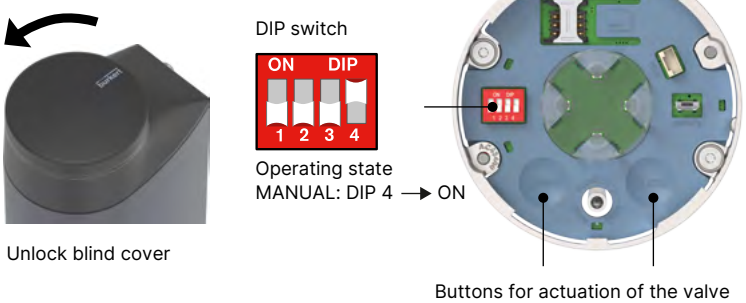

DTS 1000273351 EN Version: - Status: RL (released | freigegeben | valide) printed: 28.10.2026

valvesgo.com

Display elements

Display 360° LED light ring
A clearly visible 360° LED ring is attached to the blind cover or display module to indicate the device status, the valve end position and the operating state.
The LED light ring lights up, blinks or flashes in one or changing colours, depending on the LED mode set.

Mechanical position indicator:
The mechanical position indicator shows the current valve position even if the supply voltage fails.

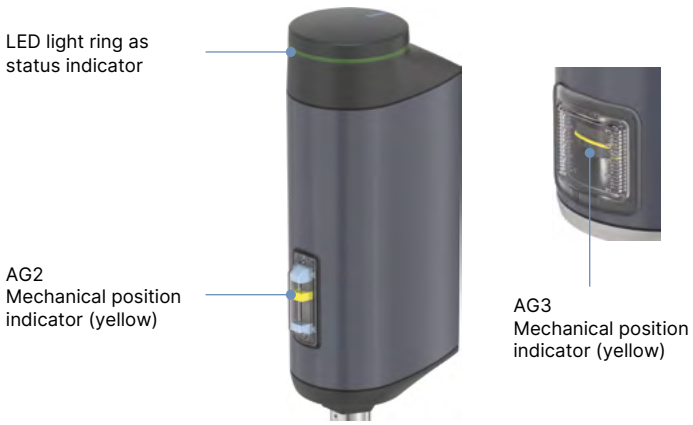

Data transmission (optional)

SIM card (optional)
With the optionally available SIM card, device-specific values and user settings can be stored and quickly transferred to another device.

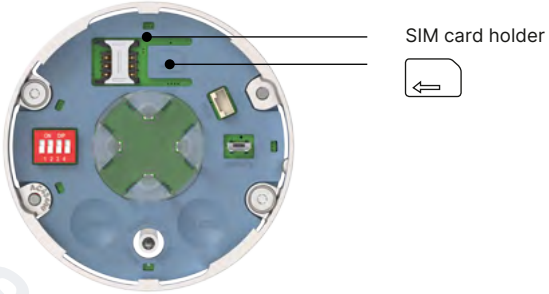

büS service interface
The büS service interface connects the device with the Bürkert Communicator software on a PC, laptop or smartphone. From there a configuration of the device or error diagnosis can be carried out.

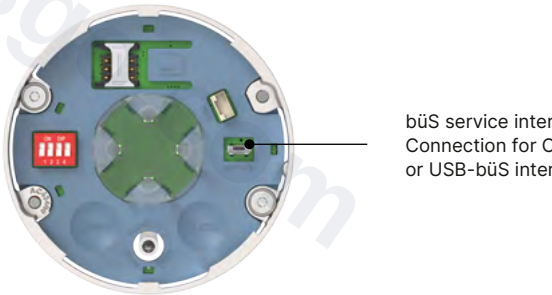

Safety position via energy storage (optional)

The safety starting positions in case of power interruption is realised with the optional energy storage SAFEPOS energy-pack. The desired position is set via the menu. In addition to the end positions (open/closed), any desired intermediate position can be defined here. The energy storage has a lifespan of up to 10 years, depending on the operating conditions. The power of the energy storage is monitored and a warning is displayed to indicate its service life is coming to an end. The storage device is designed as a plug-in module to facilitate replacement. Without energy storage, the valve remains in the last position it was in.

The energy storage device is fully charged and ready for operation after a maximum of 120 seconds (depending on the operating conditions).

The energy storage device cannot be retrofitted in the field.



DTS 1000273351 EN Version: - Status: RL (released | freigegeben | valide) printed: 28.10.2026

valvesgo.com

Fieldbus: EtherNet/IP, PROFINET, Modbus TCP, EtherCAT (optional)	
The fieldbus gateway for EtherNet/IP, PROFINET, Modbus TCP and EtherCAT is integrated in an additional module. It has 2 fieldbus connections with 4-pin M12 circular sockets. The interfaces for the fieldbus connection and the status LEDs are located under the gateway housing cover. If there is a need for it to be included in a network, the Ethernet configuration can be performed via the web server. The gateway cannot be retrofitted in the field.	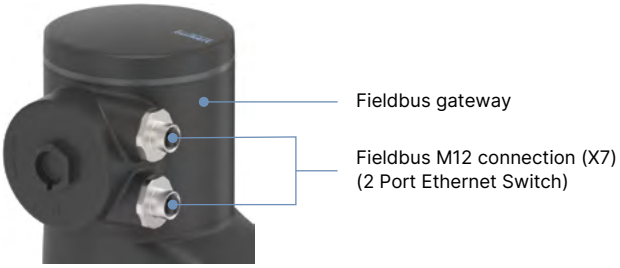

valvesgo.com

DTS 1000273351 EN Version: - Status: RL (released | freigegeben | valide) printed: 28.10.2026

valvesgo.com

7.2. Product assembly

The electromotive linear drive consists of a brushless DC motor, a gear and a spindle system that transfers the force to the closing element. The integrated electronics are controlled either by standard signals or via a fieldbus (digital). A positioner and a process controller are available as controller variants. The electromotive linear actuator is designed to provide optimum efficiency. At the same time, it keeps the valve tight and in position even at the maximum specified medium pressure in a powerless standstill. The optional energy storage device SAFEPOS energy-pack is available for the device. If the supply voltage fails, it supplies the actuator with the energy required to move the valve into the desired position, which can be set in the menu.

The valve position can be changed manually in 2 ways. Either via the electrical manual control or via a mechanical manual override if no supply voltage is available. The device can be set and operated either via 2 capacitive keys switches or, optionally, on a display with touch screen. Additionally, you can always operate the device via the büS service interface and using the Bürkert Communicator software.

The intelligent process valve Type 3361 offers the operator options for process monitoring, valve diagnosis and preventive maintenance. Internal measurements of the operating state are evaluated and, if necessary, issued as a warning or error message. They signal, for example, impermissible ambient and process conditions, functional deviations of components or the status of the energy storage device. A special feature of the globe control valve is the screwed-in valve seat which can be replaced to reduce the seat size.

Design of electromotive valve Type 3361 AG2

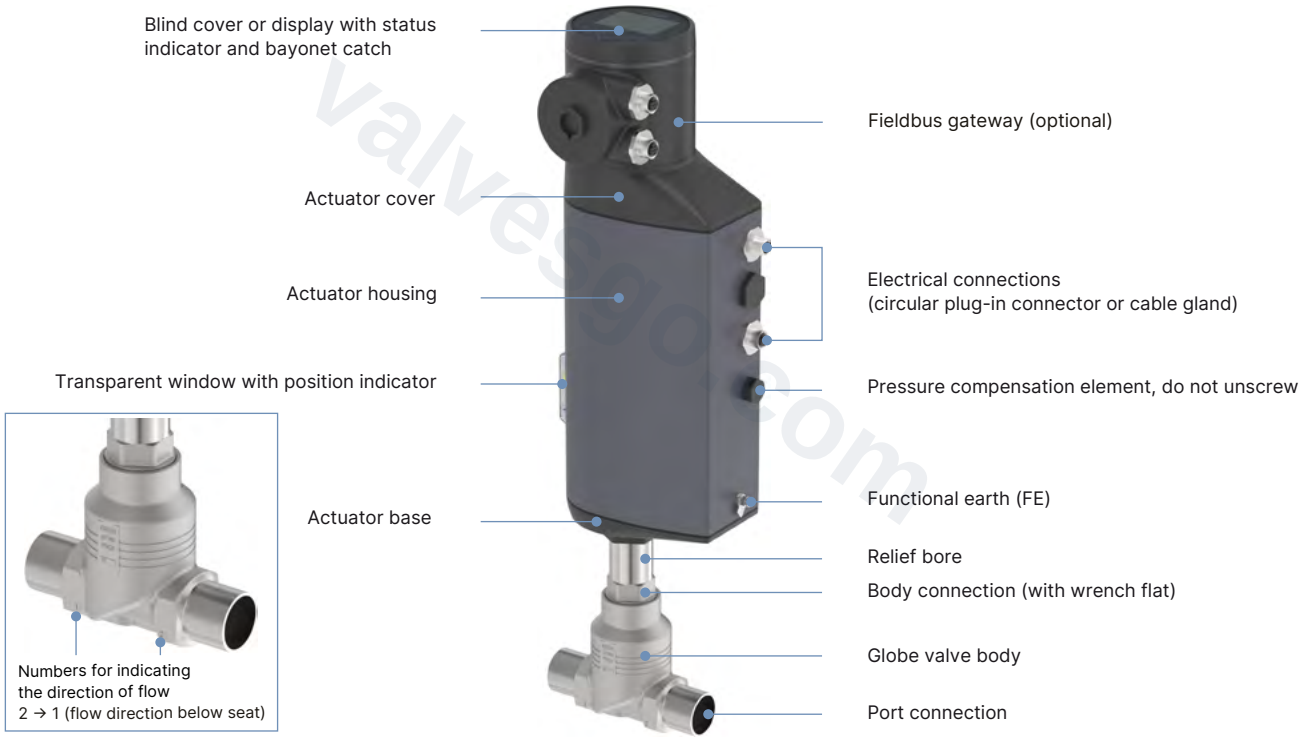

valvesgo.com

DTS 1000273351 EN Version: - Status: RL (released | freigegeben | valide) printed: 28.10.2026

valvesgo.com

Design of electromotive valve Type 3361 AG3

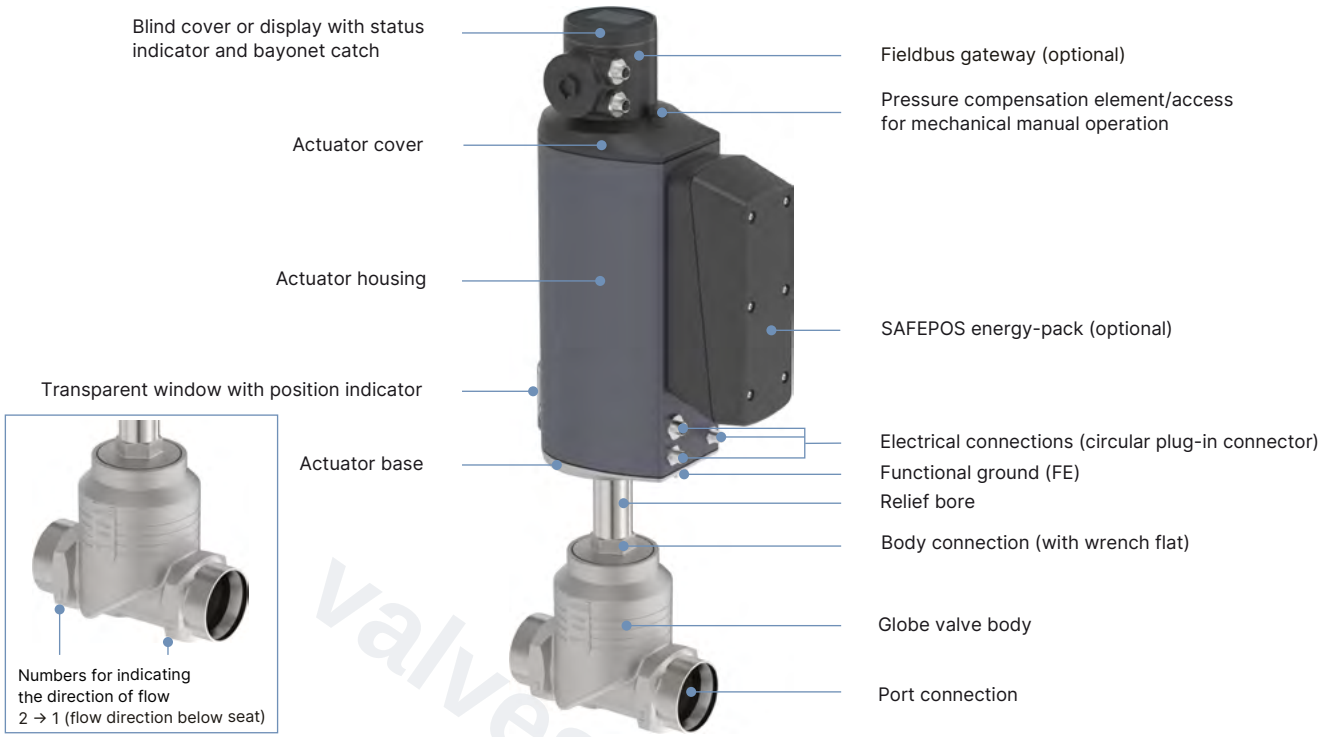

Integrated position controller

The position of the actuator (stroke) is controlled according to the position set-point value. The position set-point value is either given by an external standard signal (analogue) or via a fieldbus (digital). The displacement transducer records the actual position (POS) of the electric linear actuator. The positioner compares the actual position value with the position set-point value (CMD) specified as standard signal. If there is a system deviation (Xd1), the electric motor drive is controlled via the actuating variable CTRL and the actual position value is changed accordingly.

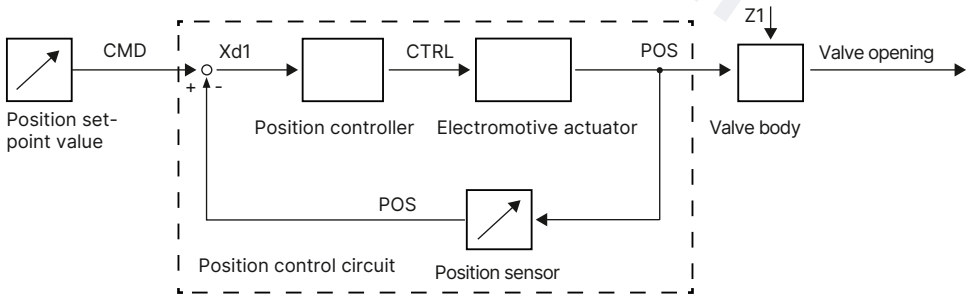

Integrated process controller (optional)

The additionally implemented PID controller allows process control. The set-point position of the valve is calculated from the external signal (e.g. level, pressure, flow rate, temperature) for the process set-point and the actual process value via the control parameters (PID controller).

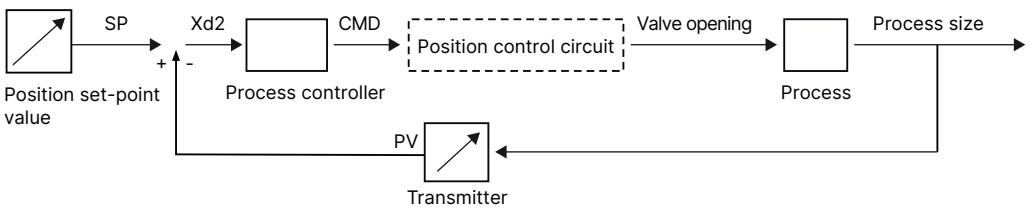

DTS 1000273351 EN Version: - Status: RL (released | freigegeben | valide) printed: 28.10.2026

valvesgo.com

8. Ordering information

8.1. Bürkert eShop



Bürkert eShop – Easy ordering and quick delivery

You want to find your desired Bürkert product or spare part quickly and order directly? Our online shop is available for you 24/7. Sign up and enjoy all the benefits.

Order online now

8.2. Bürkert product filter



Bürkert product filter – Get quickly to the right product

You want to select products comfortably based on your technical requirements?
Use the Bürkert product filter and find suitable articles for your application quickly and easily.

Try out our product filter

8.3. Bürkert Product Enquiry Form

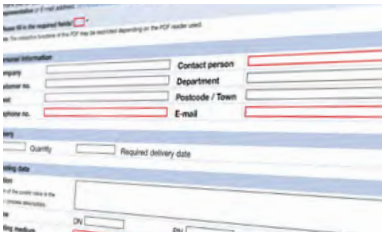

Bürkert Product Enquiry Form – Your enquiry quickly and compactly

Would you like to make a specific product enquiry based on your technical requirements? Use our Product Enquiry Form for this purpose. There you will find all the relevant information for your Bürkert contact. This will enable us to provide you with the best possible advice.

Fill out the form now

DTS 1000273351 EN Version: - Status: RL (released | freigegeben | valide) printed: 28.10.2026

valvesgo.com

8.4. Ordering chart accessories

Note:
For device variants with approvals or conformities, additional accessories may be required for intended use. Refer to the relevant approval documentation.

Standard accessories

Description	Article no.
SIM card for data transmission between units	291773
Holding device for port connection DN 15...20	693770
Holding device for port connection DN 25...50	693771
Blind cover made of plastic	277881
Wearing part energy storage SAFEPOS energy-pack (AG2)	285834
Wearing part energy storage SAFEPOS energy-pack (AG3)	20046438

Connection cable

Note:
For connection to a büS/CANopen network see „Supplement | Cabling guide büS/EDIP" on our website under „User Manuals", **Type 3361** ▶.

Description	Article no.
M12 circular socket with cable, 4-pin, A-coded, cable length: 5 m, for X3, operating voltage AG2 (without communication)	918038
M12 circular socket with cable, 5-pin, L-coded, cable length: 5 m, for X4, operating voltage AG3 (without communication)	20010840
M12 circular socket with cable, 8-pin, A-coded, cable length: 2 m, for X1, input and output signals	919061
M12 circular plug with cable (shielded), 5-pin, A-coded, cable length: 2 m, for X2, input signals process actual value (only for variant with process controller)	559177
M12 circular plug with cable, 4-pin, D-coded to M12 straight plug, cable length: 5 m, for X7, fieldbus connection	775043
M12 circular plug with cable, 4-pin, D-coded to RJ45 plug, cable length: 5 m, for X7, fieldbus connection	775053

büS interface

Note:
- For connection to a büS/CANopen network see „Supplement | Cabling guide büS/EDIP" on our website under „User Manuals", **Type 3361** ▶.
- Detailed charts of accessories can be found in the cabling guide, see „Supplement | Cabling guide büS/EDIP" on our website under „User Manuals", **Type 3361** ▶.

Description	Article no.
Bürkert Communicator software, Type 8920	**Type 8920** ▶
USB-büS interface set 1 (Type 8923)	772426
USB-büS interface set 2 (Type 8923)	772551
büS adapter for büS service interface (M12 on büS service interface micro USB), cable length: 0.3 mm	774931

DTS 1000273351 EN Version: - Status: RL (released | freigegeben | valide) printed: 28.10.2026

valvesgo.com