bürkert
FLUID CONTROL SYSTEMS

Type 3360, 3361, AE3360, AE3361

Electromotive control valve



valvesgo.com

Service Manual

MAN 1000274528 EN Version: C Status: RL (released | freigegeben) printed: 18.07.2026

valvesgo.com

MAN 1000274528 EN Version: C Status: RL (released | freigegeben) printed: 18.07.2026

valvesgo.com

We reserve the right to make technical changes without notice.
Technische Änderungen vorbehalten.
Sous réserve de modifications techniques.

© Bürkert Werke GmbH & Co. KG, 2015 - 2019

Service Manual 1903/02_EU-EN_00810485 / Original DE

Content

1 THE SERVICE INSTRUCTIONS 6

1.1 Symbols 6

1.2 Definitions of terms 6

2 BASIC SAFETY INSTRUCTIONS 7

3 GENERAL INFORMATION 9

3.1 Contact addresses 9

3.2 Warranty 9

3.3 Information on the Internet 9

3.4 Auxiliary materials 9

4 OVERVIEW OF SPARE PARTS 10

4.1 Replacement part sets for Type 3360 10

4.2 Replacement part sets for Type 3361 11

4.3 Spare parts for Types 3360 and 3361 12

5 REPLACING THE CONTROL CONE 13

5.1 Required work steps 13

5.2 Required tools and equipment 13

5.3 Replace control cone 14

6 REPLACING THE SEAL SET 16

6.1 Required work steps 16

6.2 Required tools and equipment 16

6.3 Remove control cone 17

6.4 Replace packing gland, sizes DN 10 – DN 15, seat sizes 3 – 10 or vacuum version 18

6.5 Replace packing gland, sizes DN 20 – DN 50, seat sizes 20 – 50 20

6.6 Mount control cone 22

7 REPLACING THE VALVE SEAT 23

7.1 Required work steps 23

7.2 Required tools and equipment 23

7.3 Replace valve seat 24

MAN 1000274528 EN Version: C Status: RL (released | freigegeben) printed: 18.07.2026

valvesgo.com

valvesgo.com

8 SETTING OPERATING STATE 26
8.1 Setting operating state for devices without display module 26
8.2 Setting operating state for devices with display module 27
9 MANUAL ACTUATION OF THE VALVE 28
9.1 Electrically actuating valve for devices without display module 28
9.2 Electrically actuating valve for devices without display module 29
9.3 Mechanical actuation of the valve 30
9.3.1 Required work steps 30
9.3.2 Required tool 30
9.3.3 Removing dummy cover or display module 31
9.3.4 Removing the fieldbus gateway from the actuator 31
9.3.5 Actuating valve mechanically 32
9.3.6 Mounting the fieldbus gateway on the actuator 33
9.3.7 Closing the dummy cover or display module 34
10 REMOVING OF THE ACTUATOR 35
10.1 Required work steps 35
10.2 Required tools 35
10.3 Remove actuator from valve body 35
11 MOUNTING ACTUATOR ON VALVE BODY 37
12 ADJUSTING THE POSITION CONTROL – RUNNING X.TUNE 39
12.1 Adjustment the position control using the buttons in the device 39
12.2 Adjustment position control on the PC or display of the device 40
13 REPLACEMENT OF THE ENERGY PACK 41
13.1 Required work steps 41
13.2 Required tools and equipment 41
13.3 Opening the actuator housing for device without fieldbus gateway 42
13.4 Opening the actuator housing for device with fieldbus gateway 44
13.5 Replacing the SAFEPOS energy-pack 46
13.6 Closing the actuator housing for device without fieldbus gateway 47
13.7 Closing the actuator housing for device with fieldbus gateway 49

MAN 1000274528 EN Version: C Status: RL (released | freigegeben) printed: 18.07.2026

Valvesgo.com

14 ACCESSORIES, SPARE PARTS 51

14.1 Communications software 52

14.1.1 USB interface 52

14.2 Spare parts 53

14.2.1 Spare parts for control valves of Types 3360 and 3361 53

14.2.2 Spare parts for angle seat control valve of Type 3360 53

14.2.3 Spare parts for globe control valve of Type 3361 53

14.3 Installation tools 55

14.3.1 Installation tools for control valves of Types 3360 and 3361 55

14.3.2 Installation tools for control valves of Type 3361 55

15 PACKAGING, TRANSPORT 56

16 STORAGE 56

17 DISPOSAL 56

valvesgo.com

MAN 1000274528 EN Version: C Status: RL (released | freigegeben) printed: 18.07.2026

1 THE SERVICE INSTRUCTIONS

The service instructions describe the procedure for replacing spare parts of the process valves of Types 3360 and 3361.

Keep these instructions in a location which is easily accessible to every user and make these instructions available to every new owner of the device.

The service instructions contain important safety information.

Failure to observe these instructions may result in hazardous situations.

▸ The service instructions must be read and understood.

1.1 Symbols

DANGER!

Warns of an immediate danger!

▸ Failure to observe the warning will result in fatal or serious injuries.

WARNING!

Warns of a potentially dangerous situation!

▸ Failure to observe the warning may result in serious injuries or death.

CAUTION!

Warns of a possible danger!

▸ Failure to observe this warning may result in a moderate or minor injury.

ATTENTION!

Warns of damage to property!

▪ Failure to observe the warning may result in damage to the device or other equipment.

Indicates important additional information, tips and recommendations.

Refers to information in these operating instructions or in other documentation.

▸ designates an instruction which you must follow to prevent a hazard.

→ designates a procedure which you must carry out.

1.2 Definitions of terms

▪ The term "device" used in these instructions applies to all valve types described in these instructions:
Type 3360, electromotive angle seat control valve
Type 3361, electromotive globe control valve

MAN 1000274528 EN Version: C Status: RL (released | freigegeben) printed: 18.07.2026

valvesgo.com

2 BASIC SAFETY INSTRUCTIONS

These safety instructions do not make allowance for any

- contingencies and events which may arise during the assembly, operation, and maintenance.
- local safety regulations – the operator is responsible for observing these regulations, also in relation to the installation personnel.

Risk of injury from high pressure.

- ▸ Before working on the system or device, switch off the pressure and vent or drain lines.

Danger of burns and risk of fire.

Following an extended duty cycle or as a result of a hot medium, the surface of the device may become hot.

- ▸ Only touch the device when wearing protective gloves.
- ▸ Keep the device away from highly flammable substances and media.

Danger due to loud noises.

- ▸ Depending on the operating conditions, the device may generate loud noises. More detailed information on the likelihood of loud noises is available from the relevant sales office.
- ▸ Wear hearing protection when in the vicinity of the device.

Leaking medium when the packing gland is worn.

- ▸ Regularly check relief bore for leaking medium.
- ▸ If medium is leaking out of the relief bore, replace the packing gland.
- ▸ If the media is hazardous, protect the area surrounding the discharge point against dangers.

Risk of crushing due to mechanically moving parts.

- ▸ Perform installation and maintenance work only in the isolated state.
  Devices with SAFEPOS energy-pack: Completely drain SAFEPOS energy-pack. Wait until LED illuminated ring goes out; the LED status must not be in **LED off** mode.
- ▸ Keep clear of the openings in the valve body.

Danger due to an uncontrolled process in the event of a power failure.

If devices do not have the optional SAFEPOS energy-pack, the valve remains in an undefined position in the event of a power failure.

- ▸ If the valve position is relevant as regards safety in the event of a power failure: Use only those devices which have the SAFEPOS energy-pack (optional energy pack).
- ▸ In the SAFEPOS select a valve position which is safe for the process.

MAN 1000274528 EN Version: C Status: RL (released | freigegeben) printed: 18.07.2026

valvesgo.com

General hazardous situations.

To prevent injuries:

- Transport, install and dismantle a heavy device with the help of another person and with appropriate tools.
- Only trained technicians may perform installation and maintenance work.
- Secure to prevent unintentional actuation.
- Do not make any internal or external changes on the device and do not subject it to mechanical stress.
- Only feed media specified in the data sheet into the media connections.
- The valves must be installed in accordance with the regulations applicable in the country.
- After an interruption in the power supply, ensure that the process is restarted in a controlled manner. Observe sequence!
  1. Apply supply voltage.
  2. Charge the device with medium.
- Observe the general rules of technology.
- Install the valves must in accordance with the regulations applicable in the country.

NOTE!

Electrostatically sensitive components and modules.

The device contains electronic components which react sensitively to electrostatic discharge (ESD). Contact with electrostatically charged persons or objects are hazardous to these components. In the worst case scenario, they will be destroyed immediately or will fail after start-up.

- Observe the requirements in accordance with EN 61340-5-1 to minimize or avoid the possibility of damage caused by a sudden electrostatic discharge.
- Do not touch electronic components while the supply voltage is switched on.

MAN 1000274528 EN Version: C Status: RL (released | freigegeben) printed: 18.07.2026

valvesgo.com

3 GENERAL INFORMATION

3.1 Contact addresses

Germany

Bürkert Fluid Control Systems
Sales Center
Christian-Bürkert-Str. 13-17
D-74653 Ingelfingen
Tel. + 49 (0) 7940 - 10 91 111
Fax + 49 (0) 7940 - 10 91 448
Email: info@de.buerkert.com

International

Contact addresses can be found on the final pages of the printed operating instructions.

And also on the Internet at:

www.burkert.com

3.2 Warranty

The warranty is only valid if the device is used as intended in accordance with the specified application conditions.

3.3 Information on the Internet

Operating instructions and data sheets for Types 3360 and 3361 can be found on the Internet at:

www.burkert.com

3.4 Auxiliary materials

The following auxiliary materials are recommended in these instructions for carrying out repairs:

Type of auxiliary material	Auxiliary material	Manufacturer's specifications
Sealer and anti-seize agents	Silicone grease OKS 1110-3	OKS Schmierstoffe GmbH www.oks-germany.com
Lubricant	Klüberpaste UH1 96-402	Klüber Lubrication München www.klueber.de

MAN 1000274528 EN Version: C Status: RL (released | freigegeben) printed: 18.07.2026

valvesgo.com

4 OVERVIEW OF SPARE PARTS

4.1 Replacement part sets for Type 3360

The following replacement part sets are available for Type 3360:

- **Control cone set**
  consisting of: Control cone, dowel pin, graphite seal and lubricant
- **Seal set for the packing gland**
  consisting of: Individual parts of the packing gland, graphite seal and lubricant
- **Spindle guide for the packing gland**
  consisting of: Spindle guide, graphite seal and lubricant

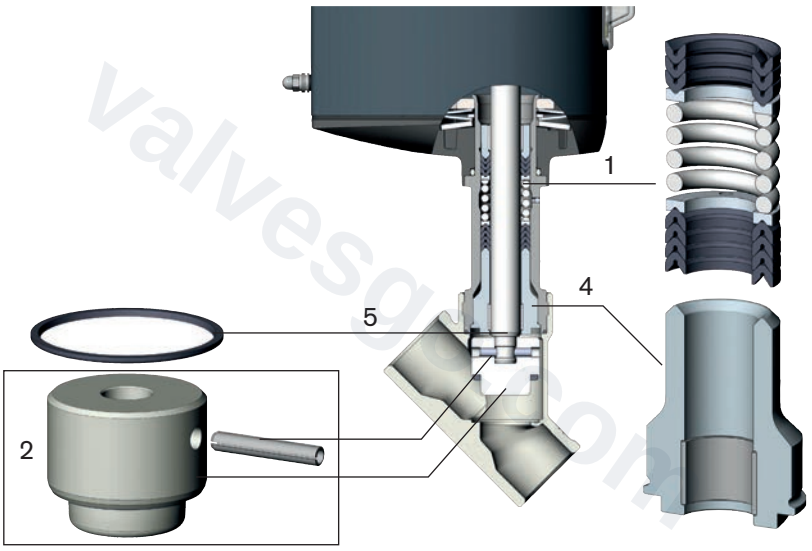

Item	Description
1	Packing gland
2	Control cone with dowel pin
4	Spindle guide
5	Graphite seal

Table 1: Spare parts Type 3360

valvesgo.com

MAN 1000274528 EN Version: C Status: RL (released | freigegeben) printed: 18.07.2026

valvesgo.com

4.2 Replacement part sets for Type 3361

The following replacement part sets are available for Type 3361:

- **Control cone set**
  consisting of: Control cone, dowel pin, graphite seal and lubricant
- **Valve seat set**
  consisting of: Valve seat and graphite seal and (with O-ring from seat size 25)
- **Seal set for the packing gland**
  consisting of: Individual parts of the packing gland, graphite seal and lubricant
- **Spindle guide for the packing gland**
  consisting of: Spindle guide, graphite seal and lubricant

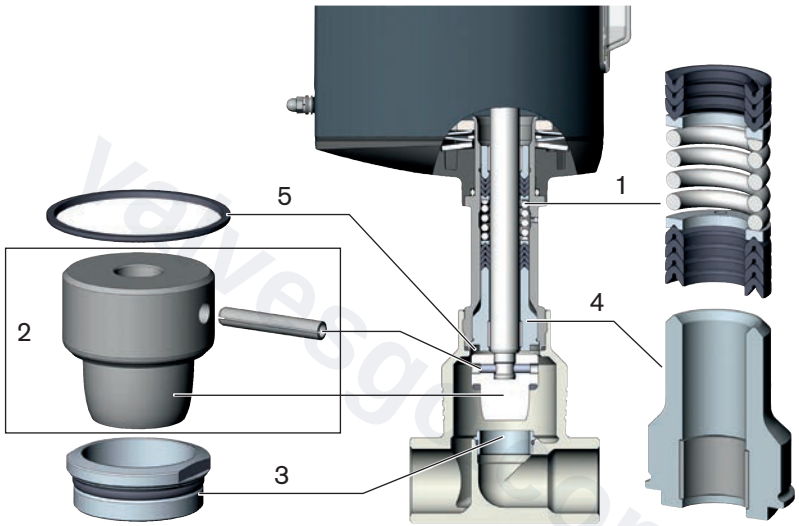

Item	Description
1	Packing gland
2	Control cone with dowel pin
3	Valve seat (with O-ring from seat size 25)
4	Spindle guide
5	Graphite seal

Table 2: Spare parts Type 3361

MAN 1000274528 EN Version: C Status: RL (released | freigegeben) printed: 18.07.2026

valvesgo.com

4.3 Spare parts for Types 3360 and 3361

- SAFEPOS energy-pack.
  Optionally there is an energy pack for the device. If the supply voltage fails, the energy pack supplies the actuator with the required energy to move the valve into the required position which can be adjusted via the menu.

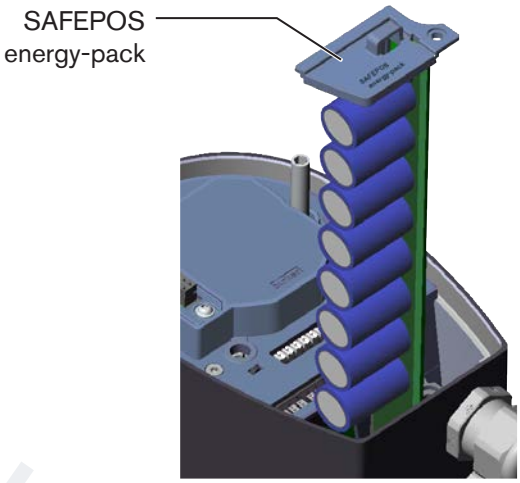

valvesgo.com

MAN 1000274528 EN Version: C Status: RL (released | freigegeben) printed: 18.07.2026

valvesgo.com

5 REPLACING THE CONTROL CONE

DANGER!

Risk of injury from high pressure.

▸ Before working on the system or device, switch off the pressure and vent or drain lines.

WARNING!

Risk of injury due to improper replacement of spare parts.

▸ Spare parts may be replaced only by trained technicians and with the appropriate tools.

Risk of crushing

If electrically connected devices are not installed in the pipeline, there is a risk of crushing by mechanically moving parts.

▸ Do not reach into the openings of the valve body.

5.1 Required work steps

The following steps are required to change the control cone.

1. Set operating state MANUAL, chapter "8" on page 26.
2. Move valve into open position., chapter "9" on page 28.
3. Switch off the supply voltage. Wait until LED illuminated ring goes out.
4. Remove actuator from valve body, chapter "10" on page 35.
5. Replace control cone, chapter "5.3" on page 14.
6. Mount actuator on valve body, chapter "11" on page 37.
7. Apply supply voltage.
8. Adjusting the position control – running X.TUNE, chapter "12" on page 39.
9. Set operting state AUTOMATIK, chapter "8" on page 26.

5.2 Required tools and equipment

- Allen key, width across flats 3 mm
  Only required when no supply voltage is applied to the device in order to move the valve into the open position.
- Open-end wrench
- Holding device to clamp the valve body
- Pin punch
- Hammer
- Prism to support the control cone
- Suitable lubricant, e.g. Klüberpaste UH1 96-402 of the company Klüber.

MAN 1000274528 EN Version: C Status: RL (released | freigegeben) printed: 18.07.2026

valvesgo.com

WARNING!

Risk of injury if the wrong tools are used.

It is dangerous to use unsuitable tools for installation work as the device may be damaged.

▸ Work on the device only with tools which are specified for the particular activity.

5.3 Replace control cone

Preconditions: MANUAL operating state, valve position at least 1/3 open, supply voltage switched off, actuator removed from the valve body.

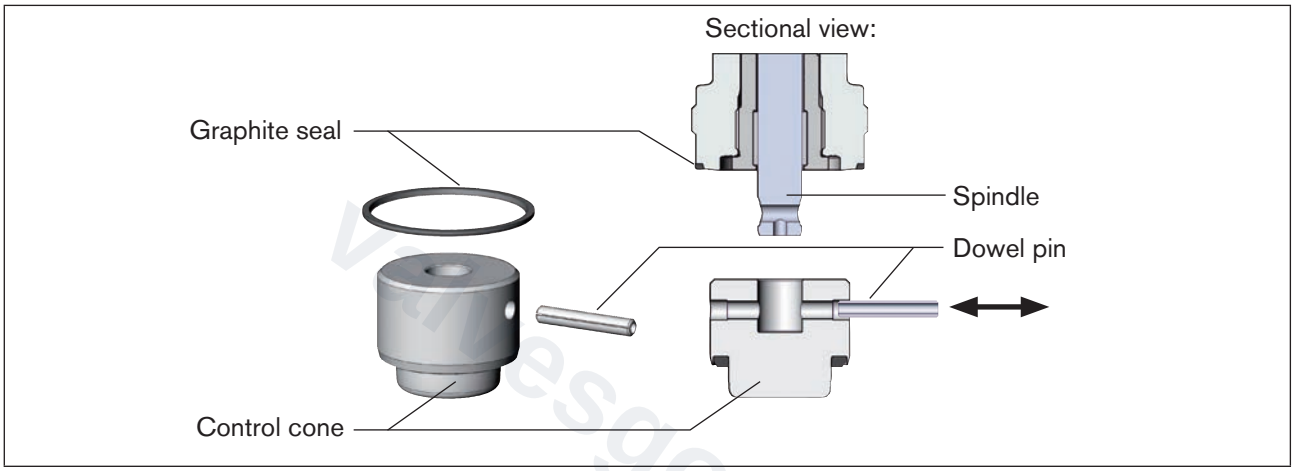

Figure 1: Replace control cone

Remove control cone:

→ Knock out dowel pin using a suitable pin punch (see table).

Spindle diameter [mm]	Pin punch	Orifice connection (valve body) [DN]
10	4	10/15 and 20
14	5	25 to 50

Table 3: Spindle diameter with reference to DN

→ Remove control cone.

Mount new control cone:

NOTE!

Important information for the problem-free and safe functioning of the device: The sealing surface and cone contour of the control cone must not be damaged.

→ Attach new control cone to the spindle.

→ Align bores of the control cone and spindle.

MAN 1000274528 EN Version: C Status: RL (released | freigegeben) printed: 18.07.2026

valvesgo.com

→ Support control cone on the cylindrical part with the help of a prism.

→ Put on dowel pin and carefully knock in with a hammer.

→ Position the dowel pin in the center of the spindle axis.

Next steps:

- Mount actuator on valve body, chapter "11" on page 37.
- Apply supply voltage.
- Adjusting the position control – running X.TUNE, chapter "12" on page 39.
- Set operting state AUTOMATIK, chapter "8" on page 26.

MAN 1000274528 EN Version: C Status: RL (released | freigegeben) printed: 18.07.2026

valvesgo.com

valvesgo.com

6 REPLACING THE SEAL SET

DANGER!

Risk of injury from high pressure.

▸ Before working on the system or device, switch off the pressure and vent or drain lines.

WARNING!

Risk of injury due to improper replacement of spare parts.

▸ Spare parts may be replaced only by trained technicians and with the appropriate tools.

6.1 Required work steps

1. Set operating state MANUAL, chapter "8" on page 26.
2. Move valve into open position., chapter "9" on page 28.
3. Switch off the supply voltage. Wait until LED illuminated ring goes out.
4. Remove actuator from valve body, chapter "10" on page 35.
5. Remove control cone, chapter "6.3" on page 17.
6. Replace packing gland,
   for sizes DN 10 – 15, seat size 3 – 10 or vacuum version, chapter "6.4" on page 18,
   for sizes DN 20 – 50, seat size 20 – 50, chapter "6.5" on page 20
7. Mount control cone, chapter "6.6" on page 22.
8. Mount actuator on valve body, chapter "11" on page 37.
9. Apply supply voltage.
10. Adjusting the position control – running X.TUNE, chapter "12" on page 39.
11. Set operting state AUTOMATIK, chapter "8" on page 26.

6.2 Required tools and equipment

- Allen key, width across flats 3 mm
  Only required when no supply voltage is applied to the device in order to move the valve into the open position.
- Open-end wrench
- Holding device to clamp the valve body
- Prism to support the control cone
- Pin punch
- Hammer
- Modified socket wrench. For valves from size DN 20, seat size 20 is required.
  Order number see chapter "14.3.1 Installation tools for control valves of Types 3360 and 3361".
- Compressed air for removing the packing gland from DN 20 - 50, seat sizes 20 - 50.
- Suitable lubricant, e.g. Klüberpaste UH1 96-402 of the company Klüber.

MAN 1000274528 EN Version: C Status: RL (released | freigegeben) printed: 18.07.2026

valvesgo.com

WARNING!

Risk of injury if the wrong tools are used.

It is dangerous to use unsuitable tools for installation work as the device may be damaged.

▸ Work on the device only with tools which are specified for the particular activity.

6.3 Remove control cone

Preconditions: MANUAL operating state, valve position at least 1/3 open, supply voltage switched off, actuator removed from the valve body.

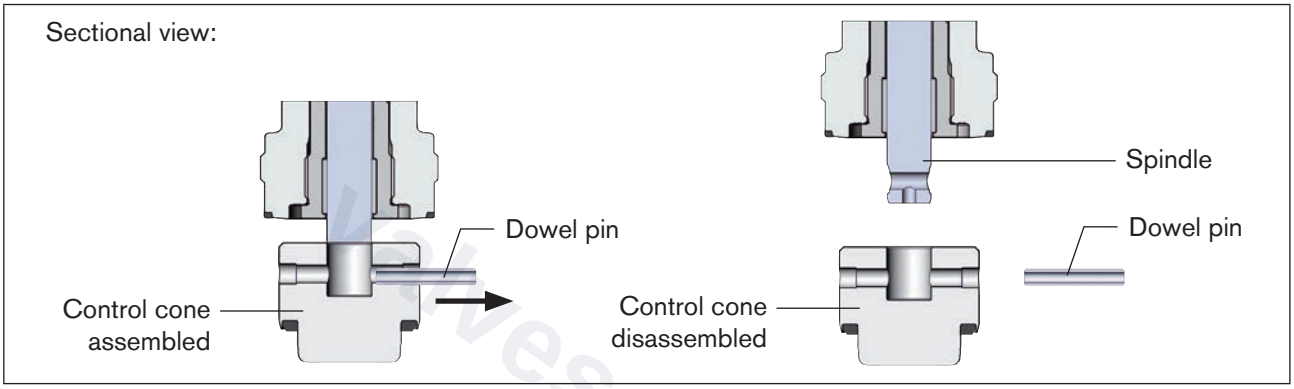

Figure 2: Remove control cone

→ Knock out dowel pin using a suitable pin punch (see table).

Spindle diameter [mm]	Pin punch	Orifice connection (valve body) [DN]
10	4	10/15 and 20
14	5	25 to 50

Table 4: Spindle diameter with reference to DN

→ Remove control cone.

NOTE!

Important information for the problem-free and safe functioning of the device: The sealing surface and cone contour of the control cone must not be damaged.

MAN 1000274528 EN Version: C Status: RL (released | freigegeben) printed: 18.07.2026

valvesgo.com

6.4 Replace packing gland, sizes DN 10 – DN 15, seat sizes 3 – 10 or vacuum version

Preconditions:
MANUAL operating state, valve position at least 1/3 open, supply voltage switched off, actuator removed from the valve body, control cone removed.

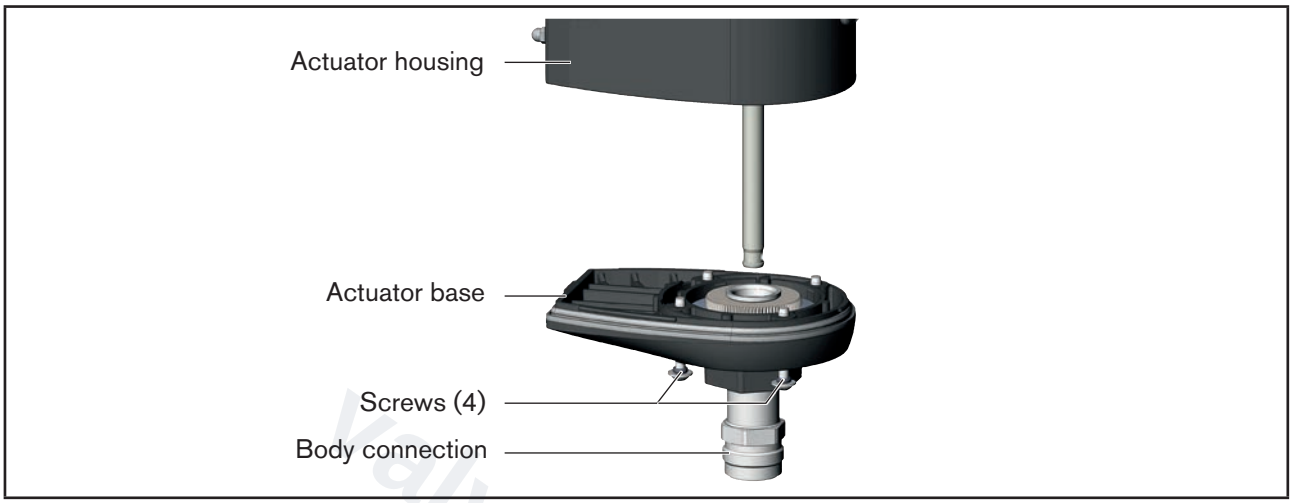

Figure 3: Dismantle actuator base

Dismantle actuator base:

→ Clamp the body connection in a holding device.

→ Loosen 4 screws on the actuator base.

→ Remove actuator housing from the actuator base.

Remove packing gland:

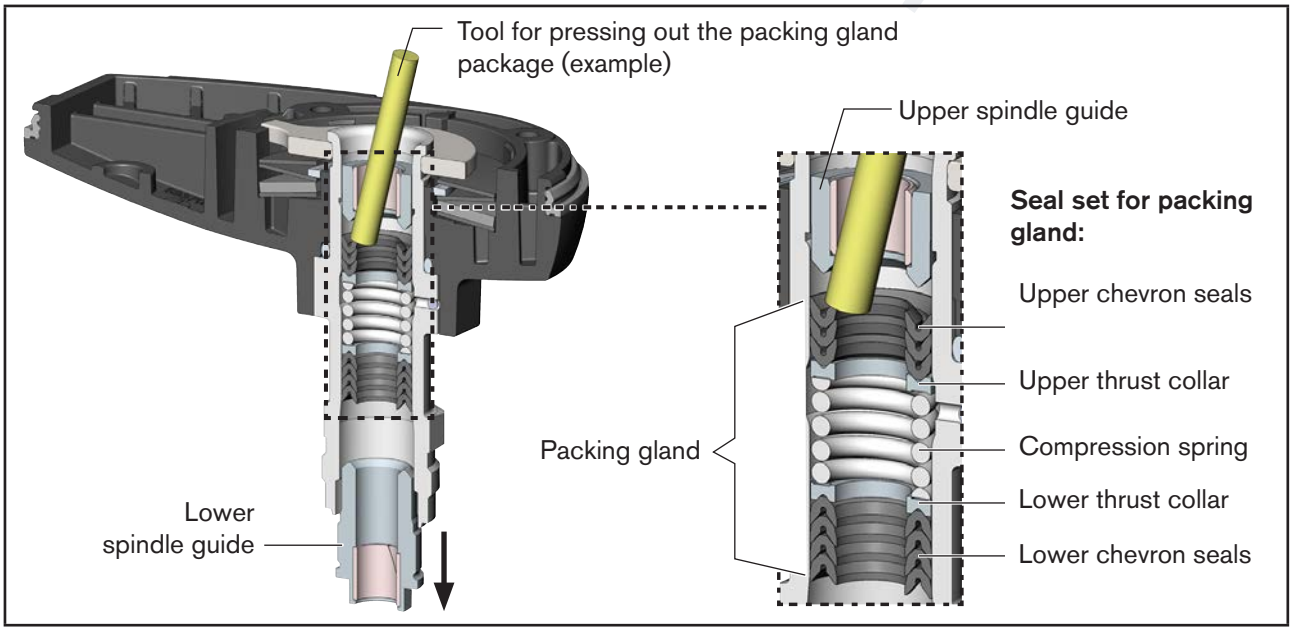

Figure 4: Remove packing gland: Sizes DN 10 – DN 15, seat size 3 – 10 or vacuum version

MAN 1000274528 EN Version: C Status: RL (released | freigegeben) printed: 18.07.2026

valvesgo.com

→ Clamp the actuator base in a holding device.

→ Unscrew lower spindle guide.

→ Using a suitable tool (e.g. screwdriver), carefully press out the packing gland package.
⚠ Do not damage the upper spindle guide.

Mount new packing gland:

⚠ WARNING!

Danger if unsuitable lubricants are used.

Unsuitable lubricant may contaminate the medium. In oxygen applications there is a risk of an explosion.

▸ Only use approved lubricants for specific applications, such as oxygen applications or analytical applications.

→ Grease chevron seals of the new packing gland with the supplied lubricant.

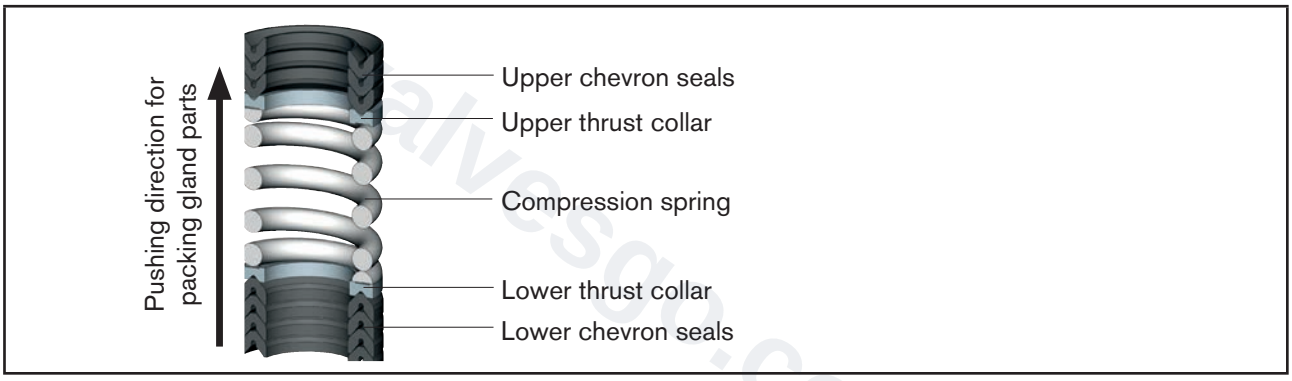

Figure 5: Construction of the packing gland

→ Insert the parts of the new packing gland individually in the correct sequence (see "Figure 5").

→ Grease spindle guide thread. Screw in spindle guide.
⚠ Observe tightening torque (see table).

Spindle diameter [mm]	Orifice connection (valve body) [DN]	Tightening torques [Nm]
10	10/15	15
	20	25
14	25	25
	32 to 50	60

Table 5: Spindle guide tightening torques

→ Place actuator base on the actuator housing.

→ Tighten 4 screws crosswise.
⚠ Observe tightening torque of 5 Nm.

Next step:

- Mount control cone, chapter "6.6" on page 22.

valvesgo.com

6.5 Replace packing gland, sizes DN 20 – DN 50, seat sizes 20 – 50

Preconditions:
MANUAL operating state, valve position at least 1/3 open, supply voltage switched off, actuator removed from the valve body, control cone removed.

Remove packing gland:

→ Place the open-end wrench on the body connection. Unscrew spindle guide with the aid of a modified socket wrench.

Modified socket wrench is not included in the spare part sets. The modified socket wrench can be ordered separately. Order number see chapter "14 Accessories, spare parts". If you have any questions, please contact your Bürkert sales office.

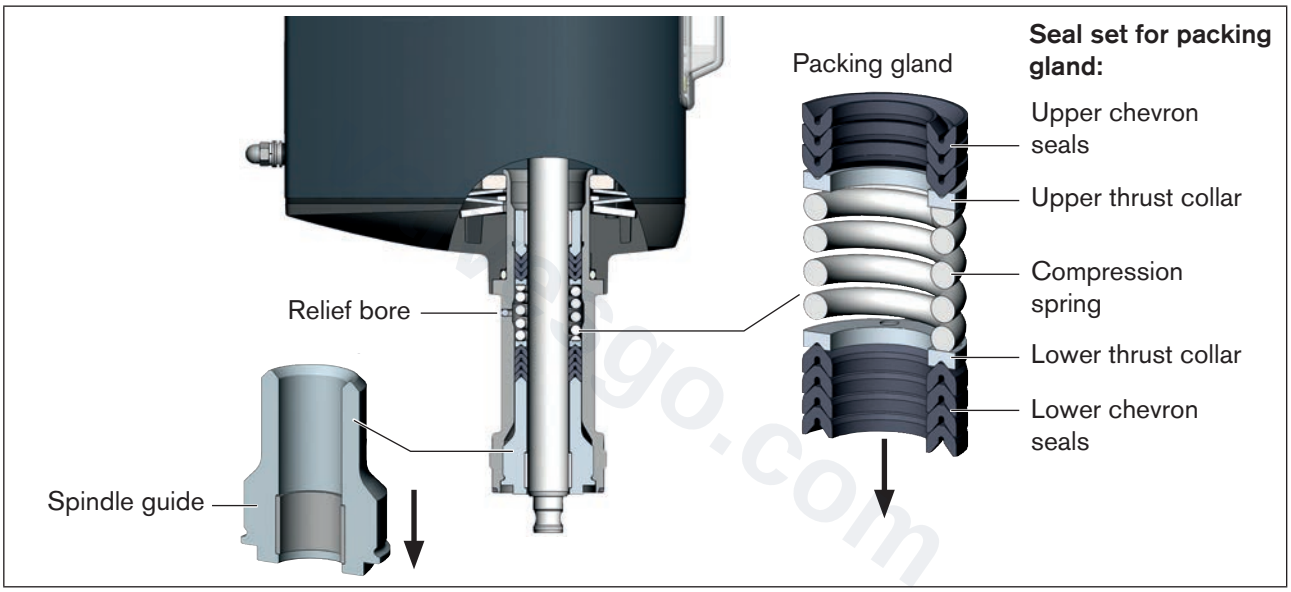

Figure 6: Replace packing gland: Sizes DN 20 – DN 50, seat sizes 20 – 50

WARNING!

Risk of injury from ejected parts.

When the spindle opening is exposed, the individual parts of the packing gland are pressed out at an undefined speed when the relief bore is pressurized.

- Before pressurizing with compressed air, safeguard the ambient area of the discharge opening (e.g. place spindle on a firm base).

→ Place spindle on a firm base.

→ Pressurize relief bore with approx. 6 bar compressed air.

Caution!
Not all individual parts of the packing gland are pressed out by pressurizing with compressed air. Usually the upper chevron seals remain in the packing gland tube. Replace the pressed out individual parts only.

MAN 1000274528 EN Version: C Status: RL (released | freigegeben) printed: 18.07.2026

valvesgo.com

NOTE!

Individual parts of the packing gland can remain inserted in the threaded part of the packing gland tube.

The individual parts are then ready to hand:

1. Before pressurizing the relief bore: Move the spindle with the aid of the mechanical manual control (see chapter "9.3") into the upper position.
2. After pressurizing the relief bore: Move the spindle with the aid of the mechanical manual control into the lower position.

Mount new packing gland:

WARNING!

Danger if unsuitable lubricants are used.

Unsuitable lubricant may contaminate the medium. In oxygen applications there is a risk of an explosion.

▸ Only use approved lubricants for specific applications, such as oxygen applications or analytical applications.

→ Grease chevron seals of the new packing gland with the supplied lubricant.

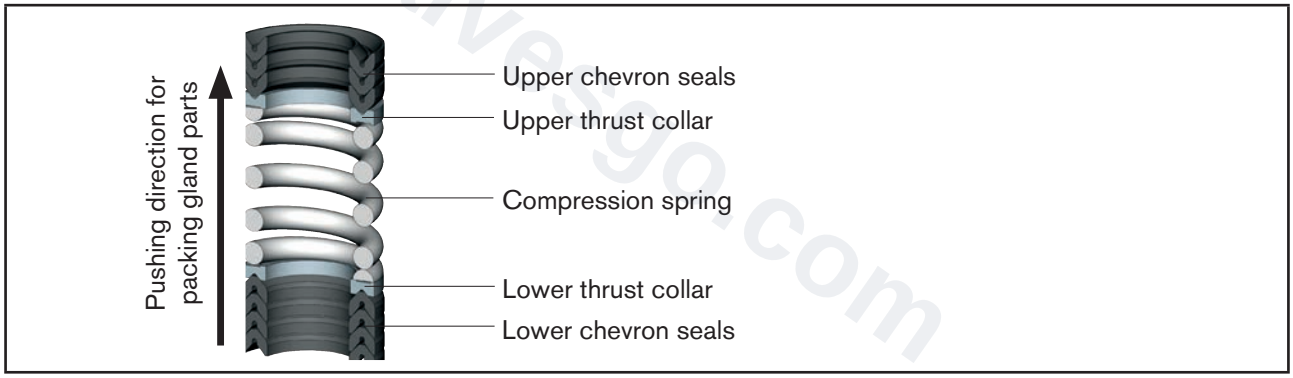

Figure 7: Structure of the packing gland

→ Place the individual parts on the spindle in the prescribed direction and sequence.

→ Push packing gland into the packing gland tube.

→ Grease spindle guide thread with Klüberpaste UH1 96-402.

→ Screw in spindle guide.
⚠ Observe tightening torque (see table).

Spindle diameter [mm]	Orifice connection (valve body) [DN]	Tightening torques [Nm]
10	10/15	15
	20	25
14	25	25
	32 to 50	60

Table 6: Spindle guide tightening torques

MAN 1000274528 EN Version: C Status: RL (released | freigegeben) printed: 18.07.2026

valvesgo.com

Next step:

- Mont control cone, chapter "6.6" on page 22

6.6 Mount control cone

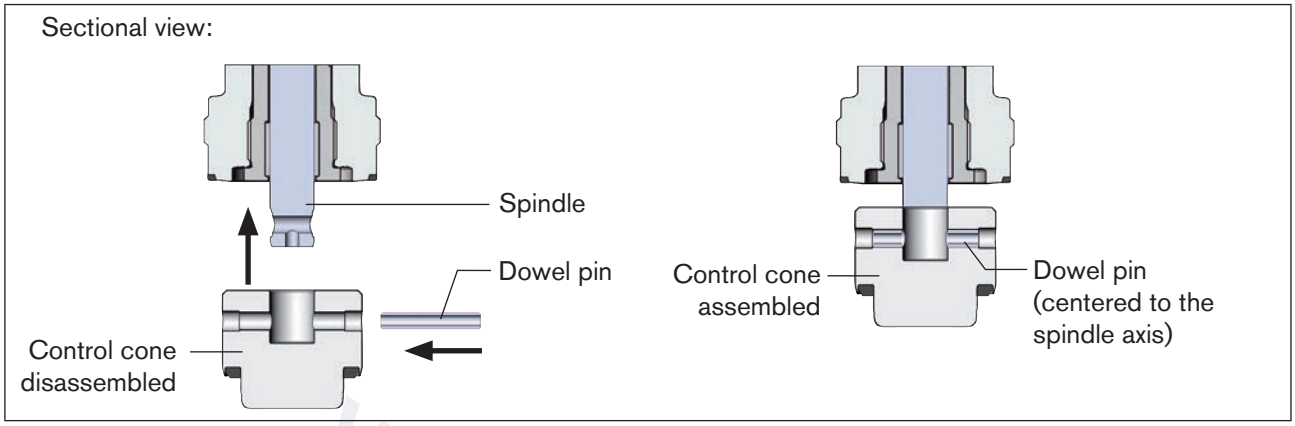

Figure 8: Mount control cone

NOTE!

Important information for the problem-free and safe functioning of the device: The sealing surface and cone contour of the control cone must not be damaged.

→ Attach control cone to the spindle.

→ Align bores of the control cone and spindle.

→ Support control cone on the cylindrical part with the help of a prism.

→ Put on dowel pin and carefully knock in with a hammer.

→ Position the dowel pin in the center of the spindle axis.

Next steps:

- Mount actuator on valve body, chapter "11" on page 37.
- Apply supply voltage.
- Adjusting the position control – running X.TUNE, chapter "12" on page 39.
- Set operting state AUTOMATIK, chapter "8" on page 26.

MAN 1000274528 EN Version: C Status: RL (released | freigegeben) printed: 18.07.2026

valvesgo.com

7 REPLACING THE VALVE SEAT

DANGER!

Risk of injury from high pressure.

▸ Before working on the system or device, switch off the pressure and vent or drain lines.

WARNING!

Risk of injury due to improper replacement of spare parts.

▸ The seal set may be replaced only by trained technicians and with the appropriate tools.

7.1 Required work steps

1. Set operating state MANUAL, chapter "8" on page 26.
2. Move valve into open position., chapter "9" on page 28.
3. Switch off the supply voltage. Wait until LED illuminated ring goes out.
4. Remove actuator from valve body, chapter "10" on page 35.
5. Replace valve seat, chapter "7.3" on page 24
6. Mount actuator on valve body, chapter "11" on page 37.
7. Apply supply voltage.
8. Adjusting the position control – running X.TUNE, chapter "12" on page 39.
9. Set operting state AUTOMATIK, chapter "8" on page 26.

7.2 Required tools and equipment

- Allen key, width across flats 3 mm
  Only required when no supply voltage is applied to the device in order to move the valve into the open position.
- Open-end wrench
- Holding device to clamp the valve body
- Pin punch
- Hammer
- Installation tool, order number see chapter "14.3.2 Installation tools for control valves of Type 3361"
- Compressed air for cleaning.
- Suitable lubricant, e.g. Klüberpaste UH1 96-402 of the company Klüber.

WARNING!

Risk of injury if the wrong tools are used.

It is dangerous to use unsuitable tools for installation work as the device may be damaged.

▸ Work on the device only with tools which are specified for the particular activity.

MAN 1000274528 EN Version: C Status: RL (released | freigegeben) printed: 18.07.2026

valvesgo.com

7.3 Replace valve seat

Preconditions:
MANUAL operating state, valve position fully open, supply voltage switched off, actuator removed from the valve body.

Remove valve seat:

→ Select a suitable tool insert and screw it into the installation tool.

Installation tool is not included in the replacement part set. The installation tool can be ordered separately. Order number see chapter "14 Accessories, spare parts". If you have any questions, please contact your Bürkert sales office.

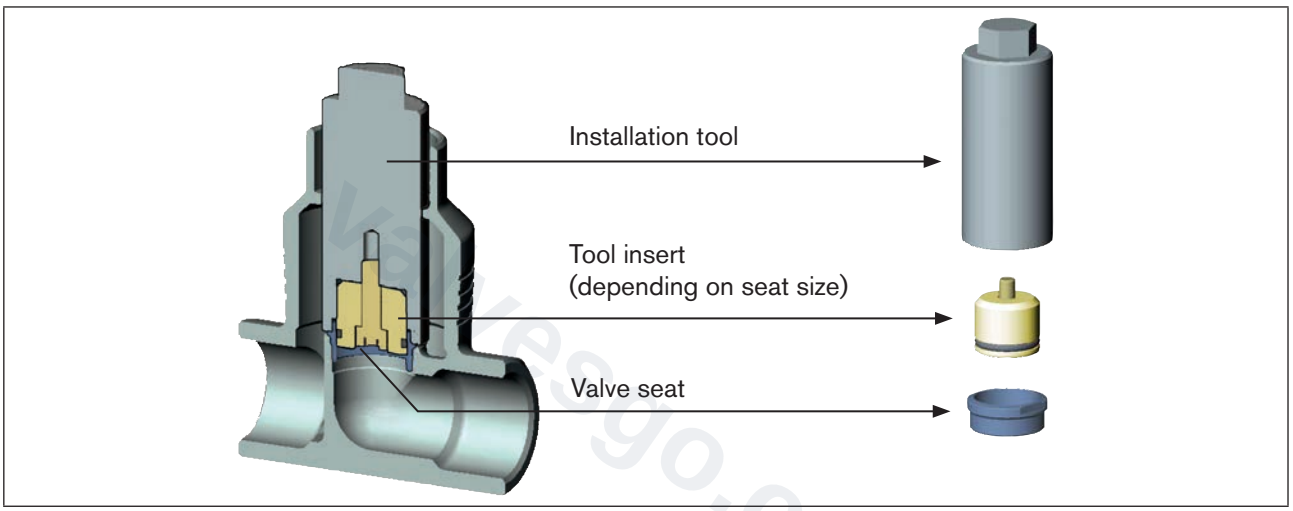

Figure 9: Replace valve seat

→ Unscrew the valve seat using the installation tool and a wrench.

→ Clean the thread and sealing surface in the valve body using compressed air.

Mount new valve seat:

→ Place the new valve seat on the installation tool.

WARNING!

Danger if unsuitable lubricants are used.

Unsuitable lubricant may contaminate the medium. In oxygen applications there is a risk of an explosion.

▸ Only use approved lubricants for specific applications, such as oxygen applications or analytical applications.

→ Grease the valve seat thread with a lubricant (e.g. with Klüberpaste UH1 96-402 from Klüber).

→ Manually screw the fitted valve seat into the valve body thread.

→ Screw in valve seat tight using torque wrench.
⚠ Observe tightening torque (see "Table 7").

MAN 1000274528 EN Version: C Status: RL (released | freigegeben) printed: 18.07.2026

valvesgo.com

Screw connection		Tightening torque	
Seat size of the valve	Orifice connection (valve body) [DN]	Coated seats [Nm]	Tolerance [Nm]
3-15	10/15	20	+3
20	20	28	+3
25	25	40	+5
32	32	65	+5
40	40	85	+8
50	50	120	+8

Table 7: Tightening torques for valve seat installation

Next steps:

- Mount actuator on valve body, chapter "11" on page 37.
- Apply supply voltage.
- Adjusting the position control – running X.TUNE, chapter "12" on page 39.
- Set operting state AUTOMATIK, chapter "8" on page 26.

Valvesgo.com

MAN 1000274528 EN Version: C Status: RL (released | freigegeben) printed: 18.07.2026

8 SETTING OPERATING STATE

8.1 Setting operating state for devices without display module

The operating state is set with DIP switch 4 which is located under the dummy cover.

→ To release, rotate the dummy cover counter-clockwise and remove.

Devices with ATEX approval or IECEx approval are secured with a magnetic lock.

The removal of the cover is described in the additional manual for electromotive control valves with ATEX approval and IECEx approval.

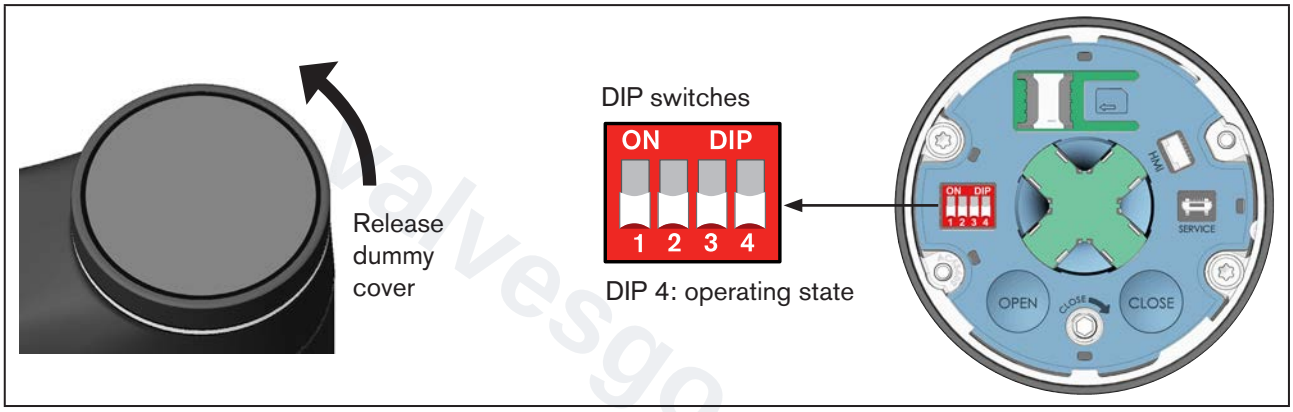

Figure 10: Setting operating state

→ Set operating state on DIP switch 4.

ON DIP 1 2 3 4	Operating state	
	AUTOMATIC: DIP 4 ➔ downwards	MANUAL: DIP 4 ➔ upwards (ON)

→ Close the dummy cover.

Tip for replacing spare parts:

The OPEN button and CLOSE button for changing the valve position are located under the DIP switch.

valvesgo.com

MAN 1000274528 EN Version: C Status: RL (released | freigegeben) printed: 18.07.2026

8.2 Setting operating state for devices with display module

The operating state is set in View 1 (home screen).

→ To switch to View 1, hold down the back key ⮌.

To change the operating state, the MANU / AUTO layout must be selected for View 1
The layout is set in the context menu:
To open the context menu, hold down the menu key ☑.

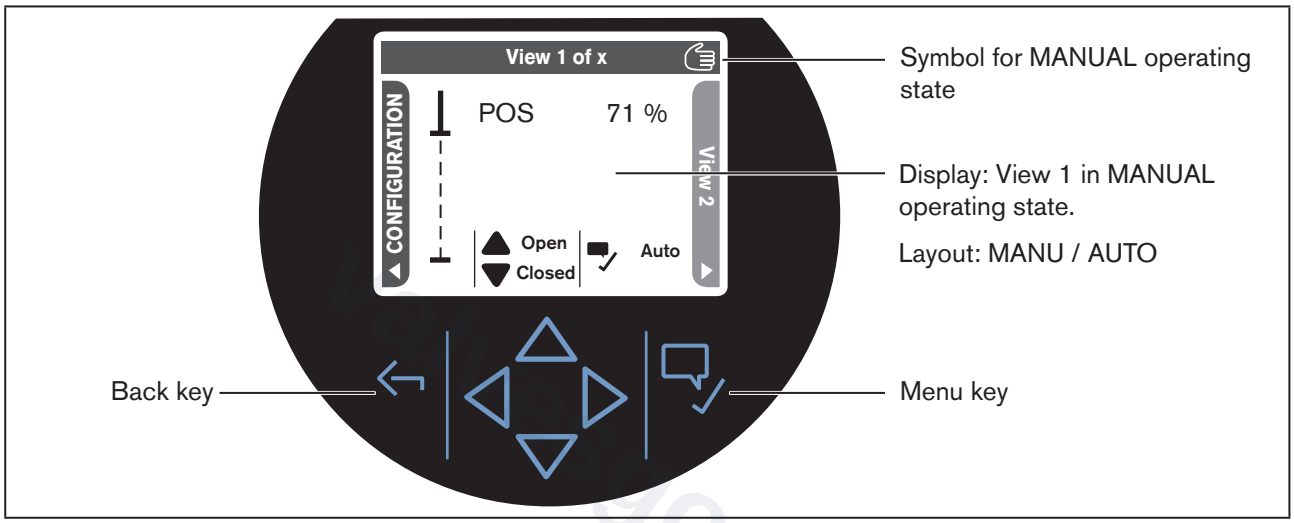

Figure 11: Switching operating state, MANUAL – AUTOMATIC

Setting operating state:

→ To switch to the operating state, briefly press the ☑ menu key.

MANUAL: The HAND symbol ☜ can be seen at the top on the information bar. The 2 arrow symbols labeled "open" and "closed" are shown.

AUTOMATIC: The LED illuminated ring on the device is lit. The HAND symbol ☜ and the 2 arrow symbols labeled "open" and "closed" are hidden.

Tip for replacing spare parts:

To open the valve, press the upper navigation key △.

Additional setting option for the operating state.

The operating state can also be set in the configuration area **General settings** → **MAINTENANCE** in the menu **AUTO I MANU**.

The setting can be made on the display or using the Bürkert Communicator PC software.

MAN 1000274528 EN Version: C Status: RL (released | freigegeben) printed: 18.07.2026

valvesgo.com

9 MANUAL ACTUATION OF THE VALVE

The valve can be manually actuated in various ways:

- Electrically using the keys on the display (only on devices with display module), see "9.1" on page 28
- Electrically with the OPEN and CLOSE buttons which are located under the dummy cover (only on devices without display module), see "9.2" on page 29.
- Mechanically with the manual override, see "9.3" on page 30.

9.1 Electrically actuating valve for devices without display module

The valve is electrically actuated in MANUAL operating state in View 1 (home screen).

→ To switch to View 1 (home screen), hold down the back key ⮌.

The setting of the operating state and electrical actuation of the valve are possible in MANUAL / AUTO layout only.

The layout is set in the context menu: To open the context menu, hold down the menu key ☑.

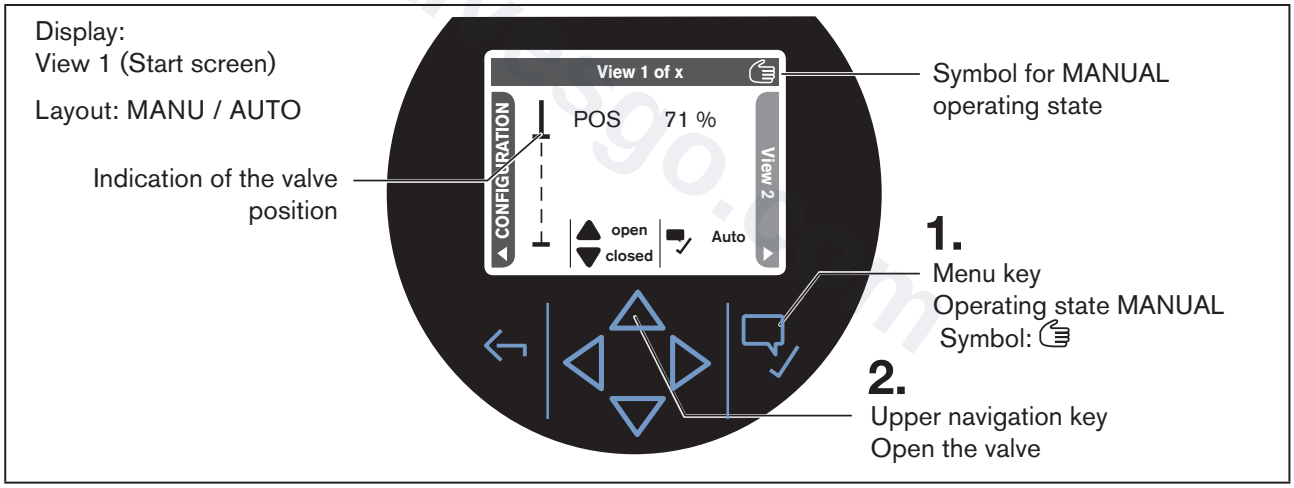

Figure 12: On the display set the operating state and actuate the valve

Changing to the operating state MANUAL:

→ Press the ☑ menu key.
The HAND symbol can be seen at the top on the information bar.
The 2 arrow symbols labeled "open" and "closed" are shown.
The LED illuminated ring on the device flashes.

Change valve postion:

→ △ To open press the upper navigation key.

→ ▽ To close press the lower navigation key.

The valve position is indicated on the display (see "Figure 12".

MAN 1000274528 EN Version: C Status: RL (released | freigegeben) printed: 18.07.2026

valvesgo.com

9.2 Electrically actuating valve for devices without display module

To actuate the valve, the device must be in MANUAL operating state.

The 2 buttons for actuating the valve and set the operating state are located under the dummy cover.

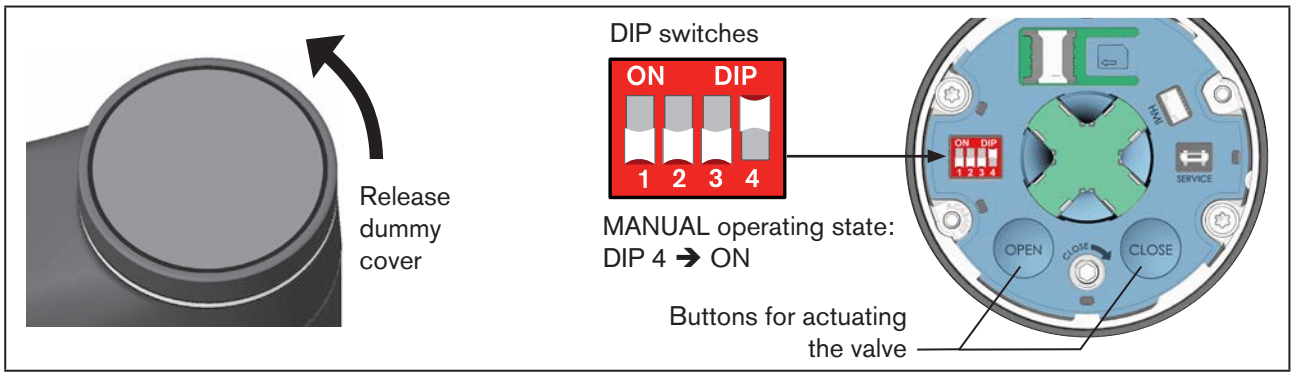

Figure 13: Setting MANUAL operating state and actuating the valve

Remove dummy cover:

Devices with ATEX approval or IECEx approval are secured with a magnetic lock.
The removal of the cover is described in the additional manual for electromotive control valves with ATEX approval and IECEx approval.

→ To release, rotate the dummy cover counter-clockwise and remove.

Changing to the operating state MANUAL:

→ Set DIP switch 4 to ON.
The device is the MANUAL operating state.

Change valve postion:

→ △ To open press the OPEN button.

→ ▽ To close press the CLOSE button.

The valve position must be detected on the mechanical position indicator.

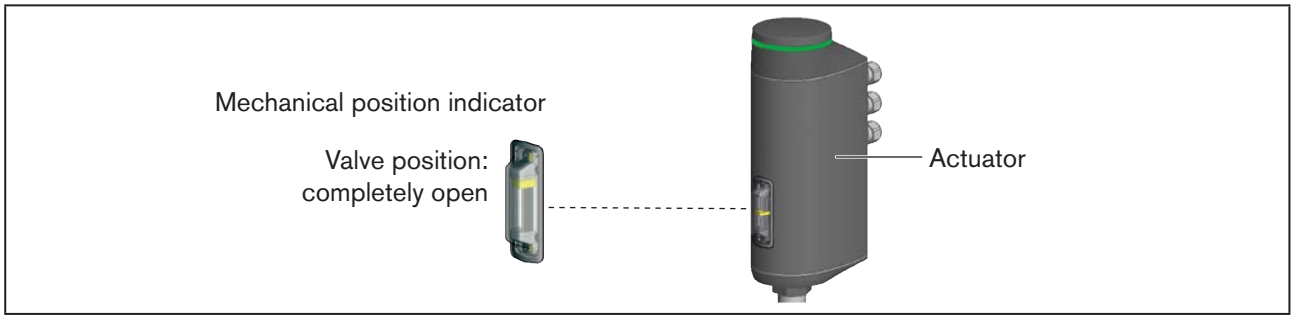

Figure 14: Mechanische Stellungsanzeige

Close dummy cover:

→ Mount dummy cover and turn clockwise until the 2 marks (one vertical line on the dummy cover and on the actuator) are vertically aligned.

MAN 1000274528 EN Version: C Status: RL (released | freigegeben) printed: 18.07.2026

valvesgo.com

9.3 Mechanical actuation of the valve

If the supply voltage is not applied, e.g. during installation or in the event of a power failure, the valve position can be changed using the mechanical manual override.

NOTE!

The mechanical manual control may be used in a de-energized state only, otherwise the device may be damaged.

9.3.1 Required work steps

Devices without fieldbus gateway:

1. Switch off the supply voltage. Wait until LED illuminated ring goes out.
2. Removing dummy cover or display module, chapter "9.3.3" on page 31.
3. Actuating valve mechanically, chapter "9.3.5" on page 32.
4. Closing the dummy cover or display module, chapter "9.3.7" on page 34.
5. Apply supply voltage.

Devices with fieldbus gateway:

1. Switch off the supply voltage. Wait until LED illuminated ring goes out.
2. Removing dummy cover or display module, chapter "9.3.3" on page 31.
3. Removing the fieldbus gateway from the actuator, chapter "9.3.4" on page 31.
4. Actuating valve mechanically, chapter "9.3.5" on page 32.
5. Mounting the fieldbus gateway on the actuator, chapter "9.3.6" on page 33.
6. Closing the dummy cover or display module, chapter "9.3.7" on page 34.
7. Apply supply voltage.

9.3.2 Required tool

- Allen key, width across flats 3 mm

MAN 1000274528 EN Version: C Status: RL (released | freigegeben) printed: 18.07.2026

valvesgo.com

9.3.3 Removing dummy cover or display module

NOTE!

Carefully remove display module ensuring that the connection cable and the HMI interface are not damaged.

Devices with ATEX approval or IECEx approval are secured with a magnetic lock.

The removal of the cover is described in the additional manual for electromotive control valves with ATEX approval and IECEx approval.



Figure 15: Removing dummy cover or display module

→ To release the display module or the dummy cover, rotate counter-clockwise and remove.
⚠ On the display module pay attention to the connection cable leading to the HMI interface!

9.3.4 Removing the fieldbus gateway from the actuator

Preconditions:
Supply voltage switched off, dummy cover or display module removed.

NOTE!

The fieldbus gateway may be removed only when it is deenergised, otherwise the device may be damaged.

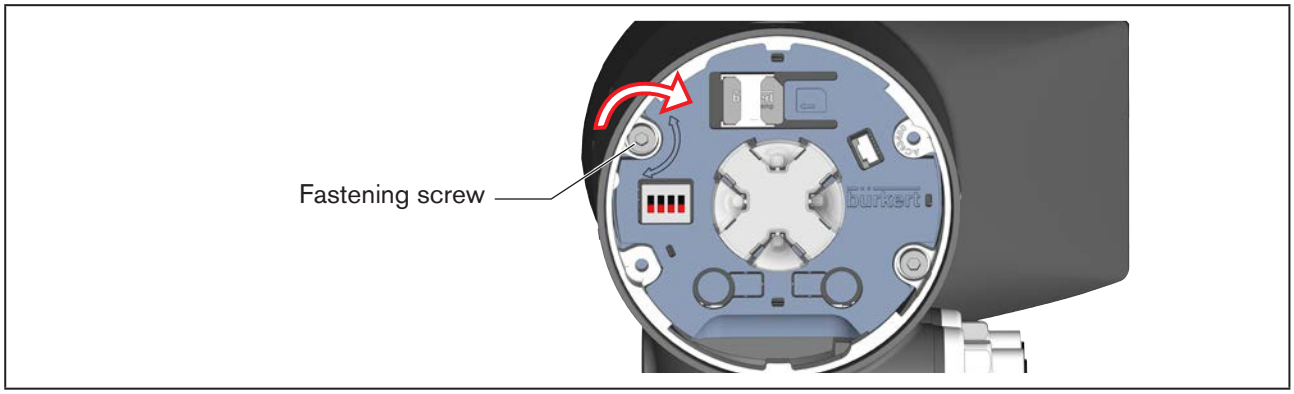

Figure 16: Remove fieldbus gateway

→ Remove fastening screw (socket head screw, width across flats 3 mm).

valvesgo.com

NOTE!

Caution when removing the fieldbus gateway. Fieldbus gateway and actuator are connected to each other by a cable.

→ To release the fieldbus gateway, turn it counterclockwise and carefully remove it.

→ Disconnect connection cable from the fieldbus gateway.

9.3.5 Actuating valve mechanically

Preconditions:
Supply voltage switched off, MANUAL operating state, dummy cover or display module removed. Also for device variant with fieldbus gateway: Fieldbus gateway removed.

NOTE!

The mechanical manual override may be used only when it is deenergised, otherwise the device may be damaged.

→ To mechanically actuate the valve, use an Allen key with width across flats 3 mm.

ATTENTION!

Maximum torque 2 Nm.
If the torque is exceeded on reaching the valve end position, the mechanical manual control will be damaged.

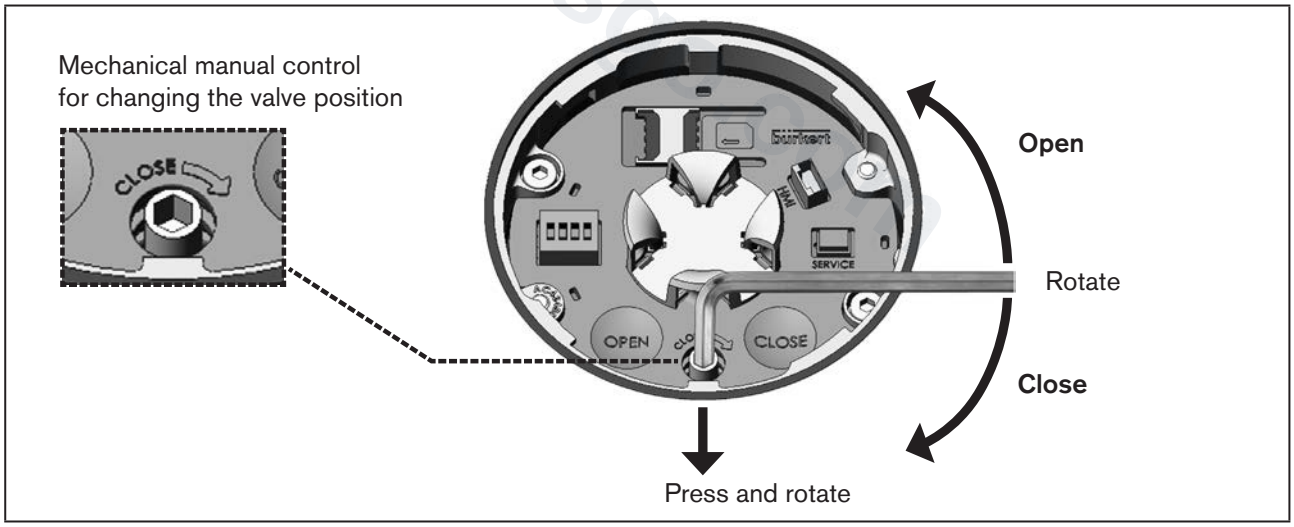

Figure 17: Mechanical manual control

→ Applying a gentle pressure, couple the mechanical manual control and simultaneously turn the Allen key counter-clockwise (see "Figure 17").
- To open, turn it counterclockwise.
- To close, turn it clockwise

⚠ Maximum tightening torque 2 Nm!

The valve position must be detected on the mechanical position indicator.

valvesgo.com

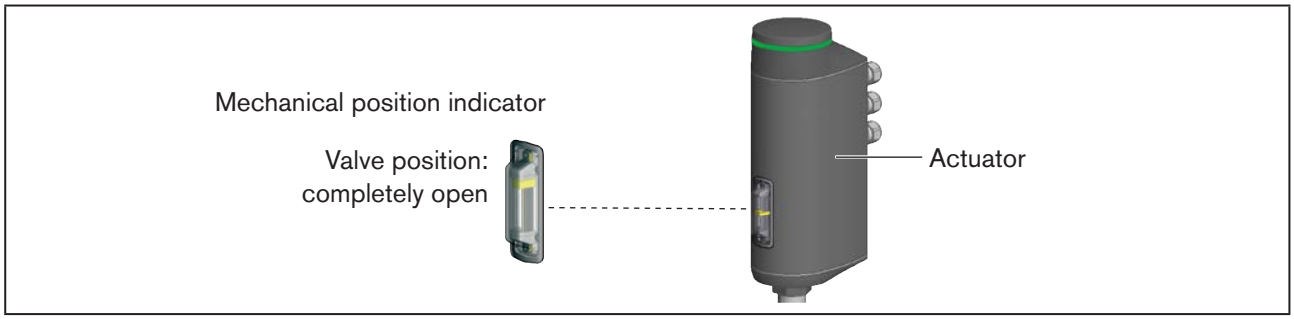

Figure 18: Mechanical position indicator

→ Remove the Allen key.

9.3.6 Mounting the fieldbus gateway on the actuator

Preconditions: Supply voltage switched off.

NOTE!

The fieldbus gateway may be mounted only when it is deenergised, otherwise the device may be damaged.

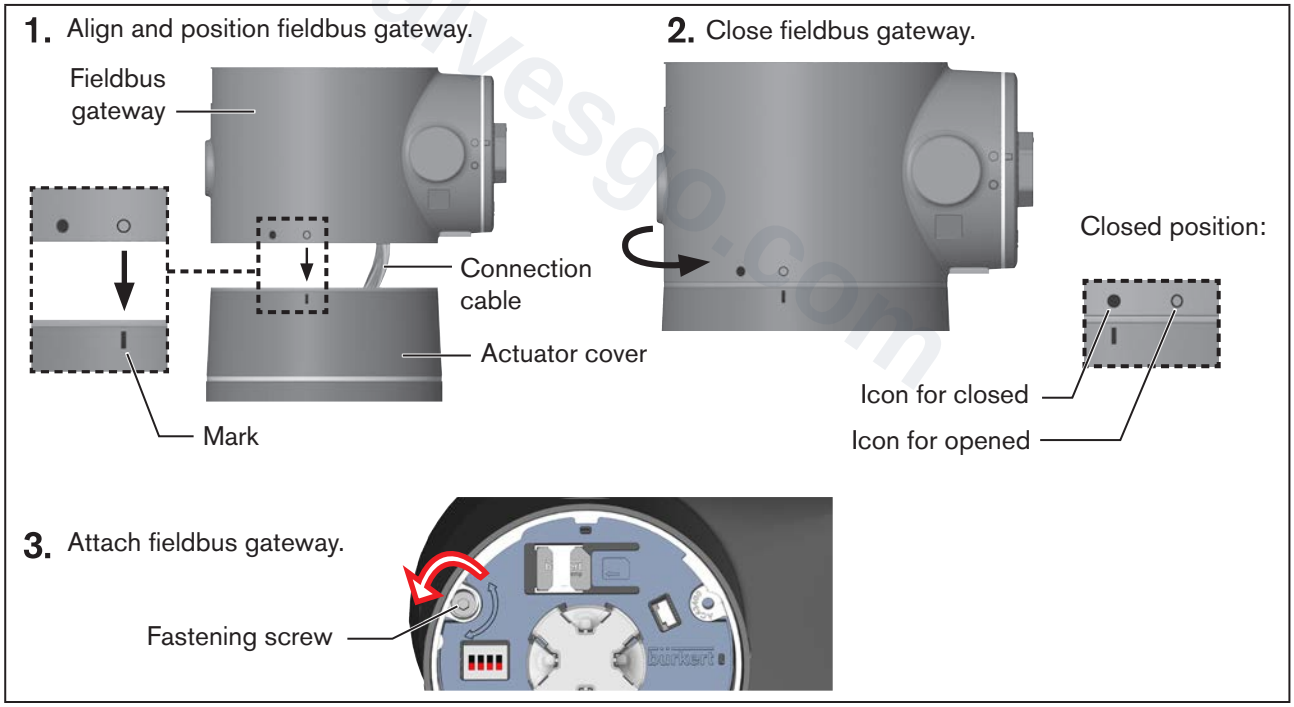

Figure 19: Mount fieldbus gateway.

→ Insert connection cable into the actuator on the fieldbus gateway.

→ Align and position fieldbus gateway on the actuator cover.
Centre the icon for opened over the mark on the actuator.

→ Manually turn fieldbus gateway clockwise until the icon for closed is positioned over the mark.

→ Tighten fastening screw (socket head screw, width across flats 3 mm).
Observe tightening torque 1.1 Nm!

valvesgo.com

9.3.7 Closing the dummy cover or display module

Devices with ATEX approval or IECEx approval are secured with a magnetic lock.

The removal of the cover is described in the additional manual for electromotive control valves with ATEX approval and IECEx approval.

NOTE!

For devices with display module
Before mounting the display, check whether the cable is correctly connected to the HMI interface.

→ Mount display module or the dummy cover and turn it clockwise until the 2 marks are vertically aligned. Vertical lines are affixed as marks to the display module, dummy cover and actuator.

valvesgo.com

MAN 1000274528 EN Version: C Status: RL (released | freigegeben) printed: 18.07.2026

10 REMOVING OF THE ACTUATOR

DANGER!

Risk of injury from high pressure.

- Before working on the system or device, switch off the pressure and vent or drain lines.

WARNING!

Risk of injury due to improper installation work.

- The actuator may be removed only by trained technicians and with the appropriate tools.

10.1 Required work steps

1. Set operating state MANUAL, chapter "8" on page 26.
2. Move valve into open position, chapter "9" on page 28.
3. Switch off the supply voltage. Wait until LED illuminated ring goes out.
4. Remove actuator from valve body, chapter "10" on page 35.

10.2 Required tools

- Allen key, width across flats 3 mm
  Only required when no supply voltage is applied to the device in order to move the valve into the open position.
- Open-end wrench

10.3 Remove actuator from valve body

Preconditions: MANUAL operating state, valve position at least 1/3 open, supply voltage switched off.

WARNING!

Risk of injury due to electric shock.
Risk of crushing due to mechanically moving parts.

- Switch off supply voltage.
- Devices with SAFEPOS energy-pack: Completely drain SAFEPOS energy-pack. Wait until LED illuminated ring goes out; the LED status must not be in **LED off** mode.

ATTENTION!

Damage to valve body or valve seat seal.

To prevent damage, the valve must be open when removing the actuator.

MAN 1000274528 EN Version: C Status: RL (released | freigegeben) printed: 18.07.2026

valvesgo.com

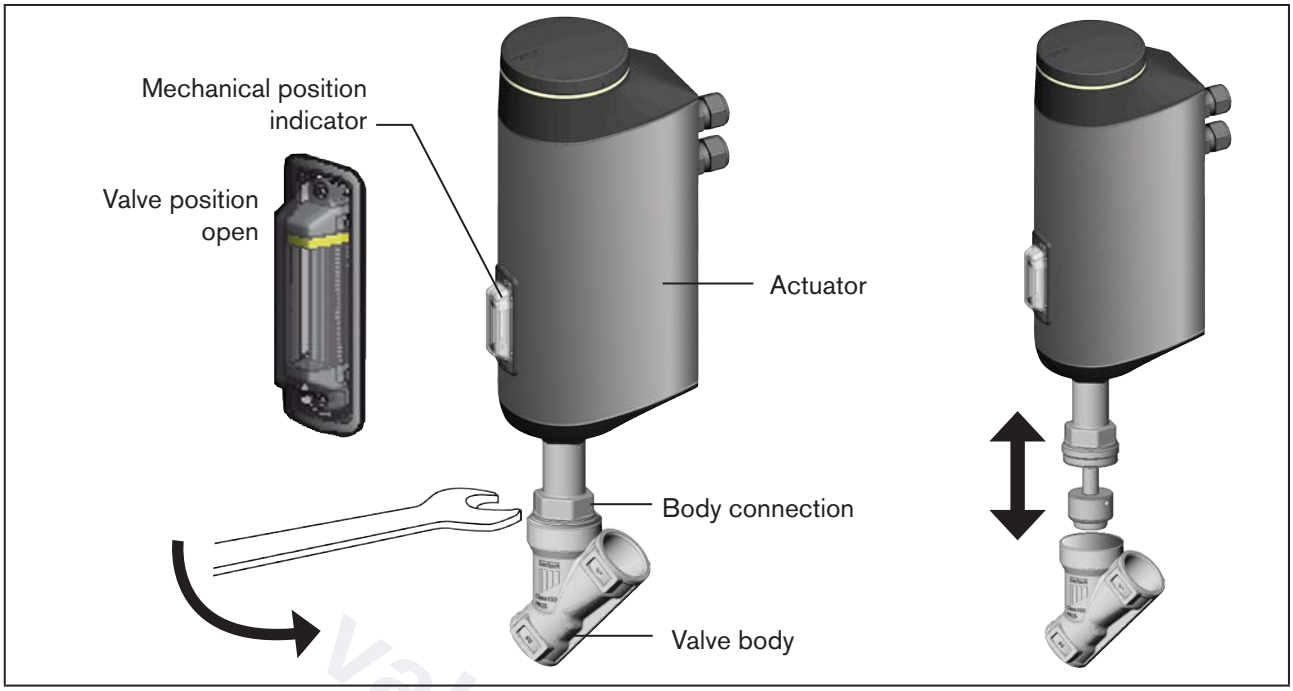

Figure 20: Removing actuator (angle seat control valve shown in the example)

→ Clamp the valve body into a holding device.

→ Place a suitable open-end wrench on the body connection.

⚠ Do not unscrew the body connection with a tool which could damage the body connection.

→ Unscrew the actuator off the valve body.

valvesgo.com

MAN 1000274528 EN Version: C Status: RL (released | freigegeben) printed: 18.07.2026

11 MOUNTING ACTUATOR ON VALVE BODY

Preconditions: MANUAL operating state, valve position at least 1/3 open, supply voltage switched off.

→ Replace graphite seal.

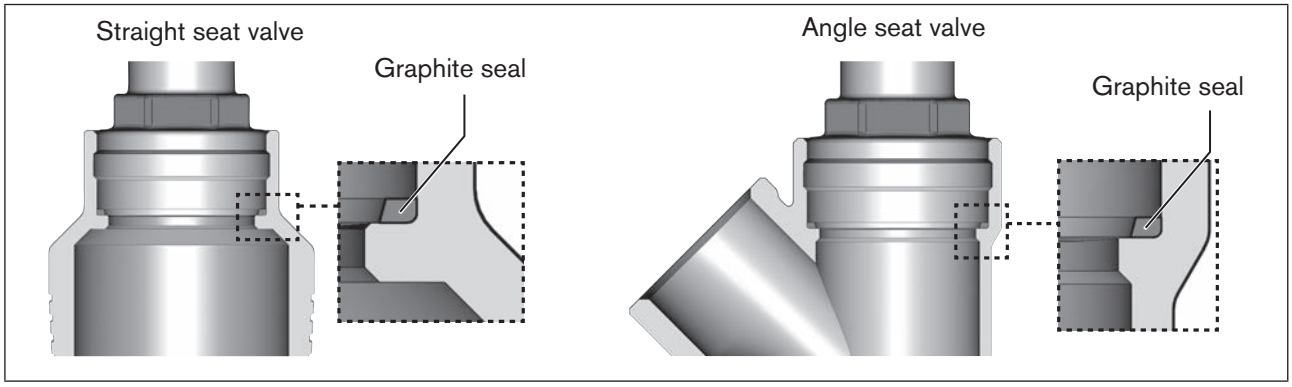

Figure 21: Graphite seal

ATTENTION!

Damage to valve body or valve seat seal.

To prevent damage, the valve must be open when mounting the actuator.

WARNING!

Danger if unsuitable lubricants are used.

Unsuitable lubricant may contaminate the medium. In oxygen applications there is a risk of an explosion.

▸ Only use approved lubricants for specific applications, such as oxygen applications or analytical applications.

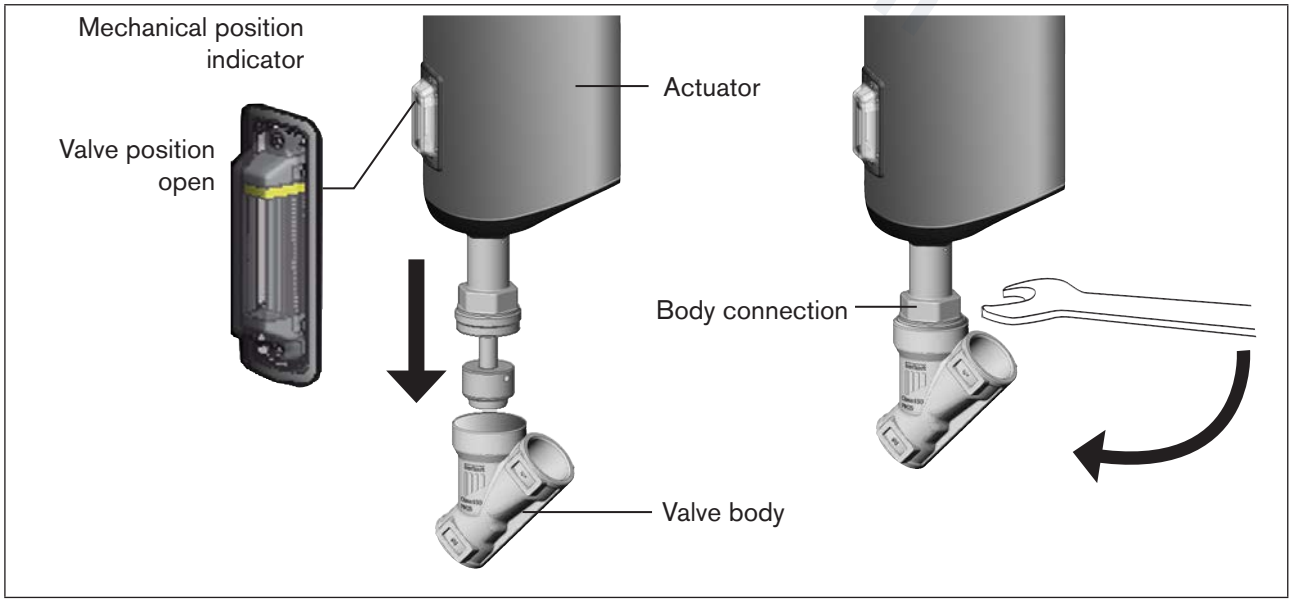

Figure 22: Mounting actuator on valve body

→ Grease the external thread of the body connection (e.g. with Klüberpaste UH1 96-402 from Klüber).

MAN 1000274528 EN Version: C Status: RL (released | freigegeben) printed: 18.07.2026

valvesgo.com

→ Place the internal thread of the valve body on the external thread of the body connection.

→ Place a suitable open-end wrench on the body connection.
⚠ Do not screw on the body connection with a tool which may damage the body connection.

→ Screw actuator onto the valve body.
⚠ Observe tightening torque (see "Table 8").

⚠ WARNING!

Risk of injury due to non-observance of the tightening torque!

Non-observance of the tightening torque is hazardous as the device may be damaged.

▸ Observe tightening torque.

Orifice connection (valve body) [DN]	Tightening torque for body connection	
	[Nm]	[lbf ft]
10/15	45 ±3	33 ±2
20	50 ±3	37 ±2
25	60 ±3	44 ±2
32	65 ±3	48 ±2
40		
50	70 ±3	52 ±2
65	100 ±3	74 ±2
80	120 ±5	89 ±2
100	150 ±5	111 ±2

Table 8: Tightening torques for body connection

After Mounting:

→ Apply supply voltage.

valvesgo.com

MAN 1000274528 EN Version: C Status: RL (released | freigegeben) printed: 18.07.2026

12 ADJUSTING THE POSITION CONTROL – RUNNING X.TUNE

After monting the actuator, run the X.TUNE function.

ATTENTION!

Do not run X.TUNE without requirement!
The X.TUNE function must be run again only when the actuator has been removed afterwards or the valve body has been changed.

When the X.TUNE function is run, the position control is adjusted to the physical stroke of the actuating element used.

WARNING!

Danger due to uncontrolled process after running the X.TUNE function.

If the X.TUNE is run under medium pressure, the controller will be incorrectly adjusted. This will result in an uncontrolled process.

- Never run the X.TUNE under medium pressure.
- Secure system against unintentional activation.

12.1 Adjustment the position control using the buttons in the device

The 2 buttons for running the X.TUNE are located under the dummy cover.

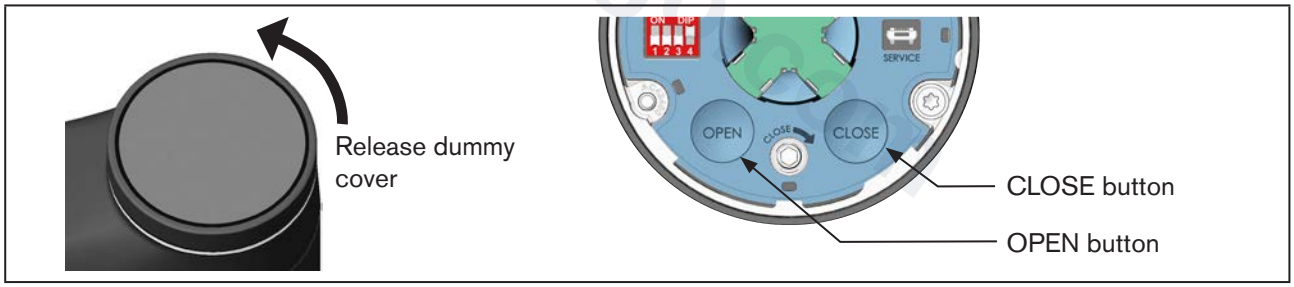

Figure 23: Adjustment of the position controll using the buttons in the device

Removing dummy cover:

Devices with ATEX approval or IECEx approval are secured with a magnetic lock.
The removal of the cover is described in the additional manual for electromotive control valves with ATEX approval and IECEx approval.

→ To release, rotate the dummy cover counter-clockwise and remove.

Running the X.TUNE function:

Ensure that no medium pressure is applied!
Do not run the X.TUNE unless it is absolutely essential.

→ Simultaneously hold down the OPEN and CLOSE buttons for 5 s.

When the X.TUNE is running, the LED illuminated ring is lit orange.
When the X.TUNE ends, the LED illuminated ring is reset to its previous status.

valvesgo.com

12.2 Adjustment position control on the PC or display of the device

The setting is made on the PC via the büS Service interface and by using the "Bürkert-Communicator" PC software. To do this, the USB büS interface set, available as an accessory, is required.

Display operation: Key functions

select, activate	confirm	back

To run the X.TUNE function, you must change to the detailed view maintenance for position controller.

Changing from View 1 to the detailed view:

→ When setting with Bürkert-Communicator in the navigation area, select **Position controller** and switch to MAINTENANCE.

→ When setting on the display switch from view 1 to CONFIGURATION, select **Position controller** and switch to MAINTENANCE.

✓ You are in the detailed view maintenance.

Running the X.TUNE function:

⚠ Ensure that no medium pressure is applied!

→ Select CALIBRATION.

→ Select X.TUNE:
The following text appears: „Choose seal material (see type label)!

→ Select seal material.
The following question appears: “Do you really want to start the X.TUNE?
⚠ Do not start the X.TUNE unless it is absolutely essential to run the X.TUNE.

→ Start X.TUNE.

✓ The X.TUNE function is run.

If the X.TUNE is canceled due to an error, a message appears (see table below).

Possible messages when X.TUNE is canceled	Description
There are device errors.	There is an error which is preventing X.TUNE from running.
Time limit exceeded	The X.TUNE could not be run within the time limit due to an error.
Motor current is too high.	The motor current is too large for running the X.TUNE function.
Lower end position of the valve is not detected.	The lower end position of the valve cannot be detected by the position sensor.

Table 9: Possible error message following cancellation of the X.TUNE function

MAN 1000274528 EN Version: C Status: RL (released | freigegeben) printed: 18.07.2026

valvesgo.com

13 REPLACEMENT OF THE ENERGY PACK

WARNING!

Risk of injury due to improper installation work.

- The actuator may be opened only by trained technicians and with the appropriate tools.

CAUTION!

Risk of injury due to electric shock.

- Before removing the SAFEPOS energy-pack, switch off the supply voltage.
- Completely drain SAFEPOS energy-pack. Wait until the LED illuminated ring goes out; the LED status must not be in **LED off** mode.

Setting the LED mode is described in the operating instructions at www.burkert.com.

13.1 Required work steps

The SAFEPOS energy-pack is located in the actuator housing. The following steps are required to replace the SAFEPOS energy pack:

1. Switch off the supply voltage. Wait until LED illuminated ring goes out.
2. Open the actuator housing
   Devices without fieldbus gateway, chapter "13.3" on page 42.
   Device with fieldbus gateway, chapter "13.4" on page 44.
3. Replacing the SAFEPOS energy-pack, chapter "13.5" on page 46:
4. Close the actuator housing
   Devices without fieldbus gateway, chapter "13.6" on page 47.
   Device with fieldbus gateway,, chapter "13.7" on page 49.
5. Apply supply voltage.

13.2 Required tools and equipment

- Key for hexalobular-internal screw T10
- Key for hexalobular-internal screw T20
- Key for hexalobular-internal screw T25
- Allen key, width across flats 3 mm

MAN 1000274528 EN Version: C Status: RL (released | freigegeben) printed: 18.07.2026

valvesgo.com

13.3 Opening the actuator housing for device without fieldbus gateway

Precondition: Supply voltage switched off.

WARNING!

Risk of injury due to improper installation work.

▸ The actuator may be opened only by trained technicians and with the appropriate tools.

Removing the display module or dummy cover:

NOTE!

Carefully remove display module ensuring that the connection cable and the HMI interface are not damaged.

Devices with ATEX approval or IECEx approval are secured with a magnetic lock.
The removal of the cover is described in the additional manual for electromotive control valves with ATEX approval and IECEx approval.



Figure 24: Removing dummy cover or display module

→ To release the display module or the dummy cover, rotate counter-clockwise and remove.
⚠ On the display module pay attention to the connection cable leading to the HMI interface!

→ For devices with display module disconnect the connection cable from the HMI interface.

Removing LED and storage module:

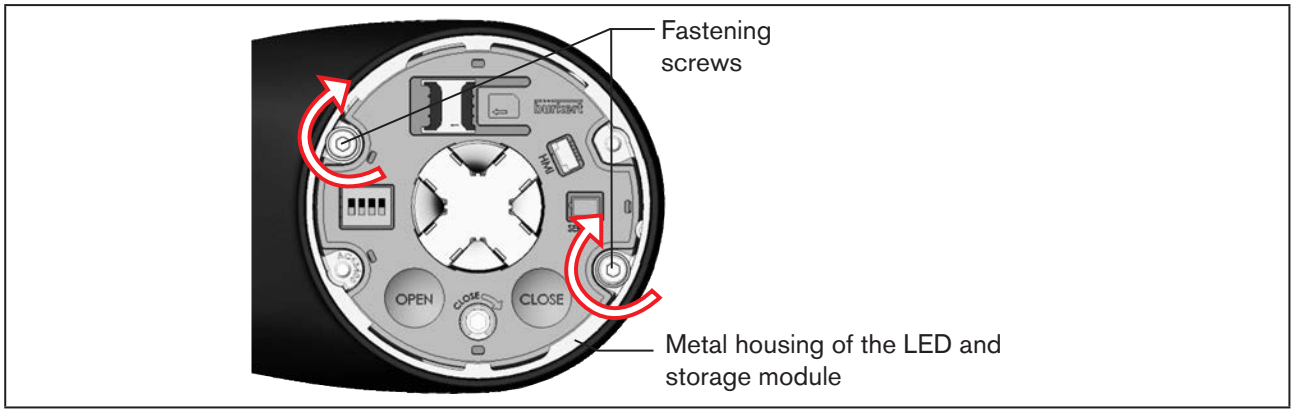

Figure 25: Removing LED and storage module

MAN 1000274528 EN Version: C Status: RL (released | freigegeben) printed: 18.07.2026

valvesgo.com

→ Remove the 2 fastening screws (hexalobular-internal screws T20).

→ Take hold of the LED and storage module on both sides of the metal housing and lift out.

Removing actuator cover:

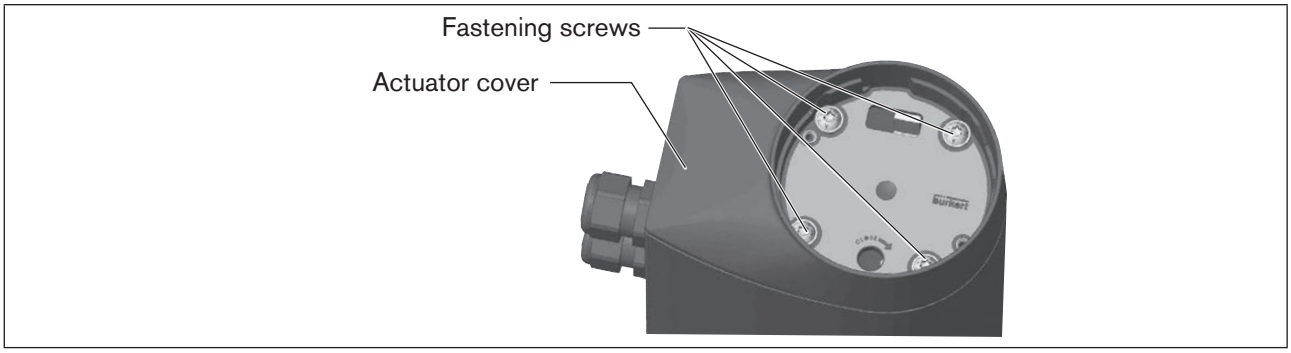

Figure 26: Removing actuator cover

→ Loosen the 4 fastening screws (hexalobular-internal screws T25).
The screws are integrated in the actuator cover to prevent them from falling out.

→ Remove actuator cover.

valvesgo.com

MAN 1000274528 EN Version: C Status: RL (released | freigegeben) printed: 18.07.2026

valvesgo.com

13.4 Opening the actuator housing for device with fieldbus gateway

Precondition: Supply voltage switched off.

WARNING!

Risk of injury due to improper installation work.

▸ The actuator may be opened only by trained technicians and with the appropriate tools.

Removing the display module or dummy cover:

NOTE!

Carefully remove display module ensuring that the connection cable and the HMI interface are not damaged.

Devices with ATEX approval or IECEx approval are secured with a magnetic lock.
The removal of the cover is described in the additional manual for electromotive control valves with ATEX approval and IECEx approval.



Figure 27: Removing dummy cover or display module

→ To release the display module or the dummy cover, rotate counter-clockwise and remove.
⚠ On the display module pay attention to the connection cable leading to the HMI interface!

→ For devices with display module disconnect the connection cable from the HMI interface.

MAN 1000274528 EN Version: C Status: RL (released | freigegeben) printed: 18.07.2026

valvesgo.com

Removing fieldbus gateway:

NOTE!

The fieldbus gateway may be removed only when it is deenergised, otherwise the device may be damaged.

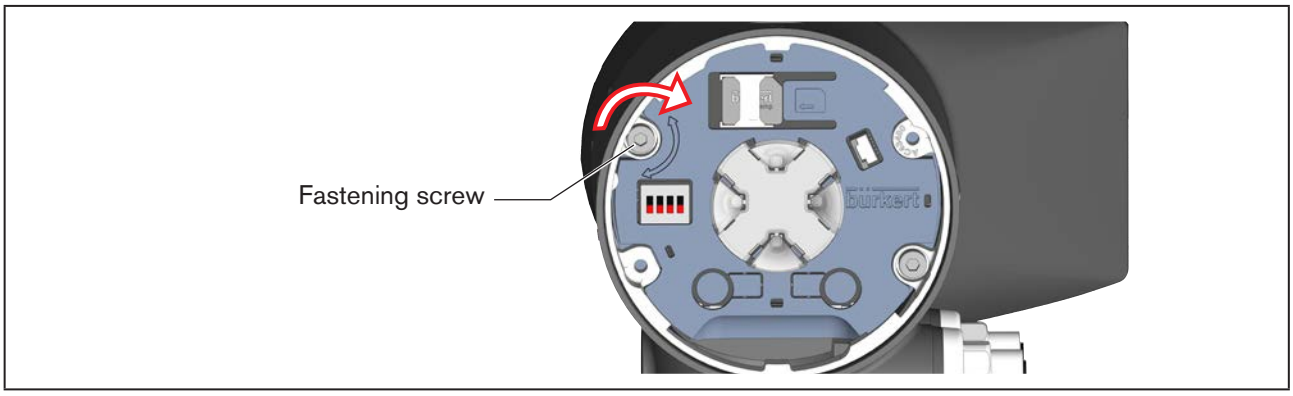

Figure 28: Removing fieldbus gateway

→ Remove fastening screw (socket head screw, width across flats 3 mm).

NOTE!

Caution when removing the fieldbus gateway. Fieldbus gateway and actuator are connected to each other by a cable.

→ To release the fieldbus gateway, turn it counterclockwise and carefully remove it.

→ Disconnect connection cable from the fieldbus gateway.

Removing bayonet adapter:

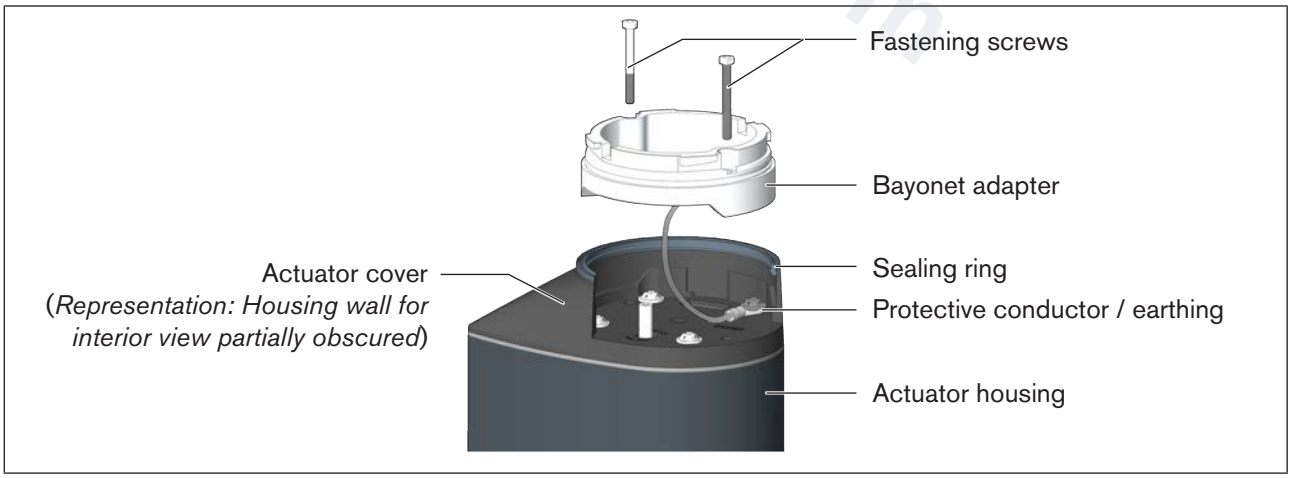

Figure 29: Removing bayonet adapter

→ Remove 2 fastening screws (hexalobular-internal screws T20).

→ Lift out bayonet adapter.
NOTE! The bayonet adapter is connected to the actuator cover by the earthing cable.
Bayonet adapter and actuator cover are removed together from the actuator.

valvesgo.com

Removing actuator cover:

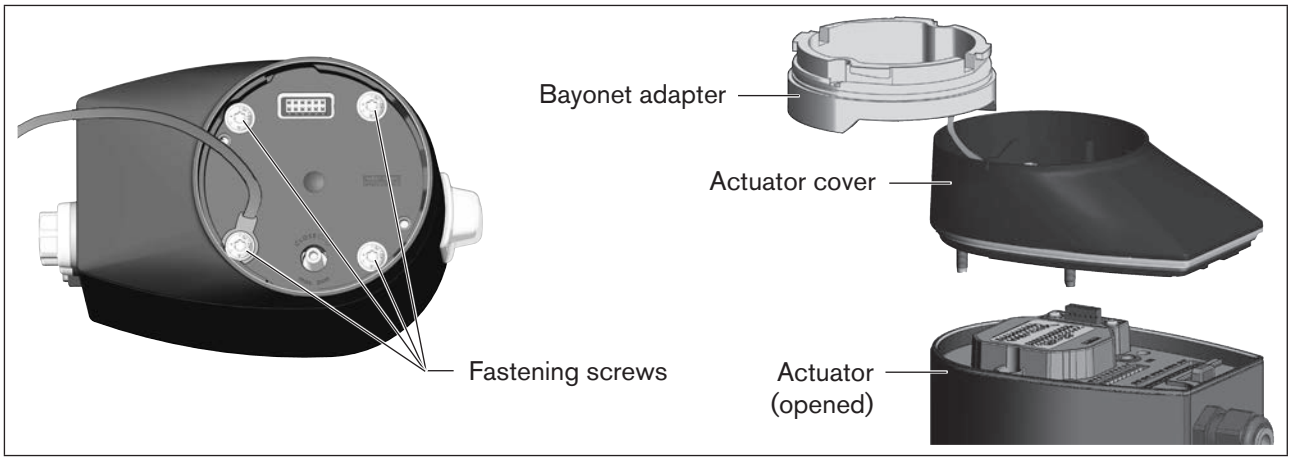

Figure 30: Removing actuator cover

→ Remove 4 fastening screws (hexalobular-internal screws T25).
The screws are integrated securely in the actuator cover.

→ Remove actuator cover and bayonet adapter.

13.5 Replacing the SAFEPOS energy-pack

Precondition: Actuator housing opened, power supply switched off.

Removing SAFEPOS energy pack:

NOTE!

Removal while the supply voltage is applied may result in data loss.

▸ Remove SAFEPOS energy pack only when the power supply is switched off.

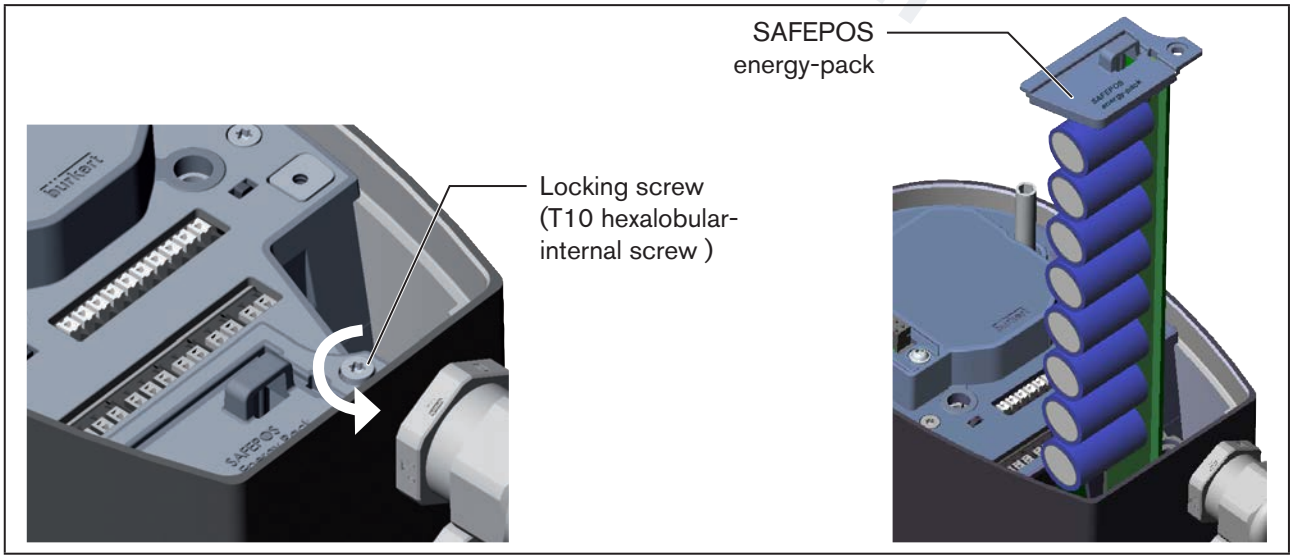

Figure 31: Removing the SAFEPOS energy-pack

→ Loosen locking screw (T10 hexalobular-internal screw).

→ Completely pull out SAFEPOS energy-pack on the bracket.

MAN 1000274528 EN Version: C Status: RL (released | freigegeben) printed: 18.07.2026

valvesgo.com

Inserting new SAFEPOS energy pack:

→ Take SAFEPOS energy-pack out of the transport packaging.

→ Insert SAFEPOS energy-pack into the two guiding grooves and push in all the way.

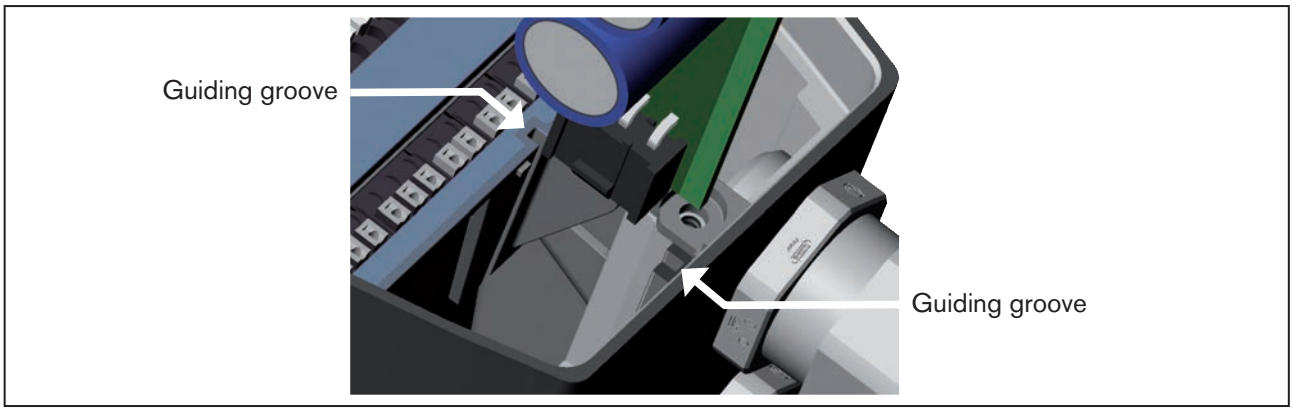

Figure 32: Inserting the SAFEPOS energy-pack

→ Tighten locking screw (T10 hexalobular-internal screw).
Observe tightening torque 1.1 Nm!

Next steps:

- Close the actuator housing,
  Devices without fieldbus gateway, chapter "13.6" on page 47.
  Device with fieldbus gateway, chapter "13.7" on page 49.
- Apply supply voltage.

13.6 Closing the actuator housing for device without fieldbus gateway

Mounting actuator cover:

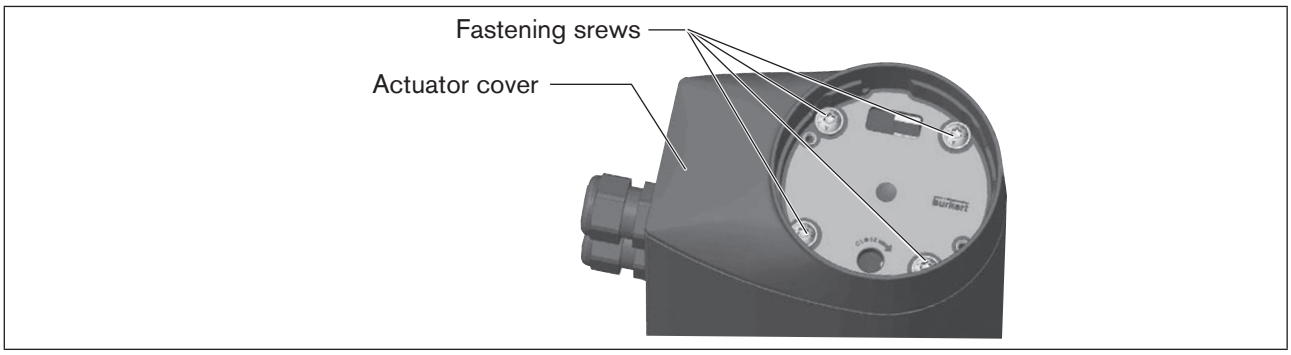

Figure 33: Mounting actuator cover

→ Place actuator cover on the actuator housing.

→ Slightly screw in the 4 fastening screws (T25 hexalobular-internal screws) crosswise, firstly by hand and then tighten. Observe tightening torque 5 Nm!

MAN 1000274528 EN Version: C Status: RL (released | freigegeben) printed: 18.07.2026

valvesgo.com

Mounting LED and storage module:

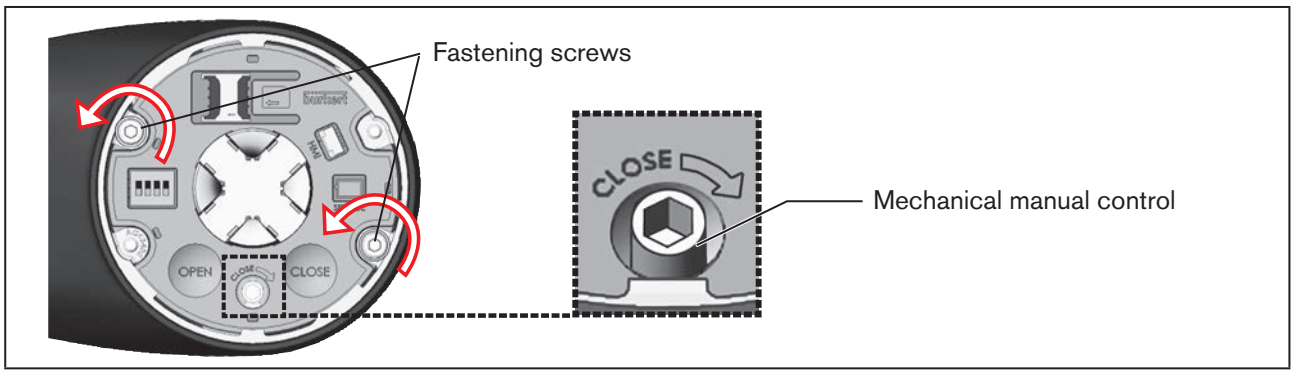

Figure 34: Mounting LED and storage module

→ Position LED and storage module on the actuator cover
(centre the round recess in the LED and storage module on the mechanical manual override).

→ Tighten 2 fastening screws (hexalobular-internal screws T20).
Observe tightening torque 1.1 Nm!

Closing display module or dummy cover:

Devices with ATEX approval or IECEx approval are secured with a magnetic lock.

Closing the cover is described in the supplementary instructions for the electromotive control valves with ATEX approval and IECEx approval.

NOTE!

For devices with display module
Before mounting the display, check whether the cable is correctly connected to the HMI interface.

→ For devices with display module, connect the connection cable to the HMI interface.

→ Mount display module or the dummy cover and turn clockwise until the 2 marks (one vertical line on the display module or dummy cover and on the actuator) are vertically aligned.

MAN 1000274528 EN Version: C Status: RL (released | freigegeben) printed: 18.07.2026

valvesgo.com

13.7 Closing the actuator housing for device with fieldbus gateway

Precondition: Supply voltage switched off.

Mounting actuator cover:

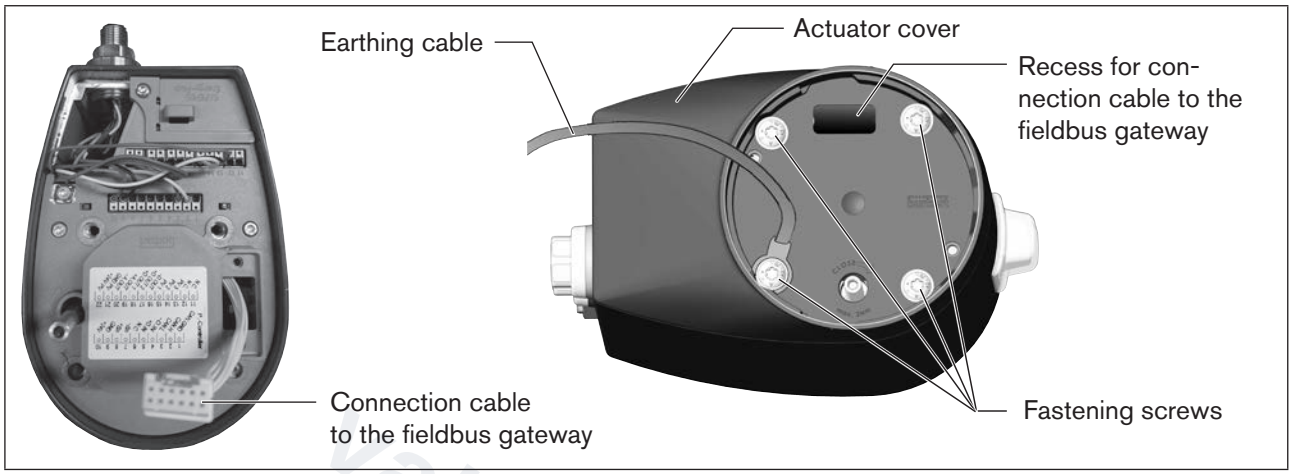

Figure 35: **Mounting actuator cover**

→ Feed connection cable to the fieldbus gateway through the recess in the actuator cover.

→ Position actuator cover on the actuator housing.
NOTE: The earthing cable, which is attached to the bayonet adapter, must be connected to one of the fastening screws in the actuator cover.

→ Tighten 4 fastening screws (hexalobular-internal screws T25).
Observe tightening torque 5 Nm!

Mounting bayonet adapter:

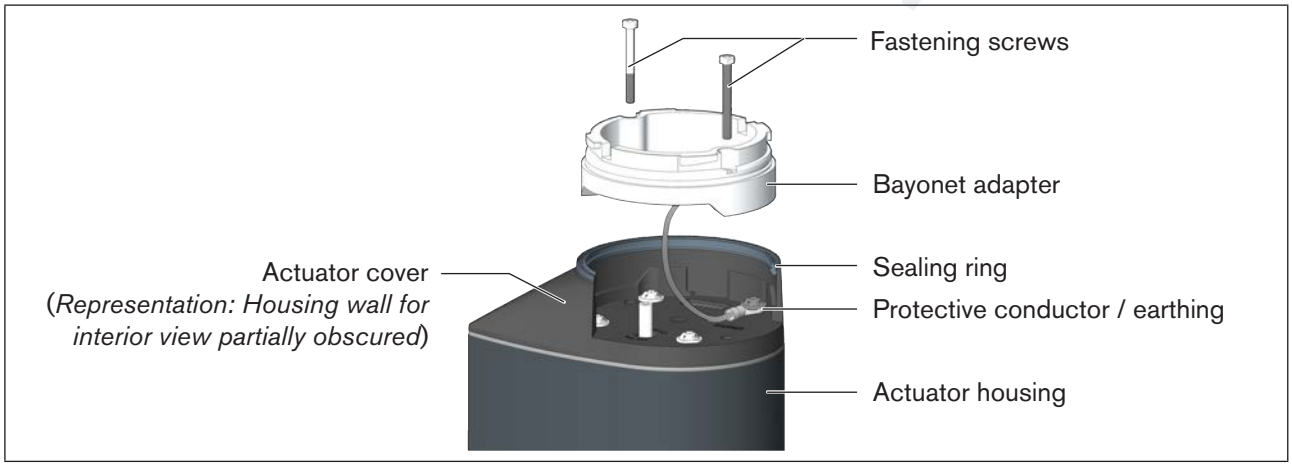

Figure 36: Mounting bayonet adapter

→ Position bayonet adapter on the actuator cover
NOTE! The sealing ring in the actuator housing must be close-fitting.

→ Tighten 2 fastening screws (hexalobular-internal screws T20)
Observe tightening torque 1.1 Nm!

MAN 1000274528 EN Version: C Status: RL (released | freigegeben) printed: 18.07.2026

valvesgo.com

Mounting fieldbus gateway:

NOTE!

The fieldbus gateway may be mounted only when it is deenergised, otherwise the device may be damaged.

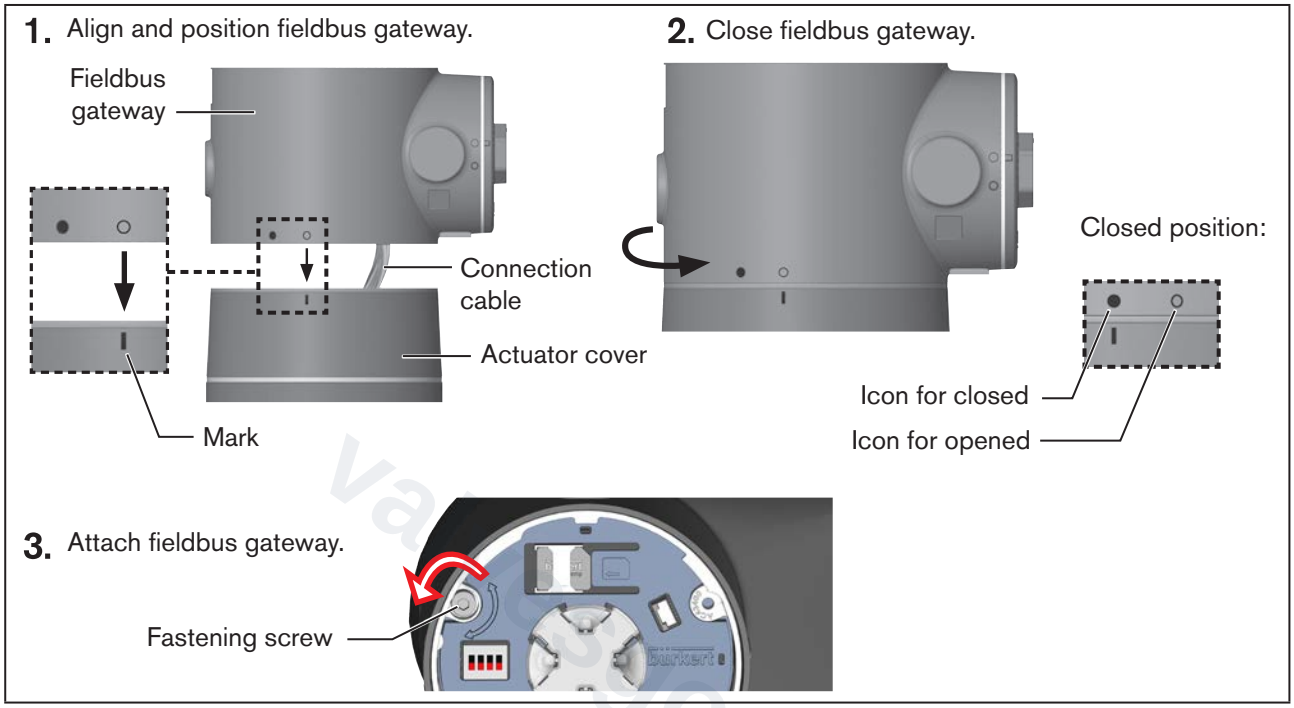

Figure 37: Mount fieldbus gateway.

→ Insert connection cable into the actuator on the fieldbus gateway.

→ Align and position fieldbus gateway on the actuator cover.
Centre the icon for opened over the mark on the actuator.

→ Manually turn fieldbus gateway clockwise until the icon for closed is positioned over the mark.

→ Tighten fastening screw (socket head screw, width across flats 3 mm).
Observe tightening torque 1.1 Nm!

Closing display module or dummy cover:

Devices with ATEX approval or IECEx approval are secured with a magnetic lock.

Closing the cover is described in the supplementary instructions for the electromotive control valves with ATEX approval and IECEx approval.

NOTE!

For devices with display module
Before mounting the display, check whether the cable is correctly connected to the HMI interface.

→ For devices with display module, connect the connection cable to the HMI interface.

→ Mount display module or the dummy cover and turn clockwise until the 2 marks (one vertical line on the display module or dummy cover and on the fieldbus gateway) are vertically aligned.

MAN 1000274528 EN Version: C Status: RL (released | freigegeben) printed: 18.07.2026

valvesgo.com

14 ACCESSORIES, SPARE PARTS

CAUTION!

Risk of injury and/or damage due to the use of incorrect parts.

Incorrect accessories and unsuitable spare parts may cause injuries and damage the device and the surrounding area.

▸ Use original accessories and original spare parts from Bürkert only.

Accessories	Order number
Connection cable with M12 socket, 4-pole, (length 5 m) for operating voltage	918038
Connection cable with M12 socket, 8-pole, (length 2 m) for input and output signals	919061
Connection cable with M12 circular plug, 5-pole, (length 2 m) for input signals of process value (only for version with process controller)	559177
USB büS interface set:	
büS stick set 1 (including power supply, büS stick, load resistor, Y-distributor, 0.7 m cable with M12 plug)	772426
büS stick set 2 (including büS stick, load resistor, Y-distributor, 0.7 m cable with M12 plug)	772551
büS adapter for büS Service interface (M12 to büS Service interface micro USB)	773254
büS cable extensions from M12 plug to M12 socket	
Connection cable, length 1 m	772404
Connection cable, length 3 m	772405
Connection cable, length 5 m	772406
Connection cable, length 10 m	772407
Communicator	Information at www.burkert.com.
SIM card	291773
Holding device for line connection DN15 to DN20	693770
Holding device for line connection DN25 to DN50	693771
Display module made of plastic	277869
Dummy cover made of plastic	277881

Table 10: Accessories

MAN 1000274528 EN Version: C Status: RL (released | freigegeben) printed: 18.07.2026

valvesgo.com

valvesgo.com

14.1 Communications software

The PC software "Bürkert Communicator" is designed for communication with Bürkert devices.

A detailed description of installation and operation of the PC software can be found in the associated operating instructions.

Download the software from: www.burkert.com

14.1.1 USB interface

The PC requires a USB interface for communication with the devices, also an adapter with interface driver (see "Table 10: Accessories").

valvesgo.com

MAN 1000274528 EN Version: C Status: RL (released | freigegeben) printed: 18.07.2026

14.2 Spare parts

14.2.1 Spare parts for control valves of Types 3360 and 3361

Spare parts for Types 3360 and 3361			Order number
SAFEPOS energy-pack			285834
Seal set for packing gland	Spindle ø10 mm, DN15...DN20		285685
	Spindle ø14 mm, DN25...DN50		285722
VA spindle guide for packing gland	Spindle ø10 mm	Body DN15	246577
		Body DN20	246578
	Spindle ø14 mm	Body DN25	246579
		Body DN32	246583
		Body DN40	246593
		Body DN50	246594

Table 11: Spare parts for Types 3360 and 3361

14.2.2 Spare parts for angle seat control valve of Type 3360

Control cone set for Type 3360 contains: control cone, dowel pin, graphite seal			
Seat size of the valve	**Order number**		
	Steel/steel	**PTFE/steel**	**PEEK/steel**
13/15	170322	on request	on request
20	170323	170316	210135
25	170324	170318	120136
32	226925	226941	287822
40	225423	226 945	314787
50	225426	226 948	on request

Table 12: Control cone set for Type 3360

14.2.3 Spare parts for globe control valve of Type 3361

Control cone set for Type 3361 contains: control cone, dowel pin, graphite seal				
Seat size of the valve	**Orifice connection (valve body) [DN]**	**Order number**		
		Steel/steel	**PTFE/steel**	**PEEK/steel**
3	10/15	on request	–	–
4	10/15	149 934	–	–
6	10/15	152 696	on request	on request
8	10/15	149 935	on request	on request
10	10/15	149 912	on request	on request
	20	149 914	on request	on request

valvesgo.com

MAN 1000274528 EN Version: C Status: RL (released | freigegeben) printed: 18.07.2026

Control cone set for Type 3361 contains: control cone, dowel pin, graphite seal				
Seat size of the valve	Orifice connection (valve body) [DN]	Order number		
		Steel/steel	PTFE/steel	PEEK/steel
15	15	149915	on request	on request
	20	149916	on request	on request
	25	149917	on request	on request
20	20	149918	149946	231732
	25	149951	149947	292348
	32	226951	226963	301315
25	25	149953	149949	226723
	32	226952	226964	301317
	40	226954	226966	301319
32	32	226953	226965	301318
	40	226955	226967	301322
	50	226957	226969	301324
40	40	226956	226968	301323
	50	226958	226970	301369
50	50	226959	226971	272656

Table 13: Control cone set for Type 3361

Valve seat set for Type 3361 contains: valve seat, graphite seal		
Seat size of the valve	Orifice connection (valve body) [DN]	Order number
3	10/15	284777
4	10/15	262143
6	10/15	262146
8	10/15	262147
10	10/15	262149
	20	262151
15	15	262152
	20	262153
	25	262155
20	20	262157
	25	262160
	32	262163
25	25	262170
	32	262171
	40	262173

valvesgo.com

MAN 1000274528 EN Version: C Status: RL (released | freigegeben) printed: 18.07.2026

Valve seat set for Type 3361 contains: valve seat, graphite seal		
Seat size of the valve	**Orifice connection (valve body) [DN]**	**Order number**
32	32	262174
	40	262175
	50	262176
40	40	262177
	50	262178
50	50	262179

Table 14: Valve seat set for Type 3361

14.3 Installation tools

14.3.1 Installation tools for control valves of Types 3360 and 3361

Modified socket wrench for packing gland			
Spindle ø [mm]	**Orifice connection (valve body) [DN]**	**Wrench size**	**Order number**
10	15	SW19	683 220
10	20	SW21	683 222
14	25...50	SW21	683 223

Table 15: Installation tools for Types 3360 and 3361

14.3.2 Installation tools for control valves of Type 3361

Installation tool for replacing valve seat	
Orifice connection (valve body) [DN]	**Order number**
15	652604
20	652605
25	652606
32	652607
40	652608
50	652609
65	655562
80	655563
100	655564

Table 16: Installation tools for Type 3361

MAN 1000274528 EN Version: C Status: RL (released | freigegeben) printed: 18.07.2026

valvesgo.com

15 PACKAGING, TRANSPORT

NOTE!

Transport damage.

Inadequately protected devices may be damaged during transportation.

- Protect the device against moisture and dirt in shock-resistant packaging during transportation.
- Prevent the temperature from exceeding or dropping below the permitted storage temperature.

CAUTION!

Risk of injury due heavy devices!

- ▸ During transport or during assembly, the device may fall and cause injury.
- ▸ Do not transport, install or remove heavy devices without the aid of a second person and using suitable auxiliary equipment.
- ▸ Use appropriate tools.

16 STORAGE

NOTE!

Incorrect storage may damage the device.

- Store the device in a dry and dust-free location!
- Storage temperature: -40 to +70 °C.

17 DISPOSAL

NOTE!

Damage to the environment caused by parts contaminated with media.

- Dispose of the device and packaging in an environmentally friendly manner!
- Observe applicable disposal and environmental regulations.

Observe the national waste disposal regulations.

MAN 1000274528 EN Version: C Status: RL (released | freigegeben) printed: 18.07.2026

valvesgo.com

bürkert
FLUID CONTROL SYSTEMS

MAN 1000274528 EN Version: C Status: RL (released | freigegeben) printed: 18.07.2026

valvesgo.com

www.burkert.com