bürkert
FLUID CONTROL SYSTEMS

# Pneumatically operated 2/2-way globe valve CLASSIC

- Compact
- Long service life
- Robust actuators with modular accessory program
- Stainless steel housing with flange, thread and weld end connection

Product variants described in the data sheet may differ from the product presentation and description.

## Can be combined with

**Type 8640**
Modular valve island for pneumatics

**Type 8644**
AirLINE SP electropneumatic automation system

**Type 8697**
Pneumatic control unit for decentralised automation of process valves ELEMENT

**Type 7012**
Direct-acting 3/2-way plunger valve

**Type 6014**
Plunger valve 3/2-way direct-acting

**Type 8840**
Modular process valve cluster – distributor and collector

## Type description

The externally piloted globe valve consists of a pneumatically operated piston actuator and a 2/2-way valve body. The actuator is made of PA or, for special operating conditions, PPS. The reliable self-adjusting packing gland provides high sealing integrity. These maintenance-free and robust valves can be retro-fitted with a comprehensive range of accessories for position indication, stroke limitation or manual override.

valvesgo.com

DTS 1000010970 EN Version: AS Status: RL (released | freigegeben | valide) printed: 28.07.2026


© Christian Bürkert GmbH & Co. KG, Subject to alteration


valvesgo.com

## Table of contents


**1. General technical data** 4

**2. Product variants** 5

2.1. Stainless steel body with PA actuator 5
2.2. Stainless steel body with PPS actuator 5

**3. Control functions** 6

**4. Approvals and conformities** 7

4.1. General notes 7
4.2. Conformity 7
4.3. Standards 7
4.4. Explosion protection 7
4.5. Drinking water 7
4.6. Foods and beverages/Hygiene 8
4.7. Others 8
DNV GL classification 8
Oxygen 8
Fuel gases 8
TA Luft 8

**5. Materials** 9

5.1. Bürkert resistApp 9
5.2. Material specifications 10

**6. Dimensions** 11

6.1. Actuator 11
Globe valve Type 2012 and valve system on/off CLASSIC Type 8801-GA 11
6.2. Body with flange connection 12
6.3. Body with threaded connection 13
6.4. Body with welded connection 14

**7. Performance specifications** 15

7.1. Fluidic data 15
Overview of fluidic data for flow below seat (for liquids, steam and gases) 15
Pilot pressure diagrams with flow direction below seat (control function B) 16
Overview of fluidic data with flow above seat (for gases and steam) 17
Pilot pressure diagram for flow direction above seat (control function A) 18
7.2. Operating limits 19
Operating limits for medium temperature and operating pressure 19
Operating limits for ambient and medium temperature 20
Operating limits for optional variants 20

**8. Product accessories** 21

**9. Networking and combination with other Bürkert products** 22


DTS 1000010970 EN Version: AS Status: RL (released | freigegeben | valide) printed: 28.07.2026



valvesgo.com

**10. Ordering information** 23

10.1. Bürkert eShop ....23
10.2. Bürkert product filter ....23
10.3. Bürkert Product Enquiry Form ....23
10.4. Ordering chart flange connection ....24
Valves with flow direction below seat ....24
Valves with flow direction above seat ....25
10.5. Ordering chart thread connection ....26
Valves with flow direction below seat ....26
Valves with flow direction above seat ....27
10.6. Ordering chart welded connection ....28
Valves with flow direction below seat ....28
Valves with flow direction above seat ....30
10.7. Ordering chart accessories ....31
Accessories for 3/2-way pilot valve with banjo bolts ....31

DTS 1000010970 EN Version: AS Status: RL (released | freigegeben | valide) printed: 28.07.2026

valvesgo.com



valvesgo.com

# 1. General technical data

| | |
|---|---|
| **Product properties** | |
| Dimensions | Further information can be found in chapter "6. Dimensions" on page 11. |
| Material | Further information can be found in chapter "5. Materials" on page 9. |
| Design | Globe valve |
| Nominal diameter (port connection) | DN 10...DN 100, NPS ⅜...NPS 4 |
| Safety setting in case of power failure | Normally closed (control function A), normally open (control function B) |
| Flow direction | Flow to open (below seat), flow to close (above seat) |
| **Performance data** | |
| Operating pressure | 0...25 bar(g), vacuum...- 0.9 bar(g) (option) (see "7.1. Fluidic data" on page 15) |
| Nominal pressure | PN 25 (DIN EN 1333), Class 150 (DIN EN 1759) |
| Pilot pressure | 2...10 bar(g) (see "7.1. Fluidic data" on page 15) |
| Seat leakage | Leakage rate A (DIN EN 12266 - 1), seat seal PTFE and PEEK, test medium air |
| $K_V$ value | 4.7...165 m³/h (see "7.1. Fluidic data" on page 15) |
| **Medium data** | |
| Medium | Steam, water, neutral gases, alcohols, oils, fuels, hydraulic fluids, salt solutions, alkalis, organic solvents, oxygen and fuel gases of families I, II and III in accordance with the Gas Appliances Regulation (EU) 2016/426 |
| Medium temperature | - 40 °C...+ 230 °C (see "7.2. Operating limits" on page 19) |
| Viscosity | Max. 600 mm²/s |
| Control medium | Air, neutral gases |
| **Product connections** | |
| **Port connection** | |
| Flange connection | DIN EN 1092 - 1<br>ANSI B 16.5<br>JIS 10K |
| Threaded connection | G (DIN ISO 228 - 1)<br>NPT (ASME B1.20.1)<br>RC (ISO 7 - 1) |
| Welded connection | DIN EN ISO 1127 / ISO 4200 / DIN 11866 series B<br>DIN 11850 - 2 / DIN 11866 series A<br>ASME BPE / DIN 11866 series C<br>SMS 3008 |
| Clamp connection | DIN 32676 series B (pipe: ISO 4200)<br>DIN 32676 series A (pipe: DIN 11850 - 2)<br>ASME BPE |
| **Pilot air port** | |
| Actuator size Ø 40 (C) | Thread G ⅛ |
| Actuator size Ø 50 (D)...225 (L) | Thread G ¼ |
| **Approvals and conformities** | |
| Further information can be found in chapter "4. Approvals and conformities" on page 7. | |
| Material certificate | 2.2, 3.1 |
| **Environment and installation** | |
| Environmental factors | Protect the device from electromagnetic interference, UV radiation and, when used outdoors, from weather conditions. |
| Ambient temperature | - 10 °C...+ 140 °C (see "2. Product variants" on page 5) |
| Degree of protection | IP67 |
| Installation position | As required, preferably with actuator in upright position |

DTS 1000010970 EN Version: AS Status: RL (released | freigegeben | valide) printed: 28.07.2026

valvesgo.com



valvesgo.com

# 2. Product variants

## 2.1. Stainless steel body with PA actuator

| Performance data | |
|---|---|
| **Maximum pilot pressure** | |
| Actuator size 40 (C), 50 (D), 63 (E), 80 (F) | 10 bar(g) |
| Actuator size 100 (G), 125 (H) | 7 bar(g) |
| Actuator size 175 (K), 225 (L) | 6 bar(g) |
| **Medium data** | |
| Medium temperature | - 10 °C...+ 185 °C (see "7.2. Operating limits" on page 19) |
| **Environment and installation** | |
| **Ambient temperature** | |
| Actuator size 40 (C)...125 (H) | - 10 °C...+ 60 °C |
| Actuator size 175 (K), 225 (L) | - 10 °C...+ 50 °C<br>(see "7.2. Operating limits" on page 19) |

## 2.2. Stainless steel body with PPS actuator

| Performance data | |
|---|---|
| **Maximum pilot pressure** | |
| Actuator size 40 (C), 50 (D), 63 (E), 80 (F), | 10 bar(g) |
| Actuator size 100 (G), 125 (H) | 7 bar(g) |
| **Medium data** | |
| Medium temperature | - 40 °C...+ 230 °C<br>(see "7.2. Operating limits" on page 19) |
| **Environment and installation** | |
| Ambient temperature | + 5 °C...+ 140 °C (continuous operation...+ 130 °C)<br>(see "7.2. Operating limits" on page 19) |

DTS 1000010970 EN Version: AS Status: RL (released | freigegeben | valide) printed: 28.07.2026



valvesgo.com

## 3. Control functions

**⚠ WARNING**

**Risk of damage due to bursting pipes and bursting equipment when the flow is above the seat.**
**In the case of liquid mediums, water hammer can occur causing pipes and the device to burst.**

Do not use valves with flow above the seat for liquid mediums.

| Symbol | Description | |
|---|---|---|
| **Flow direction below seat for liquids, steam and gases** | | |
| 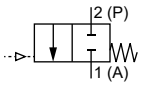 | **Control function A (CF A)**<br>Pneumatically operated 2/2-way on/off valve<br>Flow direction below seat<br>Normally closed by spring force | 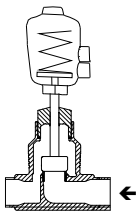 |
| 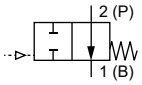 | **Control function B (CF B)**<br>Pneumatically operated 2/2-way on/off valve<br>Flow direction below seat<br>Normally opened by spring force | 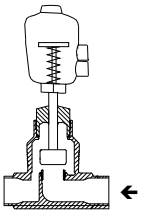 |
| **Flow direction above seat for steam and gases** | | |
| 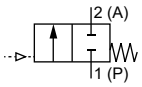 | **Control function A (CF A)**<br>Pneumatically operated 2/2-way on/off valve<br>Flow direction above seat<br>Normally closed by spring force | 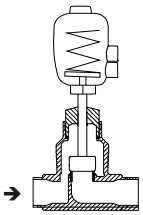 |

valvesgo.com

DTS 1000010970 EN Version: AS Status: RL (released | freigegeben | valide) printed: 28.07.2026



valvesgo.com

# 4. Approvals and conformities

## 4.1. General notes

- The approvals and conformities listed below must be stated when making enquiries. This is the only way to ensure that the product complies with all required specifications.
- Not all available variants can be supplied with the below mentioned approvals or conformities.

## 4.2. Conformity

In accordance with the Declaration of Conformity, the product is compliant with the EU Directives. This includes the following directives:

- Pressure Equipment Directive 2014/68/EU
- Machinery Directive 2006/42/EC

## 4.3. Standards

The applied standards which are used to demonstrate compliance with the EU Directives are listed in the EU-Type Examination Certificate and/or the EU Declaration of Conformity.

## 4.4. Explosion protection

| Approval | Description |
|---|---|
| | **Optional: Explosion protection (valid for the variable code PX51)**<br>As a category 2 device suitable for zone 1/21 and zone 2/22.<br><br>**ATEX:**<br>EPS 18 ATEX 2 008 X<br>II 2G Ex h IIC T4...T2 Gb<br>II 2D Ex h IIIC T135 °C...T300 °C Db<br><br>**IECEx:**<br>IECEx EPS 18.0007X<br>Ex h IIC T4...T2 Gb<br>Ex h IIIC T135 °C...T300 °C Db |

| Temperature class | T2 | T3 | T4 |
|---|---|---|---|
| Maximum surface temperature | + 300 °C | + 200 °C | + 135 °C |
| Ambient temperature | - 40 °C...+ 130 °C | - 40 °C...+ 130 °C | - 40 °C...+ 100 °C |
| Maximum medium temperature | + 285 °C | + 185 °C | + 125 °C |

**Note:** The ambient and medium temperature range may be limited by non-ex-relevant specifications. Observe the Operating Instructions.

## 4.5. Drinking water

| Conformity | Description |
|---|---|
| $H_2O$ | **Suitable for use in drinking water applications**<br>The materials comply with the assessment principles (UBA) for materials in contact with drinking water (TrinkwasserV).<br><br>**Stainless steel body**<br>PF39: Suitable for products with medium temperature up to 85 °C (hot water) |

DTS 1000010970 EN Version: AS Status: RL (released | freigegeben | valide) printed: 28.07.2026



valvesgo.com

## 4.6. Foods and beverages/Hygiene

| Conformity | Description |
|---|---|
| FDA | **FDA – Code of Federal Regulations (valid for the variable code PL02 , PL03)**<br>All wetted materials are compliant with the Code of Federal Regulations published by the FDA (Food and Drug Administration, USA) according to the manufacturer's declaration. |
| | **EC Regulation 1935/2004 of the European Parliament and of the Council (valid for the variable code PL01, PL02)**<br>All wetted materials are compliant with EC Regulation 1935/2004/EC according to the manufacturer's declaration. |
| | **China food GB Standards of the People's Republic of China (valid for the variable code PL10)**<br>All wetted materials are compliant with the requirement of China food GB Standards according to the manufacturer's declaration. |

## 4.7. Others

### DNV GL classification

| Approval | Description |
|---|---|
| TYPE APPROVED PRODUCT DNV DNV.COM/AF | **DNV GL classification – Ships, offshore units, and high speed and light craft**<br>The products are accepted for installation on all vessels classed by DNV GL. |

### Oxygen

| Conformity | Description |
|---|---|
| $O_2$ | **Optional: Suitability for oxygen (valid for the variable code NL02)**<br>The products are suitable for use with gaseous oxygen, according to the manufacturer's declaration. |

### Fuel gases

| Conformity | Description |
|---|---|
| CE | **Fuel gases (valid for the variable code PO19, PO20)**<br>The products comply with:<br>• Regulation (EU) 2016/426 – Appliances burning gaseous fuels and<br>• DVGW DIN EN 161 (Automatic shut-off valves for gas burners and gas appliances) and<br>• DIN EN 16678, Class A or Class D (Safety and control devices for gas burners and gas burning appliances – Automatic shut-off valves for operating pressure of above 500 kPa up to and including 6 300 kPa) |

### TA Luft

| Conformity | Description |
|---|---|
| TA Luft | **Technical instruction on air quality control (valid for the variable code PM01)** |

DTS 1000010970 EN Version: AS Status: RL (released | freigegeben | valide) printed: 28.07.2026



valvesgo.com

# 5. Materials

## 5.1. Bürkert resistApp

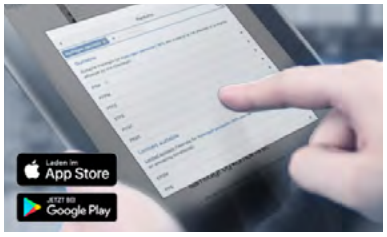


**Bürkert resistApp – Chemical resistance chart**

You want to ensure the reliability and durability of the materials in your individual application case? Verify your combination of media and materials on our website or in our resistApp.

Start chemical resistance check

DTS 1000010970 EN Version: AS Status: RL (released | freigegeben | valide) printed: 28.07.2026

valvesgo.com



valvesgo.com

## 5.2. Material specifications

### Actuator size 40...125 mm

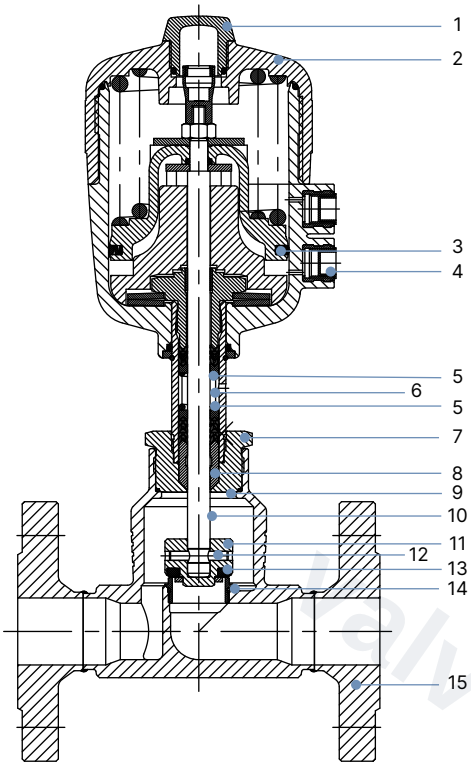


| No. | Element | Material | |
|---|---|---|---|
| | | Stainless steel body with PA actuator | Stainless steel body with PPS actuator |
| 1 | Transparent cover | PC | PSU |
| 2 | Actuator | PA | PPS |
| 3 | Piston seal | NBR | FKM |
| 4 | Pilot air ports | Stainless steel 1.4305 | |
| 5 | Spindle seal | PTFE V-Rings (filled), with spring compensation | |
| 6 | Spring | Stainless steel 1.4310 | |
| 7 | Pipe | Stainless steel 1.4401 or 316L | |
| 8 | Wiper | PTFE (filled), PEEK for actuator size 100 mm(G) and 125 mm(H) | |
| 9 | Body seal | Graphite, PTFE (option) | |
| 10 | Spindle | Stainless steel 1.4401 or 1.4404 | |
| 11 | Swivel plate | Stainless steel 1.4401 or 1.4404 | |
| 12 | Pin | Stainless steel 1.4401 | |
| 13 | Seat seal | PTFE, PEEK (option), NBR (option), FKM (option) | |
| 14 | Valve seat with O-Ring | Stainless steel 1.4571, EPDM | |
| 15 | Valve body | Stainless steel CF3M | |

### Actuator size 175 and 225 mm

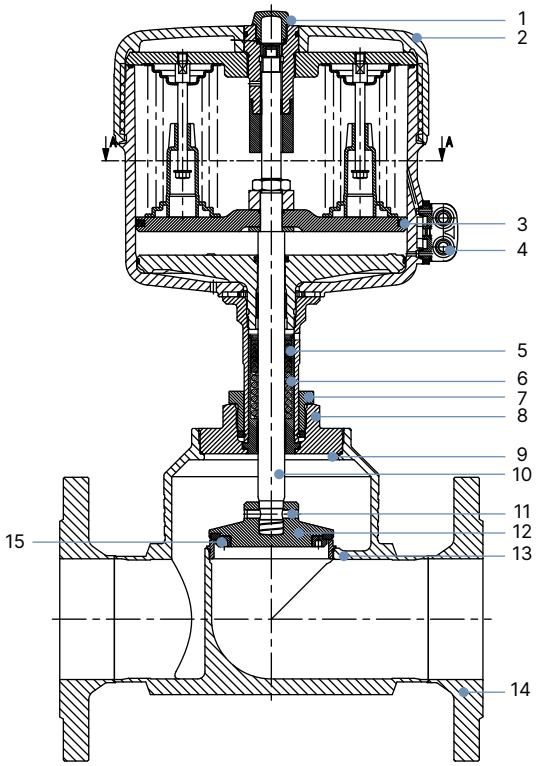


| No. | Element | Stainless steel body with PA actuator |
|---|---|---|
| 1 | Transparent cover | PC |
| 2 | Actuator | PA |
| 3 | Piston seal | NBR |
| 4 | Pilot air ports | Stainless steel 1.4305 |
| 5 | Spindle seal | PTFE V-Rings (filled), with spring compensation |
| 6 | Spring | Stainless steel 1.4568 |
| 7 | Screw | Stainless steel 1.4305 |
| 8 | Nipple | Stainless steel 1.4404 |
| 9 | Body seal | Graphite, PTFE (option) |
| 10 | Spindle | Stainless steel 1.4401 |
| 11 | Pin | Stainless steel 1.4401 |
| 12 | Swivel plate | Stainless steel 1.4401 |
| 13 | Seat seal | PTFE, PEEK (option), NBR (option), FKM (option) |
| 14 | Valve seat with O-ring | Stainless steel 1.4571, EPDM |
| 15 | Valve body | Stainless steel CF3M |

DTS 1000010970 EN Version: AS Status: RL (released | freigegeben | valide) printed: 28.07.2026


valvesgo.com

# 6. Dimensions

## 6.1. Actuator

**Globe valve Type 2012 and valve system on/off CLASSIC Type 8801-GA**

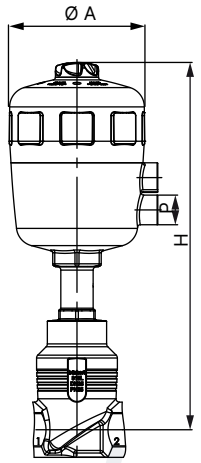


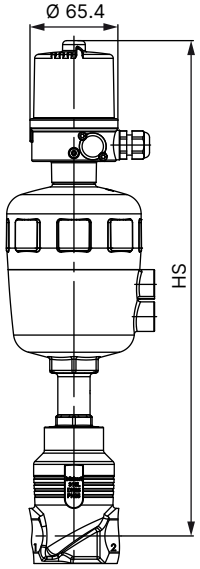


| Nominal diameter (port connection) | | Actuator size Ø | Ø A | H | P | HS |
|---|---|---|---|---|---|---|
| DN | NPS | [mm] | [mm] | [mm] | [inch] | [mm] |
| 10 | ⅜ | 40 (C) | 53 | 185 | G ⅛ | 281 |
| | | 50 (D) | 64 | 211 | G ¼ | 307 |
| | | 63 (E) | 80 | 253 | G ¼ | 349 |
| 15 | ½ | 40 (C) | 53 | 185 | G ⅛ | 281 |
| | | 50 (D) | 64 | 211 | G ¼ | 307 |
| | | 63 (E) | 80 | 253 | G ¼ | 349 |
| 20 | ¾ | 40 (C) | 53 | 187 | G ⅛ | 283 |
| | | 50 (D) | 64 | 214 | G ¼ | 310 |
| | | 63 (E) | 80 | 248 | G ¼ | 344 |
| | | 80 (F) | 101 | 270 | G ¼ | 366 |
| 25 | 1 | 50 (D) | 64 | 220 | G ¼ | 316 |
| | | 63 (E) | 80 | 251 | G ¼ | 347 |
| | | 80 (F) | 101 | 273 | G ¼ | 369 |
| 32 | 1¼ | 63 (E) | 80 | 272 | G ¼ | 368 |
| | | 80 (F) | 101 | 294 | G ¼ | 390 |
| | | 125 (H) | 157 | 390 | G ¼ | 483 |
| 40 | 1½ | 80 (F) | 101 | 299 | G ¼ | 395 |
| | | 125 (H) | 157 | 395 | G ¼ | 488 |
| 50 | 2 | 80 (F) | 101 | 309 | G ¼ | 405 |
| | | 100 (G) | 127 | 371 | G ¼ | 464 |
| | | 125 (H) | 157 | 400 | G ¼ | 493 |
| 65 | 2½ | 125 (H) | 157 | 429 | G ¼ | 522 |
| | | 175 (K) | 211 | 491 | G ¼ | 590 |
| | | 225 (L) | 261 | 486 | G ¼ | 585 |
| 80 | 3 | 125 (H) | 157 | 438 | G ¼ | 531 |
| | | 175 (K) | 211 | 498 | G ¼ | 597 |
| | | 225 (L) | 261 | 494 | G ¼ | 593 |
| 100 | 4 | 125 (H) | 157 | 449 | G ¼ | 542 |
| | | 175 (K) | 211 | 508 | G ¼ | 607 |
| | | 225 (L) | 261 | 504 | G ¼ | 603 |

DTS 1000010970 EN Version: AS Status: RL (released | freigegeben | valide) printed: 28.07.2026


valvesgo.com

## 6.2. Body with flange connection

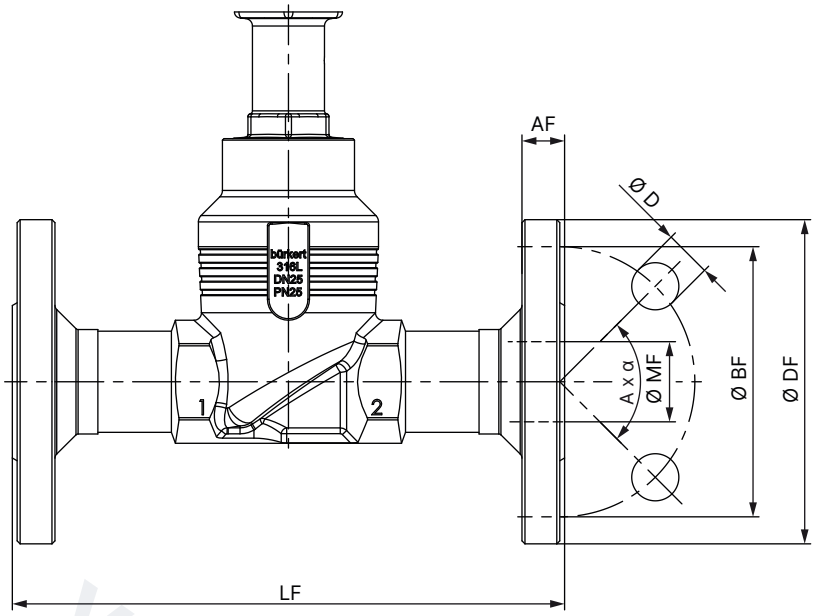


| Nominal diameter (port connection) | DIN EN 1092 PN 25 FTF 1 according to DIN EN 558 - 1 | | | | | | | JIS 10K FTF 10 according to DIN EN 558 - 2 | | | | | | |
|---|---|---|---|---|---|---|---|---|---|---|---|---|---|---|
| DN | Ø DF | LF | Ø BF | AF | Ø D | A x α | Ø MF | Ø DF | LF | Ø BF | AF | Ø D | A x α | Ø MF |
| 10 | 90 | 130 | 60 | 16 | 14 | 4 × 90° | 13.6 | – | – | – | – | – | – | – |
| 15 | 95 | 130 | 65 | 16 | 14 | 4 × 90° | 18.1 | 95 | 108 | 70 | 12 | 15 | 4 × 90° | 18.1 |
| 20 | 105 | 150 | 75 | 18 | 14 | 4 × 90° | 23.7 | 100 | 117 | 75 | 14 | 15 | 4 × 90° | 23.7 |
| 25 | 115 | 160 | 85 | 18 | 14 | 4 × 90° | 29.7 | 125 | 127 | 90 | 14 | 19 | 4 × 90° | 29.7 |
| 32 | 140 | 180 | 100 | 18 | 18 | 4 × 90° | 38.4 | 135 | 140 | 100 | 16 | 19 | 4 × 90° | 38.4 |
| 40 | 150 | 200 | 110 | 18 | 18 | 4 × 90° | 44.3 | 140 | 165 | 105 | 16 | 19 | 4 × 90° | 44.3 |
| 50 | 165 | 230 | 125 | 20 | 18 | 4 × 90° | 56.3 | 155 | 203 | 120 | 16 | 19 | 4 × 90° | 56.3 |
| 65 | 185 | 290 | 145 | 22 | 18 | 8 × 45° | 66.0 | 175 | 216 | 140 | 18 | 19 | 4 × 90° | 71.5 |
| 80 | 200 | 310 | 160 | 24 | 18 | 8 × 45° | 81.0 | 185 | 241 | 150 | 18 | 19 | 8 × 45° | 84.3 |
| 100 | 235 | 350 | 190 | 24 | 22 | 8 × 45° | 100.0 | 210 | 292 | 175 | 18 | 19 | 8 × 45° | 109.1 |

| Nominal diameter (port connection) | ANSI B 16.5 Class 150 FTF 37 according to DIN EN 558 - 2 | | | | | | |
|---|---|---|---|---|---|---|---|
| NPS | Ø DF | LF | Ø BF | AF | Ø D | A x α | Ø MF |
| ½ | 89 | 184 | 60.5 | 11.2 | 15.7 | 4 × 90° | 15.7 |
| ¾ | 99 | 184 | 69.9 | 12.7 | 15.7 | 4 × 90° | 20.8 |
| 1 | 108 | 184 | 79.2 | 14.2 | 15.7 | 4 × 90° | 26.7 |
| 1½ | 127 | 222 | 98.6 | 17.5 | 15.7 | 4 × 90° | 40.9 |
| 2 | 152 | 254 | 120.7 | 19.1 | 19.1 | 4 × 90° | 52.6 |
| 2½ | 178 | 276 | 139.7 | 22.3 | 19.1 | 4 × 90° | 62.7 |
| 3 | 190 | 298 | 152.5 | 23.9 | 19.1 | 4 × 90° | 78.0 |
| 4 | 229 | 352 | 190.5 | 23.9 | 19.1 | 8 × 45° | 102.4 |

DTS 1000010970 EN Version: AS Status: RL (released | freigegeben | valide) printed: 28.07.2026


valvesgo.com

## 6.3. Body with threaded connection

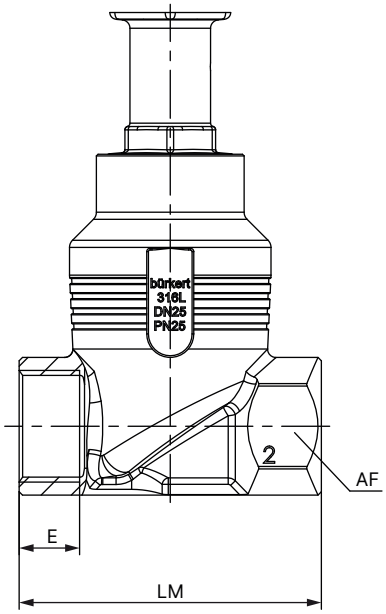


| Nominal diameter (port connection) | | G (DIN ISO 228 - 1)<br>NPT (ASME B1.20.1)<br>RC (ISO 7 - 1) | | | | |
|---|---|---|---|---|---|---|
| | | E | | | LM | AF |
| DN | NPS | G | NPT | RC | | |
| 10 | ⅜ | 12 | 10.3 | 10.1 | 65 | 27 |
| 15 | ½ | 14 | 13.7 | 13.2 | 65 | 27 |
| 20 | ¾ | 16 | 14 | 14.5 | 75 | 34 |
| 25 | 1 | 18 | 16.8 | 16.8 | 90 | 41 |
| 32 | 1¼ | 20 | 17.3 | 19.1 | 110 | 50 |
| 40 | 1½ | 22 | 17.3 | 19.1 | 120 | 55 |
| 50 | 2 | 24 | 17.6 | 23.4 | 150 | 70 |
| 65 | 2½ | 26 | 23.7 | 26.7 | 185 | 85 |
| 80 | 3 | 28 | 30.5 | 29.8 | 205 | 100 |
| 100 | 4 | 32 | 33 | 35.8 | 240 | 125 |

DTS 1000010970 EN Version: AS Status: RL (released | freigegeben | valide) printed: 28.07.2026


valvesgo.com

## 6.4. Body with welded connection

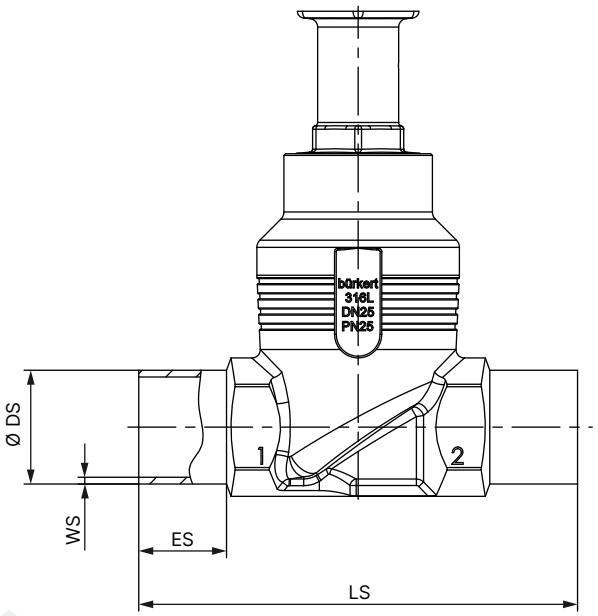


| Nominal diameter (port connection) | ES | LS | DIN EN ISO 1127 / ISO 4200 / DIN 11866 series B | | DIN 11850 - 2 / DIN 11866 series A / DIN EN 10357 series A | |
|---|---|---|---|---|---|---|
| DN | | | Ø DS | WS | Ø DS | WS |
| 10 | 20 | 90 | 17.2 | 1.6 | 13 | 1.5 |
| 15 | 20 | 90 | 21.3 | 1.6 | 19 | 1.5 |
| 20 | 20 | 100 | 26.9 | 1.6 | 23 | 1.5 |
| 25 | 26 | 130 | 33.7 | 2.0 | 29 | 1.5 |
| 32 | 26 | 140 | 42.4 | 2.0 | 35 | 1.5 |
| 40 | 26 | 150 | 48.3 | 2.0 | 41 | 1.5 |
| 50 | 26 | 175 | 60.3 | 2.0 | 53 | 1.5 |
| 65 | 26 | 210 | 76.1 | 2.3 | 70 | 2.0 |
| 80 | 26 | 230 | 88.9 | 2.3 | 85 | 2.0 |
| 100 | 26 | 260 | 114.3 | 2.6 | 104 | 2.0 |

| Nominal diameter (port connection) | ES | LS | ASME BPE/DIN 11866 series C | |
|---|---|---|---|---|
| NPS | | | Ø DS | WS |
| ½ | 20 | 90 | 12.7 | 1.65 |
| ¾ | 20 | 90 | 19.05 | 1.65 |
| 1 | 20 | 100 | 25.4 | 1.65 |
| 1½ | 26 | 140 | 38.1 | 1.65 |
| 2 | 26 | 150 | 50.8 | 1.65 |
| 2½ | 26 | 175 | 63.5 | 1.65 |
| 3 | 26 | 210 | 76.2 | 1.65 |
| 4 | 26 | 260 | 101.6 | 2.11 |

DTS 1000010970 EN Version: AS Status: RL (released | freigegeben | valide) printed: 28.07.2026


valvesgo.com

# 7. Performance specifications

## 7.1. Fluidic data

**Overview of fluidic data for flow below seat (for liquids, steam and gases)**

**Note:**

- $K_V$ value [m³/h]: Measured with water at + 20 °C, 1 bar(g) pressure at valve inlet and free outlet
- Pressure data [bar(g)]: Overpressure to atmospheric pressure

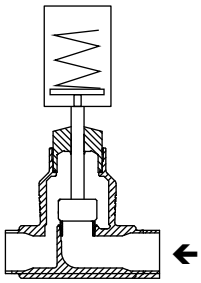

| Nominal diameter (port connection) | | Actuator size Ø | $K_V$ value water | Pilot pressure min. | Operating pressure max. | | |
|---|---|---|---|---|---|---|---|
| | | | | CF A | CF A | | CF B |
| | | | | | PTFE | PEEK | PTFE |
| DN | NPS | [mm] | [m³/h] | [bar(g)] | [bar(g)] | [bar(g)] | [bar(g)] |
| 10 | ⅜ | 40 (C) | 4.7 | 4 | 15 | – | 16 |
| | | 50 (D) | 4.7 | 4.1 | 16 | 16 | 16 |
| | | 63 (E) | 4.7 | 4.5 | 25 | 25 | 25 |
| 15 | ½ | 40 (C) | 4.7 | 4 | 15 | – | 16 |
| | | 50 (D) | 4.7 | 4.1 | 16 | 16 | 16 |
| | | 63 (E) | 4.7 | 4.5 | 25 | 25 | 25 |
| 20 | ¾ | 40 (C) | 8.1 | 4 | 6.5 | – | 16 |
| | | 50 (D) | 8.1 | 4.1 | 11 | 9 | 16 |
| | | 63 (E) | 8.1 | 4.5 | 20 | 17.5 | 25 |
| | | 80 (F) | 8.1 | 5 | 25 | 25 | – |
| 25 | 1 | 63 (E) | 13 | 4.5 | 11 | 10 | 25 |
| | | 80 (F) | 13 | 5 | 25 | 23 | 25 |
| 32 | 1¼ | 63 (E) | 20 | 4.5 | 6 | – | 25 |
| | | 80 (F) | 20 | 5 | 14 | 12.5 | 25 |
| | | 125 (H) | 20 | 4.1 | 25 | 22.5 | – |
| 40 | 1½ | 80 (F) | 31 | 5 | 9 | – | 25 |
| | | 125 (H) | 31 | 4.2 | 25 | – | – |
| 50 | 2 | 100 (G) | 45 | 4.4 | 7.2 | – | 25 (20 [1.)]) |
| | | 125 (H) | 45 | 5.7 | 24 (20 [1.)]) | 20 | – |
| 65 | 2½ | 125 (H) | 73 | 5.7 | 12 | 10 | 23 (15 [1.)]) |
| | | 175 (K) | 73 | 4.5 | 16 (15 [1.)]) | – | 16 (15 [1.)]) |
| | | 225 (L) | 73 | 4.8 | 25 (15 [1.)]) | – | – |
| 80 | 3 | 125 (H) | 110 | 5.7 | 7.5 | 6.5 | 14 (12.5 [1.)]) |
| | | 175 (K) | 110 | 4.5 | 10 | – | 16 (12.5 [1.)]) |
| | | 225 (L) | 110 | 4.8 | 25 (12.5 [1.)]) | – | – |
| 100 | 4 | 125 (H) | 165 | 5.7 | 5 | 4 | 9 |
| | | 175 (K) | 155 | 4.5 | 7 | – | 14 (10 [1.)]) |
| | | 225 (L) | 155 | 4.8 | 16 (10 [1.)]) | – | – |

1.) According to pressure equipment directive 2014/68/EU for compressible fluids of group 1 (dangerous gases and vapours according to article 4, paragraph (1), c), i), first indent)

DTS 1000010970 EN Version: AS Status: RL (released | freigegeben | valide) printed: 28.07.2026



valvesgo.com

DTS 1000010970 EN Version: AS Status: RL (released | freigegeben | valide) printed: 28.07.2026

## Pilot pressure diagrams with flow direction below seat (control function B)

### Actuator size Ø 40 mm (C)

Maximum control pressure 10 bar(g)

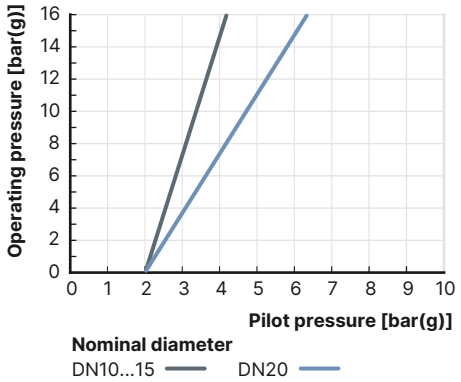


### Actuator size Ø 50 mm (D)

Maximum control pressure 10 bar(g)

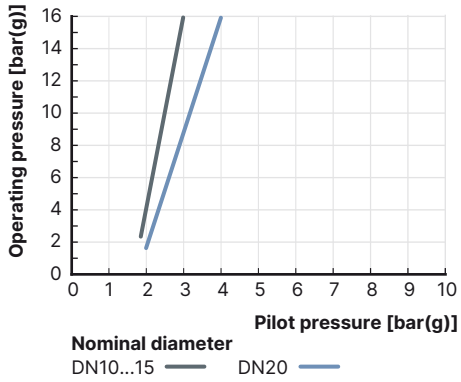


### Actuator size Ø 63 mm (E)

Maximum control pressure 10 bar(g)

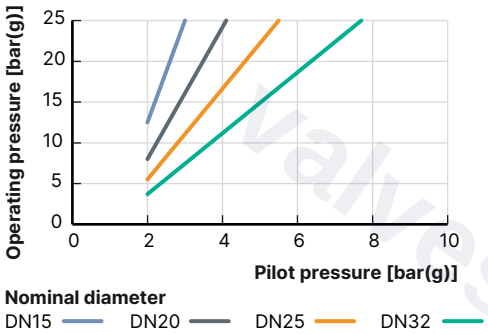


### Actuator size Ø 80 mm (F)

Maximum control pressure 10 bar(g)

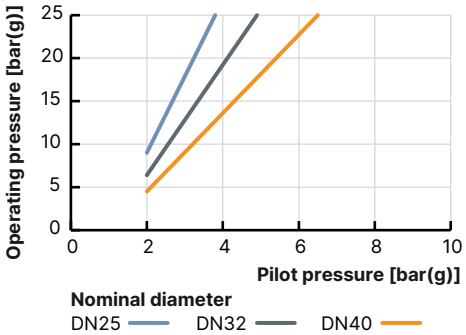


### Actuator size Ø 100 mm (G)

Maximum control pressure 7 bar(g)

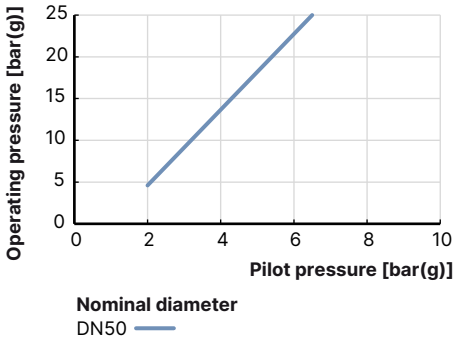


### Actuator size Ø 125 mm (H)

Maximum control pressure 7 bar(g)

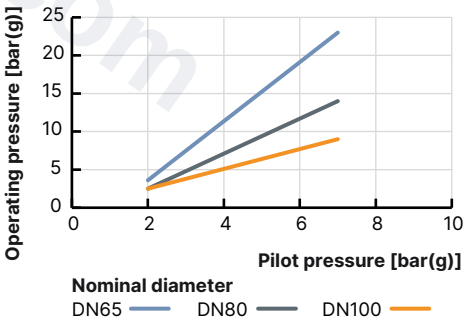


### Actuator size Ø 175 mm (K)

Maximum control pressure 6 bar(g)

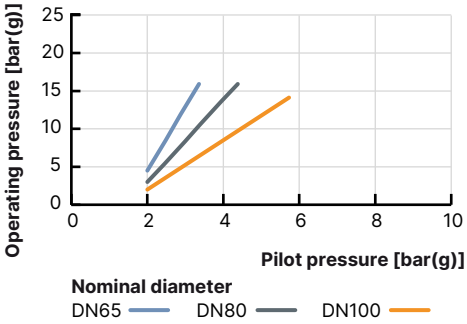




valvesgo.com

### Overview of fluidic data with flow above seat (for gases and steam)

**Note:**

- $K_V$ value [m³/h]: Measured with water at + 20 °C, 1 bar(g) pressure at valve inlet and free outlet
- Pressure data [bar(g)]: Overpressure to atmospheric pressure
- Valves with flow direction above the seat are only partially suitable for liquid mediums. There is a risk of a pressure surge.

**⚠ WARNING**

**Risk of damage due to bursting pipes and bursting equipment when the flow is above the seat.**
**In the case of liquid mediums, water hammer can occur, causing pipes and the device to burst.**

Do not use valves with flow above the seat for liquid mediums.

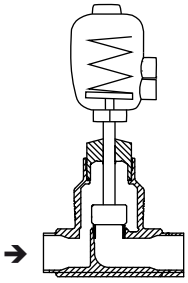

| Nominal diameter (port connection) | | Actuator size Ø | $K_V$ value water | Operating pressure max. |
|---|---|---|---|---|
| | | | | CF A |
| | | | | PTFE |
| DN | NPS | [mm] | [m³/h] | [bar(g)] |
| 10 | ⅜ | 40 (C) | 3 | 16 |
| | | 50 (D) | 3 | 16 |
| 15 | ½ | 40 (C) | 4.7 | 16 |
| | | 50 (D) | 4.7 | 16 |
| 20 | ¾ | 40 (C) | 8.1 | 16 |
| | | 50 (D) | 8.1 | 16 |
| 25 | 1 | 50 (D) | 12 | 16 |
| 32 | 1¼ | 63 (E) | 20 | 16 |
| 40 | 1½ | 80 (F) | 31 | 16 |
| 50 | 2 | 80 (F) | 45 | 16 |
| 65 | 2½ | 125 (H) | 73 | 10 |
| 80 | 3 | 125 (H) | 110 | 10 |
| 100 | 4 | 125 (H) | 165 | 6 |

DTS 1000010970 EN Version: AS Status: RL (released | freigegeben | valide) printed: 28.07.2026

valvesgo.com



valvesgo.com

**Pilot pressure diagram for flow direction above seat (control function A)**

**Actuator size Ø 40 mm (C)**
Maximum control pressure 10 bar(g)

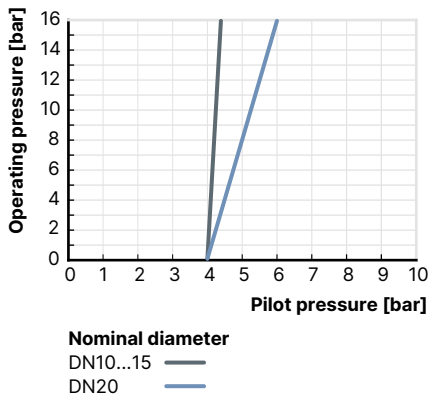


**Actuator size Ø 50 mm (D)**
Maximum control pressure 10 bar(g)

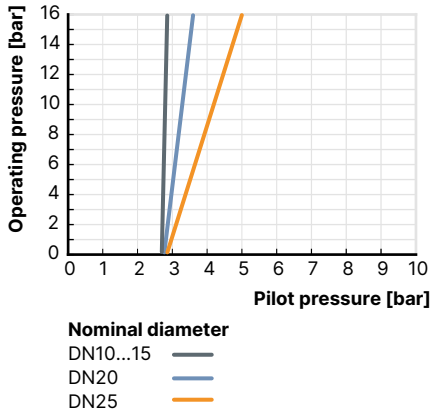


**Actuator size Ø 63 mm (E)**
Maximum control pressure 10 bar(g)

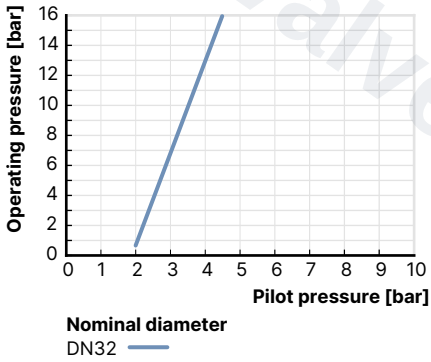


**Actuator size Ø 80 mm (F)**
Maximum control pressure 10 bar(g)

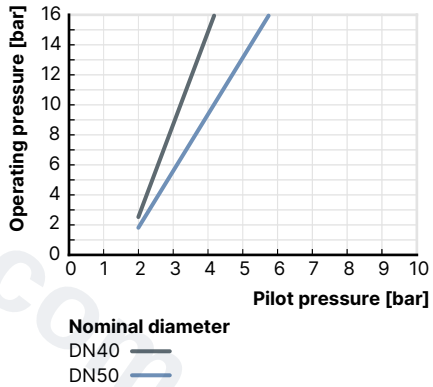


**Actuator size Ø 125 mm (H)**
Maximum control pressure 7 bar(g)

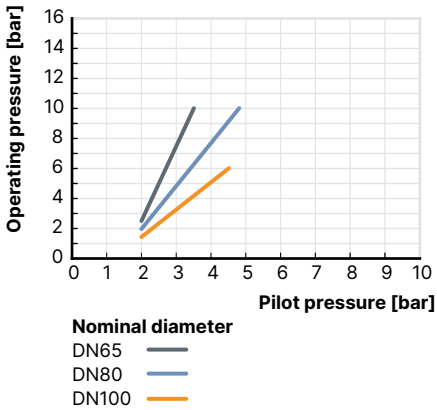


DTS 1000010970 EN Version: AS Status: RL (released | freigegeben | valide) printed: 28.07.2026

valvesgo.com


valvesgo.com

## 7.2. Operating limits

**Operating limits for medium temperature and operating pressure**

In addition to the maximum operating pressures, the operating range of Bürkert process valves is limited by the nominal pressure according to the relevant standard.

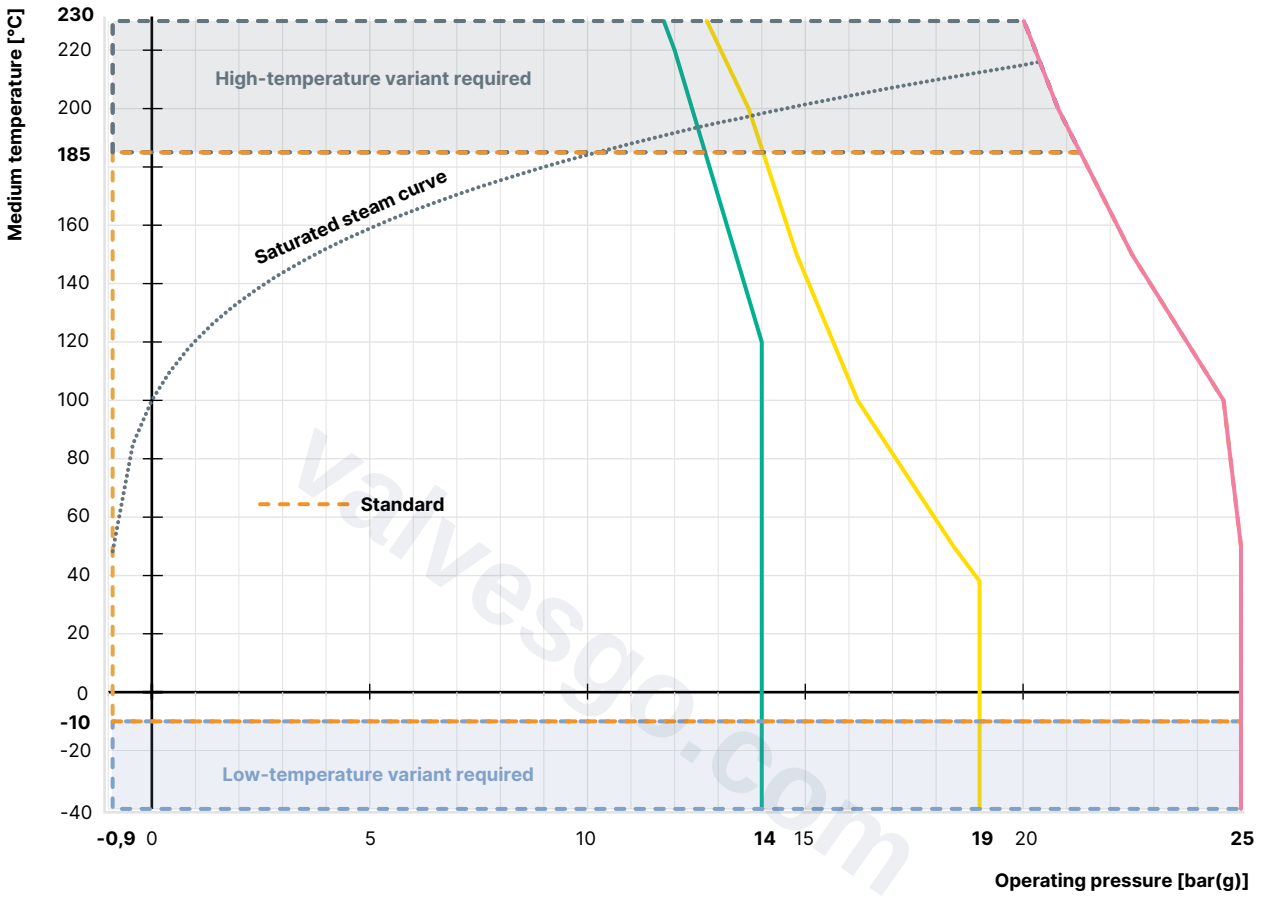


- Operating limits for PN25 according to DIN EN 12516-1
- Operating limits for flange 10K according to JIS B 2220
- Operating limits for Class 150 according to ASME B16.34
- Saturated steam curve for water

DTS 1000010970 EN Version: AS Status: RL (released | freigegeben | valide) printed: 28.07.2026



valvesgo.com

### Operating limits for ambient and medium temperature

**Note:**
For size 40, 50 and 63 PA actuators, the combination of maximum medium temperature and maximum ambient temperature is shown in the following diagram:

**Classic PA actuator**

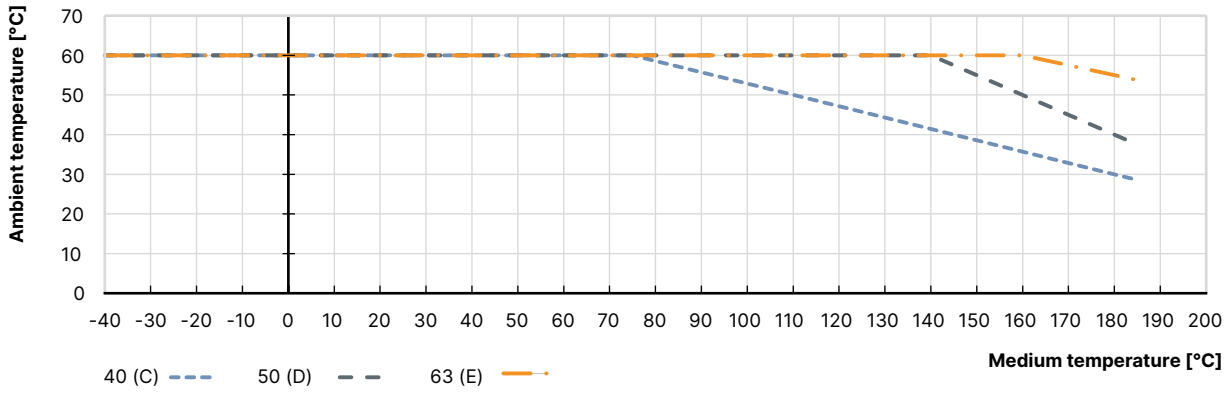


**Classic PPS actuator**

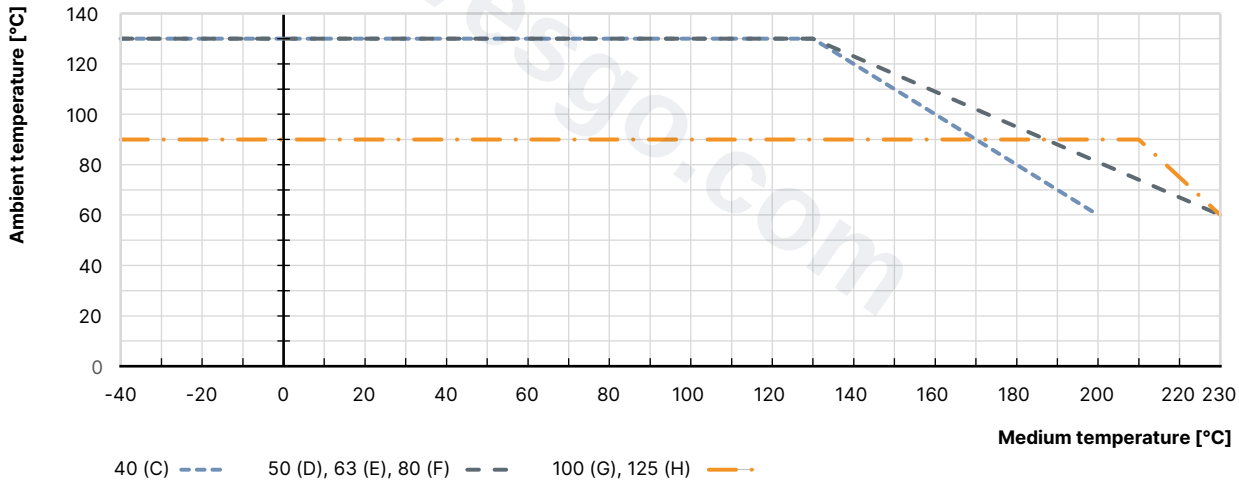


### Operating limits for optional variants

**High-temperature variant**
Thanks to an adaption of the packing gland and seat seal in PEEK, this variant is suitable for applications with steam, neutral gases and other heat transfer mediums up to + 230 °C.

**Water variant**
For applications with water up to + 200 °C, a special configuration of the spindle seal increases service life significantly. It is recommended for water temperatures starting at + 85 °C.

**Vacuum variant**
Without leakage bore, this design is suitable for pressures down to - 0.9 bar(g).

**Low-temperature variant**
Suitable for minimum medium temperatures down to - 40 °C

DTS 1000010970 EN Version: AS Status: RL (released | freigegeben | valide) printed: 28.07.2026


valvesgo.com

## 8. Product accessories

**Electric position feedback indicator**

**Type 8697 ▸ Actuator size Ø 40 (C)...125 (H)**

The position feedback Type 8697 is designed for integrated mounting on CLASSIC series 20XX process valves, suiting the requirements of hygienic process environments. Mechanical or inductive limit switches register the position of the valve.

**Features**
- Compact design
- LED position indicator
- Mechanical or inductive limit switches for end position registering
- Easy-to-clean clean chemically resistant housing featuring IP65/IP67, 4X Rating
- Optionally intrinsically safe variant according to IECEx

**Customer benefits**
- Easy and quick installation
- High level of signal reliability thanks to self-adjusting limit switches
- Minimised space requirement in the plant piping for more flexibility in plant design

**Adaptation for proximity switch**

**Type 2XXX ▸**

Various options for the use of inductive proximity switches are available for the CLASSIC series actuators:
- Nipple
- Support bracket, 1-fold
- Support bracket, 2-fold

**Plunger valve 3/2-way direct acting**

**Type 7012 ▸ for Actuator size Ø 40 (C)...63 (E), Type 6014 ▸ for Actuator size Ø 50 (D)...125 (H)**

For easy direct mounting to a pneumatic actuator, a banjo connection with banjo bolt is the ideal solution. An optional manual override allows fast commissioning and optimum maintenance.

In conjunction with a cable plug according to DIN EN 175301-803 Form A or B, the valves meet protection class IP65.

**Features**
- High reliability
- Resistant according to IP65

**Customer benefits**
Easy and quick installation

**Stroke limiter**

**Type 2XXX ▸**

Stroke limitations can be used to limit the minimum and maximum flow rate of the valves.

Different variants are available:
- Maximum stroke limitation
- Maximum and minimum stroke limitation with optical position indicator

DTS 1000010970 EN Version: AS Status: RL (released | freigegeben | valide) printed: 28.07.2026



valvesgo.com

## 9. Networking and combination with other Bürkert products

The **globe valve Type 2012** can be combined with the **feedback positioner Type 8697** to form the **valve system on/off CLASSIC Type 8801-GA**.

**Note:**

- For the configuration of further valve systems use the **Product Enquiry Form** (see **"10.3. Bürkert Product Enquiry Form" on page 23**).
- You order two components and receive a completely assembled and tested valve.

**Globe valve**

**Type 2012 threaded connection**

**Type 2012 welded connection**

**Type 2012 flange connection**

**Position feedback**

**Type 8697** ▸
Pneumatic control for decentralised automation of CLASSIC process valves

**Valve system on/off CLASSIC**

**Type 8801-GA-U** ▸
on/off CLASSIC valve valve system with decentralised automation

DTS 1000010970 EN Version: AS Status: RL (released | freigegeben | valide) printed: 28.07.2026



valvesgo.com

# 10. Ordering information

## 10.1. Bürkert eShop

**Bürkert eShop – Easy ordering and quick delivery**

You want to find your desired Bürkert product or spare part quickly and order directly? Our online shop is available for you 24/7. Sign up and enjoy all the benefits.

Order online now

## 10.2. Bürkert product filter

**Bürkert product filter – Get quickly to the right product**

You want to select products comfortably based on your technical requirements?
Use the Bürkert product filter and find suitable articles for your application quickly and easily.

Try out our product filter

## 10.3. Bürkert Product Enquiry Form

**Note:**
Please see our Product Enquiry Form for a full explanation of our specification key.

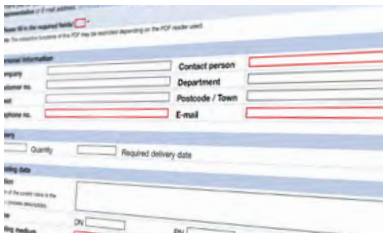


**Bürkert Product Enquiry Form – Your enquiry quickly and compactly**

Would you like to make a specific product enquiry based on your technical requirements? Use our Product Enquiry Form for this purpose. There you will find all the relevant information for your Bürkert contact. This will enable us to provide you with the best possible advice.

Fill out the form now

DTS 1000010970 EN Version: AS Status: RL (released | freigegeben | valide) printed: 28.07.2026



valvesgo.com

## 10.4. Ordering chart flange connection

**Valves with flow direction below seat**

| Control function | Nominal diameter (port connection) | Actuator size Ø | $K_V$ value water | Pilot pressure min. | Operating pressure max. | Article no. | |
|---|---|---|---|---|---|---|---|
| | DN | [mm] | [m³/h] | [bar(g)] | [bar(g)] | PA actuator | PPS actuator |
| **DIN EN 1092 - 1** | | | | | | **Stainless steel body** | |
| **A (CF A)** see control functions [1.)] | 10 | 40 (C) | 4.7 | 4.0 | 15 | 343814 | 344096 |
| | | 50 (D) | 4.7 | 4.1 | 16 | 343818 | 344095 |
| | 15 | 40 (C) | 4.7 | 4.0 | 15 | 343823 | o. r. |
| | | 50 (D) | 4.7 | 4.1 | 16 | 343829 | 343912 |
| | 20 | 40 (C) | 8.1 | 4.0 | 6.5 | 344116 | o. r. |
| | | 50 (D) | 8.1 | 4.1 | 11 | 343835 | o. r. |
| | | 63 (E) | 8.1 | 4.5 | 20 | 344117 | 344119 |
| | 25 | 63 (E) | 13.0 | 4.5 | 11 | 342307 | 343965 |
| | | 80 (F) | 13.0 | 5.0 | 25 | 343851 | 344132 |
| | 32 | 63 (E) | 20.0 | 4.5 | 6 | 343855 | o. r. |
| | | 80 (F) | 20.0 | 5.0 | 14 | 343859 | 344137 |
| | 40 | 80 (F) | 31.0 | 5.0 | 9 | 343864 | o. r. |
| | | 125 (H) | 31.0 | 3.2 | 25 | 343869 | 344163 |
| | 50 | 100 (G) | 45.0 | 4.4 | 7.2 | 346199 | 359741 |
| | | 125 (H) | 45.0 | 3.2 | 10 | 344071 | 344178 |
| | 65 | 125 (H) | 73.0 | 5.7 | 12 | 344183 | 344185 |
| | | 175 (K) | 73.0 | 4.5 | 16 (15 [3.)]) | 344184 | o. r. |
| | 80 | 125 (H) | 110.0 | 5.7 | 7.5 | 343951 | 344190 |
| | | 175 (K) | 110.0 | 4.5 | 10 | 344188 | o. r. |
| | | 225 (L) | 110.0 | 3.3 | 16 (12.5 [3.)]) | 344189 | o. r. |
| | 100 | 125 (H) | 165.0 | 5.7 | 5 | 344195 | 344197 |
| | | 175 (K) | 155.0 | 4.5 | 7.0 | 344193 | o. r. |
| | | 225 (L) | 155.0 | 4.8 | 16 (10 [3.)]) | 344194 | o. r. |

o. r. = on request

1.) Further information can be found in chapter "3. Control functions" on page 6.

2.) Further information can be found in chapter "Pilot pressure diagrams with flow direction below seat (control function B)" on page 16.

3.) According to pressure equipment directive 2014/68/EU for compressible fluids of group 1 (dangerous gases and vapours according to article 4, paragraph (1), c), i), first indent)

### Further variants on request

**Approval**
Food processing, drinking water, oxygen, fuel gases, explosion protection

**Pressure**
Other variants for operating pressures up to 25 bar(g)
Vacuum variant down to - 0.9 bar(g)

**Material**
Seal: NBR, FKM, EPDM

**Temperature**
High temperature variant up to + 230 °C
Hot water variant up to + 200 °C
Low temperature variant down to - 40 °C

**Process connection**
Clamp connection, threaded connection, welded connection

DTS 1000010970 EN Version: AS Status: RL (released | freigegeben | valide) printed: 28.07.2026



valvesgo.com

### Valves with flow direction above seat

**Note:**
There is a risk of water hammer!

| Control function | Nominal diameter (port connection) | Actuator size Ø | $K_V$ value water | Pilot pressure min. | Operating pressure max. | Article no. | |
|---|---|---|---|---|---|---|---|
| | DN | [mm] | [m³/h] | [bar(g)] | [bar(g)] | PA actuator | PPS actuator |
| **DIN EN 1092 - 1** | | | | | | **Stainless steel body** | |
| **A (CF A)** see control functions [1.)] | 10 | 40 (C) | 4.7 | See footnote [2.)] | 16 | 344092 | o. r. |
| | | 50 (D) | 4.7 | | 16 | 343899 | 343911 |
| | 15 | 40 (C) | 4.7 | | 16 | 344112 | o. r. |
| | | 50 (D) | 4.7 | | 16 | 343900 | 342699 |
| | 20 | 40 (C) | 8.1 | | 16 | 343902 | o. r. |
| | | 50 (D) | 8.1 | | 16 | 343903 | 343913 |
| | 25 | 50 (D) | 12.0 | | 16 | 343905 | 343914 |
| | 32 | 63 (E) | 20.0, | | 16 | 344138 | 343916 |
| | 40 | 80 (F) | 31.0 | | 16 | 342648 | 344165 |
| | 50 | 80 (F) | 45.0 | | 16 | 341405 | 343917 |
| | 65 | 125 (H) | 73.0 | | 10 | 343941 | o. r. |
| | 80 | 125 (H) | 110.0 | | 10 | 343943 | o. r. |
| | 100 | 125 (H) | 165.0 | | 6 | 342703 | o. r. |

o. r. = on request
1.) Further information can be found in chapter "3. Control functions" on page 6.
2.) Further information can be found in chapter "Pilot pressure diagram for flow direction above seat (control function A)" on page 18.

## Further variants on request

**Approval**
Food processing, drinking water, oxygen, fuel gases, explosion protection

**Pressure**
Other variants for operating pressures up to 25 bar(g)
Vacuum variant down to - 0.9 bar(g)

**Material**
Seal: NBR, FKM, EPDM

**Temperature**
High temperature variant up to + 230 °C
Hot water variant up to + 200 °C
Low temperature variant down to - 40 °C

**Process connection**
Clamp connection, threaded connection, welded connection

DTS 1000010970 EN Version: AS Status: RL (released | freigegeben | valide) printed: 28.07.2026


valvesgo.com

## 10.5. Ordering chart thread connection

**Valves with flow direction below seat**

**Note:**
Other variants are available on request.

| Control function | Nominal diameter (port connection) | Threaded connection | Actuator size Ø | $K_V$ value water | Pilot pressure min. | Operating pressure max. | Article no. | |
|---|---|---|---|---|---|---|---|---|
| | DN | | [mm] | [m³/h] | [bar(g)] | [bar(g)] | PA actuator | PPS actuator |
| **DIN ISO 228 - 1** | | | | | | | **Stainless steel body** | |
| **A (CF A)** see control functions 1.) | 10 | G ⅜ | 40 (C) | 4.7 | 4.0 | 15 | 343815 | 343883 |
| | | | 50 (D) | 4.7 | 4.1 | 16 | 343819 | 344098 |
| | 15 | G ½ | 40 (C) | 4.7 | 4.0 | 15 | 344100 | o. r. |
| | | | 50 (D) | 4.7 | 4.1 | 16 | 343901 | 344102 |
| | 20 | G ¾ | 40 (C) | 8.1 | 4.0 | 6.5 | 343833 | o. r. |
| | | | 50 (D) | 8.1 | 4.1 | 11 | 343836 | o. r. |
| | | | 63 (E) | 8.1 | 4.5 | 20 | 344121 | 344122 |
| | 25 | G 1 | 63 (E) | 13.0 | 4.5 | 11 | 343846 | o. r. |
| | | | 80 (F) | 13.0 | 5.0 | 25 | 343852 | 344133 |
| | 32 | G 1¼ | 63 (E) | 20.0 | 4.5 | 6 | 343856 | o. r. |
| | | | 80 (F) | 20.0 | 5.0 | 14 | 343860 | o. r. |
| | 40 | G 1½ | 80 (F) | 31.0 | 5.0 | 9 | 344172 | o. r. |
| | | | 125 (H) | 31.0 | 3.2 | 16 | 343870 | 343894 |
| | 50 | G 2 | 100 (G) | 45.0 | 4.4 | 7.2 | 342873 | o. r. |
| | | | 125 (H) | 45.0 | 3.2 | 10 | 343880 | 343896 |
| | 65 | G 2½ | 125 (H) | 65.0 | 5.7 | 12 | 343921 | 344187 |
| | | | 175 (K) | 65.0 | 4.5 | 16 (15 2.)) | 344186 | o. r. |

o. r. = on request
1.) Further information can be found in chapter "3. Control functions" on page 6.
2.) According to pressure equipment directive 2014/68/EU for compressible fluids of group 1 (dangerous gases and vapours according to article 4, paragraph (1), c), i), first indent)

### Further variants on request

| | |
|---|---|
| **Approval**<br>Food processing, drinking water, oxygen, fuel gases, explosion protection | **Pressure**<br>Other variants for operating pressures up to 25 bar(g)<br>Vacuum variant down to - 0.9 bar(g) |
| **Material**<br>Seal: NBR, FKM, EPDM | **Temperature**<br>High temperature variant up to + 230 °C<br>Hot water variant up to + 200 °C<br>Low temperature variant down to - 40 °C |
| **Process connection**<br>Clamp connection, threaded connection, flange connection | |

DTS 1000010970 EN Version: AS Status: RL (released | freigegeben | valide) printed: 28.07.2026


valvesgo.com

### Valves with flow direction above seat

**Note:**
There is a risk of a pressure surge.

| Control function | Nominal diameter (port connection) | Threaded connec-tion | Actuator size Ø | $K_v$ value water | Pilot pressure min. | Operating pressure max. | Article no. | |
|---|---|---|---|---|---|---|---|---|
| | DN | | [mm] | [m³/h] | [bar(g)] | [bar(g)] | PA actuator | PPS actuator |
| **DIN ISO 228 - 1** | | | | | | | **Stainless steel body** | |
| **A (CF A)** see control functions 1.) | 10 | G ⅜ | 40 (C) | 4.7 | See footnote 2.) | 16 | 20020021 | o. r. |
| | | | 50 (D) | 4.7 | | 16 | 20020075 | o. r. |
| | 15 | G ½ | 40 (C) | 4.7 | | 16 | 20020080 | o. r. |
| | | | 50 (D) | 4.7 | | 16 | 341406 | o. r. |
| | 20 | G ¾ | 40 (C) | 8.1 | | 16 | 20020091 | o. r. |
| | | | 50 (D) | 8.1 | | 16 | 374604 | o. r. |
| | 25 | G 1 | 50 (D) | 12.0 | | 16 | 343906 | 343915 |
| | 32 | G ¼ | 63 (E) | 20.0 | | 16 | 346131 | o. r. |
| | 40 | G 1½ | 80 (F) | 31.0 | | 16 | 20020097 | o. r. |
| | 50 | G 2 | 80 (F) | 45.0 | | 16 | 343910 | o. r. |
| | 65 | G 2½ | 125 (H) | 65.0 | | 10 | 20020103 | o. r. |

o. r. = on request
1.) Further information can be found in chapter "3. Control functions" on page 6.
2.) Further information can be found in chapter "Pilot pressure diagram for flow direction above seat (control function A)" on page 18.

valvesgo.com

## Further variants on request

| | |
|---|---|
| **Approval**<br>Food processing, drinking water, oxygen, fuel gases, explosion protection | **Pressure**<br>Other variants for operating pressures up to 25 bar(g)<br>Vacuum variant down to - 0.9 bar(g) |
| **Material**<br>Seal: NBR, FKM, EPDM | **Temperature**<br>High temperature variant up to + 230 °C<br>Hot water variant up to + 200 °C<br>Low temperature variant down to - 40 °C |
| **Process connection**<br>Clamp connection, threaded connection, flange connection | |

DTS 1000010970 EN Version: AS Status: RL (released | freigegeben | valide) printed: 28.07.2026


valvesgo.com

## 10.6. Ordering chart welded connection

**Valves with flow direction below seat**

| Control function | Nominal diameter (port connection) | Welded connection external Ø x WS | Actuator size Ø | $K_V$ value water | Pilot pressure min. | Operating pressure max. | Article no. | |
|---|---|---|---|---|---|---|---|---|
| | DN | [mm] | [mm] | [m³/h] | [bar(g)] | [bar(g)] | PA actuator | PPS actuator |
| **DIN EN ISO 1127 / ISO 4200** | | | | | | | **Stainless steel body** | |
| **A (CF A)** see control functions [1.)] | 10 | 17.2 × 1.6 | 40 (C) | 4.7 | 4.0 | 15 | 343816 | o. r. |
| | | | 50 (D) | 4.7 | 4.1 | 16 | 343820 | 343884 |
| | 15 | 21.3 × 1.6 | 40 (C) | 4.7 | 4.0 | 15 | 343824 | o. r. |
| | | | 50 (D) | 4.7 | 4.1 | 16 | 343830 | 343886 |
| | 20 | 26.9 × 1.6 | 40 (C) | 8.1 | 4.0 | 6.5 | 343834 | o. r. |
| | | | 50 (D) | 8.1 | 4.1 | 11 | 343837 | o. r. |
| | | | 63 (E) | 8.1 | 4.5 | 20 | 343843 | 343888 |
| | 25 | 33.7 × 2.0 | 63 (E) | 13.0 | 4.5 | 11 | 343847 | o. r. |
| | | | 80 (F) | 13.0 | 5.0 | 25 | 343853 | 343890 |
| | 32 | 42.4 × 2.0 | 63 (E) | 20.0 | 4.5 | 6 | 343857 | o. r. |
| | | | 80 (F) | 20.0 | 5.0 | 14 | 343861 | 343893 |
| | 40 | 48.3 × 2.0 | 80 (F) | 31.0 | 5.0 | 9 | 343865 | o. r. |
| | | | 125 (H) | 31.0 | 3.2 | 16 | 343871 | 343895 |
| | 50 | 60.3 × 2.0 | 100 (G) | 45.0 | 4.4 | 7.2 | 343875 | o. r. |
| | | | 125 (H) | 45.0 | 3.2 | 10 | 343881 | 343897 |
| | 65 | 76.1 × 2.3 | 125 (H) | 73.0 | 5.7 | 12 | 343922 | 343956 |
| | | | 175 (K) | 73.0 | 4.5 | 16 (15 [2.)]) | 343827 | o. r. |
| | 80 | 88.9 × 2.3 | 125 (H) | 110.0 | 5.7 | 7.5 | 343952 | 343959 |
| | | | 175 (K) | 110.0 | 4.5 | 10 | 343932 | o. r. |
| | | | 225 (L) | 110.0 | 4.8 | 25 (12.5 [2.)]) | 343934 | o. r. |
| | 100 | 114.3 × 2.6 | 125 (H) | 165.0 | 5.7 | 5 | 343954 | 343961 |
| | | | 175 (K) | 155.0 | 4.5 | 7.0 | 343937 | o. r. |
| | | | 225 (L) | 155.0 | 4.8 | 16 (10 [2.)]) | 343939 | o. r. |

DTS 1000010970 EN Version: AS Status: RL (released | freigegeben | valide) printed: 28.07.2026



valvesgo.com

| Control function | Nominal diameter (port connection) | Welded connection external Ø x WS | Actuator size Ø | $K_V$ value water | Pilot pressure min. | Operating pressure max. | Article no. | |
|---|---|---|---|---|---|---|---|---|
| | DN | [mm] | [mm] | [m³/h] | [bar(g)] | [bar(g)] | PA actuator | PPS actuator |
| **DIN 11850 - 2** | | | | | | | **Stainless steel body** | |
| **A (CF A)** see control functions [1.)] | 10 | 13 × 1.5 | 40 (C) | 4.7 | 4.0 | 15 | 343817 | o. r. |
| | | | 50 (D) | 4.7 | 4.1 | 16 | 343821 | 343885 |
| | 15 | 19 × 1.5 | 40 (C) | 4.7 | 4.0 | 15 | 343825 | o. r. |
| | | | 50 (D) | 4.7 | 4.1 | 16 | 343831 | 343887 |
| | 20 | 23 × 1.5 | 40 (C) | 8.1 | 4.0 | 6.5 | o. r. | o. r. |
| | | | 50 (D) | 8.1 | 4.1 | 11 | 343838 | o. r. |
| | | | 63 (E) | 8.1 | 4.5 | 20 | 343844 | 343889 |
| | 25 | 29 × 1.5 | 63 (E) | 13.0 | 4.5 | 11 | o. r. | o. r. |
| | | | 80 (F) | 13.0 | 5.0 | 25 | 343854 | 343891 |
| | 32 | 35 × 1.5 | 63 (E) | 20.0 | 4.5 | 6 | 343858 | o. r. |
| | | | 80 (F) | 20.0 | 5.0 | 14 | 343862 | o. r. |
| | 40 | 41 × 1.5 | 80 (F) | 31.0 | 5.0 | 9 | 343866 | o. r. |
| | | | 125 (H) | 31.0 | 3.2 | 16 | 343872 | 344087 |
| | 50 | 53 × 1.5 | 100 (G) | 45.0 | 4.4 | 7.2 | 343876 | o. r. |
| | | | 125 (H) | 45.0 | 3.2 | 10 | 343882 | 343898 |
| | 65 | 70.0 × 2.0 | 125 (H) | 73.0 | 5.7 | 12 | 343923 | 343958 |
| | | | 175 (K) | 73.0 | 4.5 | 16 (15 [2.)]) | 343928 | o. r. |
| | 80 | 85.0 × 2.0 | 125 (H) | 110.0 | 5.7 | 7.5 | 343953 | 343960 |
| | | | 175 (K) | 110.0 | 4.5 | 10 | 343933 | o. r. |
| | | | 225 (L) | 110.0 | 4.8 | 25 (12.5 [2.)]) | 343936 | o. r. |
| | 100 | 104.0 × 2.0 | 125 (H) | 165.0 | 5.7 | 5 | 343955 | 343962 |
| | | | 175 (K) | 155.0 | 4.5 | 7.0 | 343938 | o. r. |
| | | | 225 (L) | 155.0 | 4.8 | 16 (10 [2.)]) | 343940 | o. r. |

o. r. = on request

1.) Further information can be found in chapter "3. Control functions" on page 6.

2.) According to pressure equipment directive 2014/68/EU for compressible fluids of group 1 (dangerous gases and vapours according to article 4, paragraph (1), c), i), first indent)

## Further variants on request

**Approval**
Food processing, drinking water, oxygen, fuel gases, explosion protection

**Pressure**
Other variants for operating pressures up to 25 bar(g)
Vacuum variant down to - 0.9 bar(g)

**Material**
Seal: NBR, FKM, EPDM

**Temperature**
High temperature variant up to + 230 °C
Hot water variant up to + 200 °C
Low temperature variant down to - 40 °C

**Process connection**
Clamp connection, threaded connection, flange connection

DTS 1000010970 EN Version: AS Status: RL (released | freigegeben | valide) printed: 28.07.2026



valvesgo.com

### Valves with flow direction above seat

**Note:**
Valves with flow direction above the seat are only conditionally suitable for liquid mediums. There is a risk of a pressure surge.

| Control function | Nominal diameter (port connection) | Welded connection external Ø x WS | Actuator size Ø | $K_V$ value water | Pilot pressure min. | Operating pressure max. | Article no. | |
|---|---|---|---|---|---|---|---|---|
| | DN | [mm] | [mm] | [m³/h] | [bar(g)] | [bar(g)] | PA actuator | PPS actuator |
| **DIN EN ISO 1127 / ISO 4200** | | | | | | | **Stainless steel body** | |
| **A (CF A)** see control functions [1.)] | 10 | 17.2 × 1.6 | 40 (C) | 4.7 | See footnote [2.)] | 16 | 342653 | o. r. |
| | | | 50 (D) | 4.7 | | 16 | 20020146 | o. r. |
| | 15 | 21.3 × 1.6 | 40 (C) | 4.7 | | 16 | 20020156 | o. r. |
| | | | 50 (D) | 4.7 | | 16 | 20020161 | o. r. |
| | 20 | 26.9 × 1.6 | 40 (C) | 8.1 | | 16 | 20020168 | o. r. |
| | | | 50 (D) | 8.1 | | 16 | 343904 | o. r. |
| | 25 | 33.7 × 2.0 | 50 (D) | 12.0 | | 16 | 343907 | o. r. |
| | 32 | 42.4 × 2.0 | 63 (E) | 20.0 | | 16 | 20020175 | o. r. |
| | 40 | 48.3 × 2.0 | 80 (F) | 31.0 | | 16 | 346297 | o. r. |
| | 50 | 60.3 × 2.0 | 80 (F) | 45.0 | | 16 | 20020179 | o. r. |
| | 65 | 76.1 × 2.3 | 125 (H) | 73.0 | | 10 | 20020186 | o. r. |
| | 80 | 88.9 × 2.3 | 125 (H) | 110.0 | | 10 | 343945 | o. r. |
| | 100 | 114.3 × 2.6 | 125 (H) | 165.0 | | 6 | 343948 | o. r. |
| **DIN 11850 - 2** | | | | | | | | |
| **A (CF A)** see control functions [1.)] | 10 | 13 × 1.5 | 40 (C) | 4.7 | See footnote [2.)] | 16 | 20020191 | o. r. |
| | | | 50 (D) | 4.7 | | 16 | 20020198 | o. r. |
| | 15 | 19 × 1.5 | 40 (C) | 4.7 | | 16 | 20020202 | o. r. |
| | | | 50 (D) | 4.7 | | 16 | 346118 | o. r. |
| | 20 | 23 × 1.5 | 40 (C) | 8.1 | | 16 | 20020211 | o. r. |
| | | | 50 (D) | 8.1 | | 16 | 20020216 | o. r. |
| | 25 | 29 × 1.5 | 50 (D) | 12.0 | | 16 | 20011741 | o. r. |
| | 32 | 35 × 1.5 | 63 (E) | 20.0 | | 16 | 20020217 | o. r. |
| | 40 | 41 × 1.5 | 80 (F) | 31.0 | | 16 | 20020218 | o. r. |
| | 50 | 53 × 1.5 | 80 (F) | 45.0 | | 16 | 379466 | o. r. |
| | 65 | 70.0 × 2.0 | 125 (H) | 73.0 | | 10 | 343942 | o. r. |
| | 80 | 85.0 × 2.0 | 125 (H) | 110.0 | | 10 | 343946 | o. r. |
| | 100 | 104.0 × 2.0 | 125 (H) | 165.0 | | 6 | 343949 | o. r. |

o. r. = on request
1.) Further information can be found in chapter "3. Control functions" on page 6.
2.) Further information can be found in chapter "Pilot pressure diagram for flow direction above seat (control function A)" on page 18.

## Further variants on request

| | |
|---|---|
| **Approval**<br>Food processing, drinking water, oxygen, fuel gases, explosion protection | **Pressure**<br>Other variants for operating pressures up to 25 bar(g)<br>Vacuum variant down to - 0.9 bar(g) |
| **Material**<br>Seal: NBR, FKM, EPDM | **Temperature**<br>High temperature variant up to + 230 °C<br>Hot water variant up to + 200 °C<br>Low temperature variant down to - 40 °C |
| **Process connection**<br>Clamp connection, threaded connection, flange connection | |

DTS 1000010970 EN Version: AS Status: RL (released | freigegeben | valide) printed: 28.07.2026


valvesgo.com

## 10.7. Ordering chart accessories

**Accessories for 3/2-way pilot valve with banjo bolts**

**Note:**

- Seal material FKM / NBR
- For complete program see **data sheet Type 7012 ▸, Type 6014 ▸, Type 2507 ▸, Type 2518 ▸**

| Valves for actuator size Ø | Type | Pilot air port | Working port (banjo bolt) | $Q_{Nn}$ value air | Pressure range | Electrical coil connection Industry standard | Power consumption | Article no. | | | |
|---|---|---|---|---|---|---|---|---|---|---|---|
| | | | | | | | | Voltage/Frequency | | Cable plug | |
| | | | | | | | | 024 V/DC | 230 V/50 | 12...24 AC/DC with LED | 0...250 AC/DC |
| [mm] | | | | [l/min] | [bar(g)] | | [W] | [V] | [V] | [V] | [V] |
| 40 (C) | 7012 | Thread G ¼ | Thread G ⅛ | 35 | 0...10 | Type 2507 Form B | 5.5 | 20077598 | 20077609 | 423849 | 423845 |
| | | Push-in connector Ø 6 mm | | | | | | 20087641 | 20096098 | | |
| 50 (D)... 63 (E) | | Thread G ¼ | Thread G ¼ | | | | | 20077514 | 20077519 | | |
| | | Push-in connector Ø 6 mm | | | | | | 20087628 | 20092512 | | |
| 50 (D)... 125 (H) | 6014 | Thread G ¼ | Thread G ¼ | 120 | 0...7 | Type 2518 Form A | 8 | 334870 | 389550 | 314812 | 314802 |

valvesgo.com

DTS 1000010970 EN Version: AS Status: RL (released | freigegeben | valide) printed: 28.07.2026



valvesgo.com