bürkert
FLUID CONTROL SYSTEMS

Tank bottom diaphragm valve with manually operated actuator (basic)

- Valve body and diaphragm are available in different materials and variants
- Product wetted surfaces in Ra ≤ 0.38 µm...1.6 µm (optionally electropolished)
- Available in all common connection sizes and variants

Product variants described in the data sheet may differ from the product presentation and description.

Can be combined with

Type SV02
Diaphragms

Type 2975
Tank bottom diaphragm valve with manually operated actuator (FullFunction)

Type 2933
2/2-way diaphragm valve with manually operated actuator (basic)

Type 2934
T-diaphragm valve with manually operated actuator (basic)

Type 2103
2/2-way diaphragm valve with pneumatic stainless steel actuator (Type ELEMENT) for decentralised automation

Type 8098
FLOWave SAW flowmeter

Type description

The Type 2935 manually operated diaphragm valve consists of a manually operated actuator, a diaphragm and a tank bottom valve body. The manual actuator with plastic or stainless steel handwheel is available with a diaphragm bonnet made of stainless steel or plastic and ensures use in hygienic or aggressive ambient conditions. The flow-optimised valve body with minimum dead space enables high flow values and a wide range of possible applications. The valve body and the diaphragms are available in all common materials and variants. The actuator has a compact, autoclavable design and is compatible with all other Bürkert diaphragm valves. An explosion-proof ATEX/IECEx device variant is available. The manual actuator is equipped with an integrated visual position indicator, a reproducible stroke scale and an adjustable closing limiter. The manual actuator can optionally be equipped with sensors for position feedback.

DTS 1000584287 EN Version: K Status: RL (released | freigegeben | valide) printed: 01.06.2026

© Christian Bürkert GmbH & Co. KG, Subject to alteration

Visit product website

valvesgo.com

Table of contents

1. General technical data 3

2. Approvals and conformities 4

2.1. General notes 4
2.2. Conformity 4
2.3. Standards 4
2.4. Explosion protection 4
2.5. Foods and beverages/Hygiene 5
2.6. Others 5

3. Materials 6

3.1. Bürkert resistApp 6
3.2. Material specifications 6
3.3. Example of available diaphragm materials 7

4. Dimensions 8

4.1. Manual actuator 8
Diaphragm size 8...25 8
Diaphragm size 40...50 9
Diaphragm size 65...100 10
4.2. Manual actuator with tank bottom body 11
4.3. Tank bottom body with welded connection 12
4.4. Tank bottom body with clamp connection 13

5. Performance specifications 14

5.1. Medium pressure 14

6. Ordering information 15

6.1. Bürkert eShop 15
6.2. Bürkert product filter 15
6.3. Bürkert Product Enquiry Form 15
6.4. Ordering chart accessories 15

DTS 1000584287 EN Version: K Status: RL (released | freigegeben | valide) printed: 01.06.2026

valvesgo.com

valvesgo.com

1. General technical data

Product properties	
Dimensions	Further information can be found in chapter "4. Dimensions" on page 8.
Material [1.)]	
Block body (VH) [1.)]	Stainless steel block material 1.4435 according to DIN EN 10088 and 316L according to ASTM A479 / A479M
Block body (VI) [1.)]	Stainless steel block material 1.4435 according to DIN EN 10088 and 316L according to ASME BPE (Table MM- 2.1.1, Ed. 2024) BN2 available on request
Diaphragm	EPDM (AD) [1.)], PTFE/EPDM (EA) [1.)], advanced PTFE/EPDM (EU) [1.)], laminate of GYLON® and EPDM (ER) [1.)]
Actuator (diaphragm bonnet/handwheel)	Stainless steel/PPS, PPS/PPS, stainless steel/stainless steel
Diaphragm size	8...100
Standard surface quality [2.)]	
Block body (VH/VI) [1.)]	Internally electrically polished: Ra ≤ 0.38 µm (NO17) [1.)] (ASME BPE SF4/DIN HE4) (externally: Ra ≤ 1.6 µm) Internally mechanically polished: Ra ≤ 0.5 µm (NO14) [1.)] (ASME BPE SF1) (externally: Ra ≤ 1.6 µm)
Medium data	
Operating medium	Neutral gases and liquids, highly purified, sterile, aggressive or abrasive mediums (see **resistance chart** ▶)
Medium temperature	
EPDM (AD) [1.)]	- 10...+ 143 °C (steam sterilisation + 150 °C for 60 min)
PTFE/EPDM (EA) [1.)]	- 10...+ 130 °C (steam sterilisation + 140 °C for 60 min)
Advanced PTFE/EPDM (EU) [1.)]	- 5...+ 143 °C (steam sterilisation + 150 °C for 60 min)
Laminate of GYLON® and EPDM (ER) [1.)]	- 5...+ 130 °C (steam sterilisation + 140 °C for 60 min)
Product connections	
Port connection [2.)]	
Nominal diameter	DN 06...DN 100 (⅛"...4")
Stainless steel body [2.)]	
Welded connection [2.)]	DIN EN ISO 1127 / ISO 4200 / DIN 11866 series B DIN 11850 - 2 / DIN 11866 series A / DIN EN 10357 series A ASME BPE / DIN 11866 series C
Clamp connection [2.)]	DIN 32676 series A (DIN pipe) DIN 32676 series B (ISO pipe) ASME BPE
Environment and installation	
Installation position	See **operating instructions Type 2935** ▶
Ambient temperature: actuator (diaphragm bonnet/handwheel)	
Stainless steel/PPS, PPS/PPS, stainless steel/stainless steel	- 10...+ 130 °C (short-term up to + 150 °C), autoclavable

1.) This information is part of the product key (see "6.3. Bürkert Product Enquiry Form" on page 15).
2.) Further variants are available on request.

DTS 1000584287 EN Version: K Status: RL (released | freigegeben | valide) printed: 01.06.2026

valvesgo.com

2. Approvals and conformities

2.1. General notes

- The approvals and conformities listed below must be stated when making enquiries. This is the only way to ensure that the product complies with all required specifications.
- Not all available variants can be supplied with the below mentioned approvals or conformities.
- Further information can be found in the manufacturer's declarations for our diaphragm valves on our website, see **Type 2935** ▶.

2.2. Conformity

In accordance with the Declaration of Conformity, the product is compliant with the EU Directives.

2.3. Standards

The applied standards which are used to demonstrate compliance with the EU Directives are listed in the EU-Type Examination Certificate and/or the EU Declaration of Conformity.

2.4. Explosion protection

<table>
<tr><th>Approval</th><th>Description</th></tr>
<tr><td></td><td>
Explosion protection (valid for the variable code PX51)
As a category 2 device suitable for zone 1/21 and zone 2/22.

ATEX:
EPS 18 ATEX 2 008 X
II 2G Ex h IIC T4...T2 Gb
II 2D Ex h IIIC T135 °C...T300 °C Db

IECEx:
IECEx EPS 18.0007X
Ex h IIC T4...T2 Gb
Ex h IIIC T135 °C...T300 °C Db
<table>
<tr><td>Temperature class</td><td>T2</td><td>T3</td><td>T4</td></tr>
<tr><td>Maximum surface temperature</td><td>+ 300 °C</td><td>+ 200 °C</td><td>+ 135 °C</td></tr>
<tr><td>Ambient temperature</td><td>- 40...+ 130 °C</td><td>- 40...+ 130 °C</td><td>- 40...+ 100 °C</td></tr>
<tr><td>Maximum medium temperature</td><td>+ 285 °C</td><td>+ 185 °C</td><td>+ 125 °C</td></tr>
</table>
Note: The ambient and medium temperature range may be limited by non-ex-relevant specifications. Observe the operating instructions.
</td></tr>
</table>

DTS 1000584287 EN Version: K Status: RL (released | freigegeben | valide) printed: 01.06.2026

valvesgo.com

2.5. Foods and beverages/Hygiene

Conformity	Description
	3-A Sanitary Standards Inc. (valid for the variable code PE05) The products comply with 3-A Sanitary Standards Inc (3-A SSI) as per certificate.
FDA	**FDA – Code of Federal Regulations** The diaphragms made of EPDM (AD), PTFE/EPDM (EA), advanced PTFE/EPDM (EU) and laminate of GYLON® and EPDM (ER) comply with the Code of Federal Regulations published by the FDA (Food and Drug Administration, USA).
USP	**United States Pharmacopeial Convention (USP)** The diaphragms made of EPDM (AD), PTFE/EPDM (EA), advanced PTFE/EPDM (EU) and laminate of GYLON® and EPDM (ER) are tested according to USP Class VI.
	EC Regulation 1935/2004 of the European Parliament and of the Council The diaphragms made of EPDM (AD), PTFE/EPDM (EA), advanced PTFE/EPDM (EU) and laminate of GYLON® and EPDM (ER) are suitable for use with food and beverages (according to EC Regulation 1935/2004/EC).

2.6. Others

Approval	Description
TA Luft	**Technical instruction on air quality control (valid for the variable code PM01)**

DTS 1000584287 EN Version: K Status: RL (released | freigegeben | valide) printed: 01.06.2026

valvesgo.com

valvesgo.com

3. Materials

3.1. Bürkert resistApp

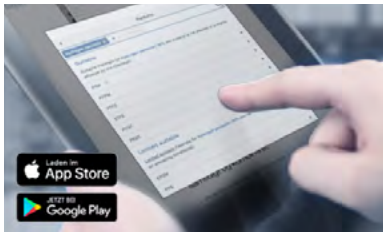

Bürkert resistApp – Chemical resistance chart

You want to ensure the reliability and durability of the materials in your individual application case? Verify your combination of media and materials on our website or in our resistApp.

Start chemical resistance check

3.2. Material specifications

Note:
Your product variant may differ from this illustration depending on the body and interface options.

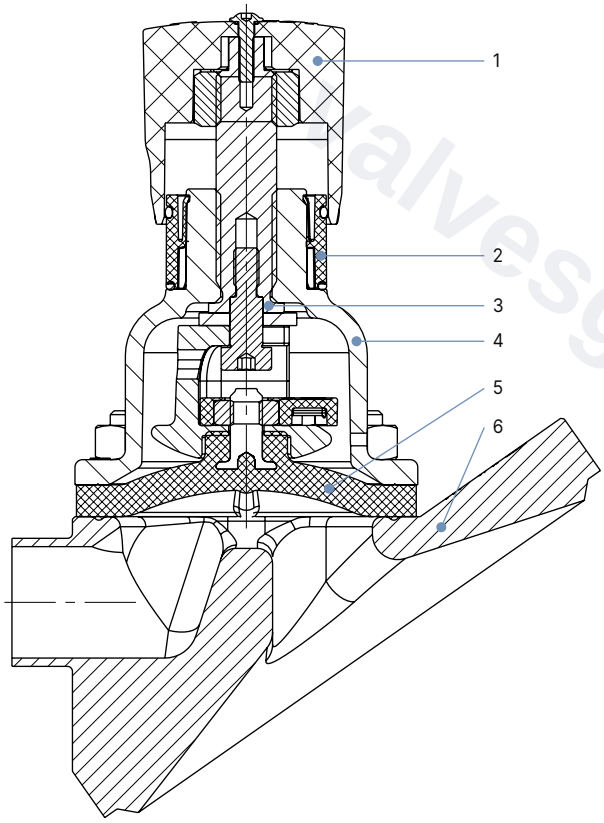

No.	Element	Material
1	Handwheel	Polyphenylene sulphide (PPS), stainless steel 1.4308
2	Visual position indicator	Polyamide (PA), stainless steel 1.4305
3	Valve spindle	Stainless steel 1.4305
4	Diaphragm bonnet	Stainless steel 1.4308, polyphenylene sulphide (PPS)
5	Diaphragm	EPDM (AD), PTFE/EPDM (EA), advanced PTFE/EPDM (EU), laminate of GYLON® and EPDM (ER)
6	Valve body	See **"1. General technical data" on page 3**.

DTS 1000584287 EN Version: K Status: RL (released | freigegeben | valide) printed: 01.06.2026

valvesgo.com

3.3. Example of available diaphragm materials

The diaphragms have been developed to meet the unique challenges of hygienic and sterile requirements. Bürkert offers diaphragms with precise material composition and high accuracy. Bürkert diaphragms are available in a wide range of materials which have been tested and proven in applications in the food and beverage, biotechnology, pharmaceutical and cosmetics industries. The diaphragms are tested during development and production to ensure reliability under difficult process conditions.

- EPDM (AD)
- PTFE/EPDM (EA)
- Advanced PTFE/EPDM (EU)
- Laminate of GYLON® and EPDM (ER)

Further information can be found in our flyer “Diaphragm competence for hygienic applications” on our **website** ▶.

DTS 1000584287 EN Version: K Status: RL (released | freigegeben | valide) printed: 01.06.2026

valvesgo.com

valvesgo.com

4. Dimensions

4.1. Manual actuator

Diaphragm size 8...25

Note:
Dimensions in mm, unless otherwise stated

Position open	Position closed
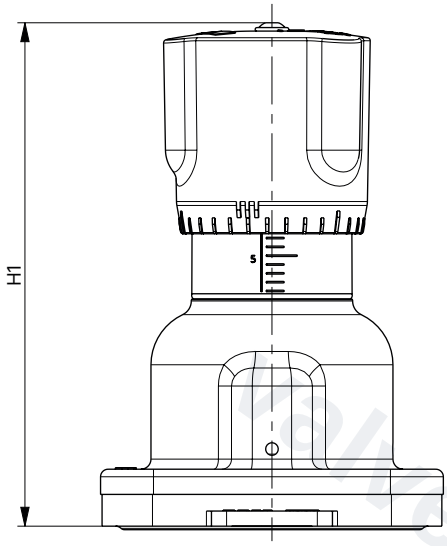	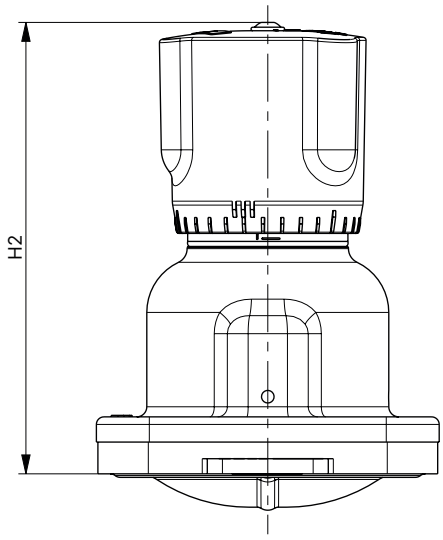

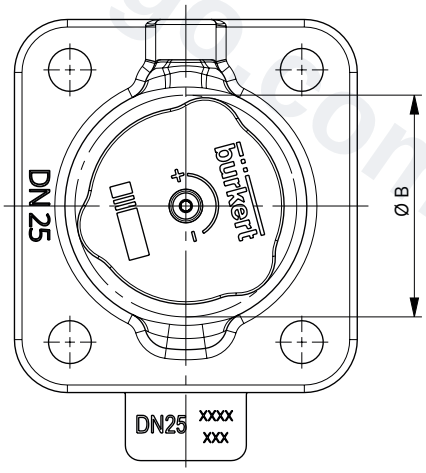

Diaphragm size	H1	H2	Ø B
8	54	49	35
15	84	78	45
20	95	86	45
25	101	90	45

DTS 1000584287 EN Version: K Status: RL (released | freigegeben | valide) printed: 01.06.2026

valvesgo.com

Diaphragm size 40...50

Note:
Dimensions in mm, unless otherwise stated

Position open	Position closed
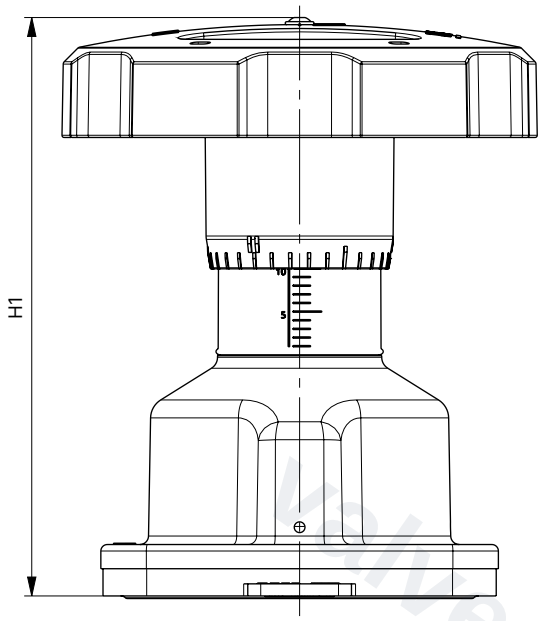	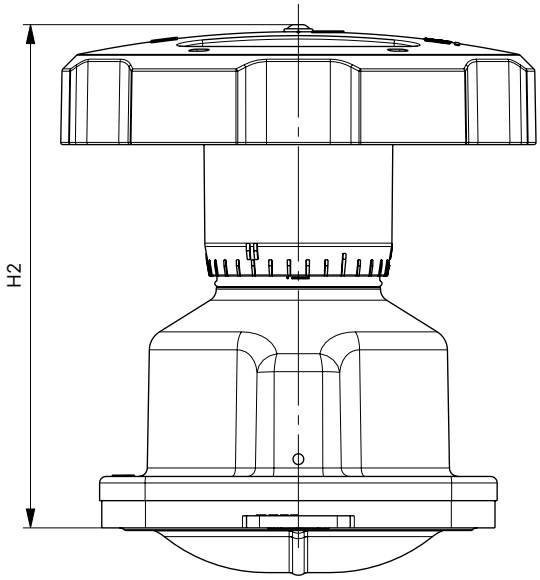

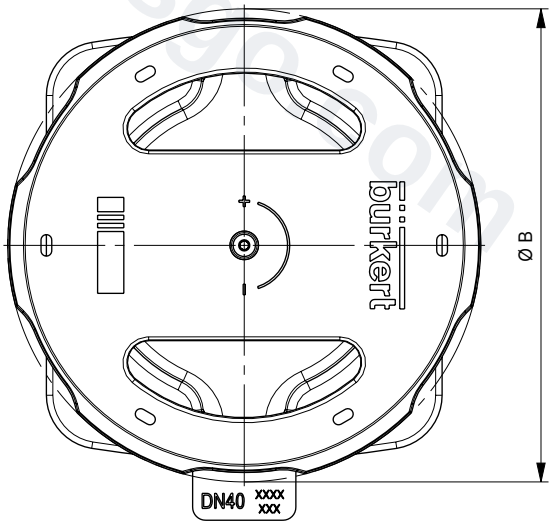

Diaphragm size	H1	H2	Ø B
40	134	116	110
50	149	125	110

DTS 1000584287 EN Version: K Status: RL (released | freigegeben | valide) printed: 01.06.2026

valvesgo.com

Diaphragm size 65...100

Note:
Dimensions in mm, unless otherwise stated

Position open	Position closed
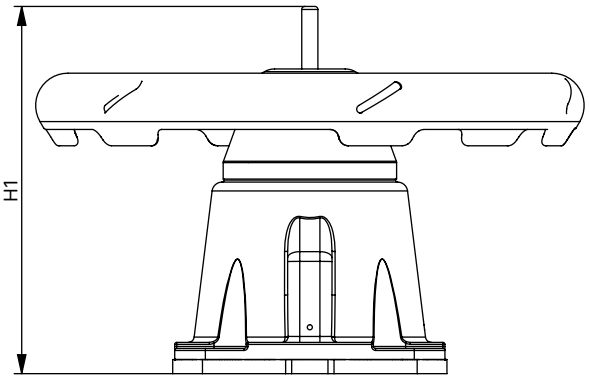	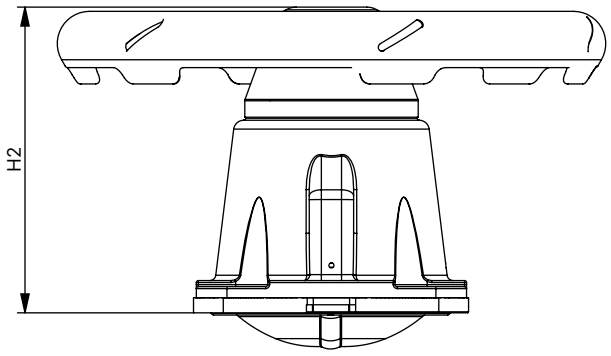

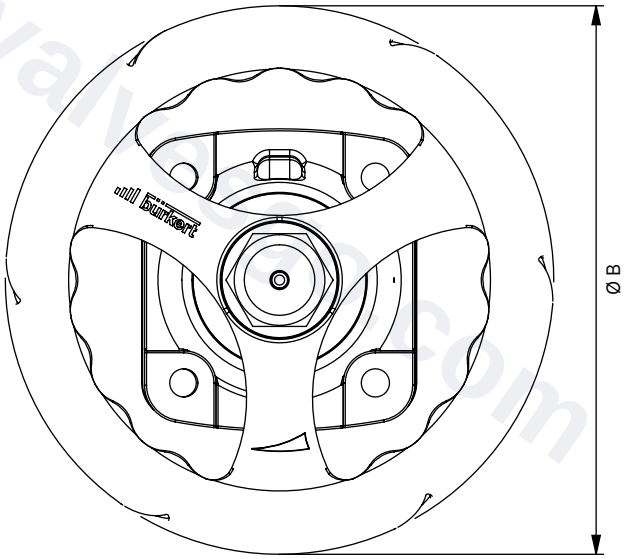

Diaphragm size	H1	H2	Ø B
65	182	152	272
80	205	163	272
100	207	161	272

DTS 1000584287 EN Version: K Status: RL (released | freigegeben | valide) printed: 01.06.2026

valvesgo.com

4.2. Manual actuator with tank bottom body

Note:
Dimensions in mm, unless otherwise stated

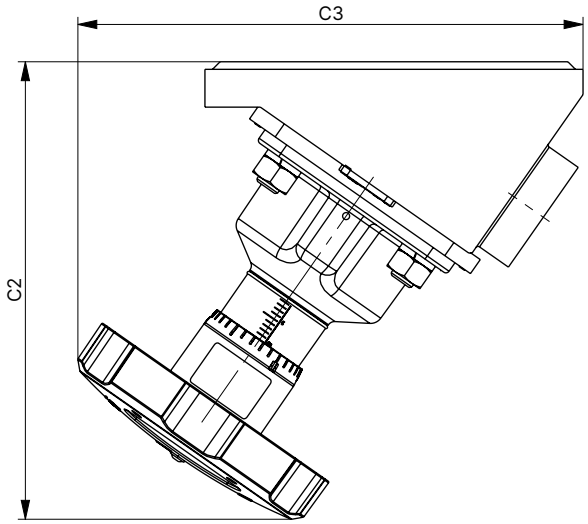

Diaphragm size	C2	C3
8	69	71
15	103	101
20	116	115
25	127	129
40	182	201
50	203	217
65	265	305
80	336	278
100	300	370

DTS 1000584287 EN Version: K Status: RL (released | freigegeben | valide) printed: 01.06.2026

valvesgo.com

valvesgo.com

4.3. Tank bottom body with welded connection

Note:
Dimensions in mm, unless otherwise stated

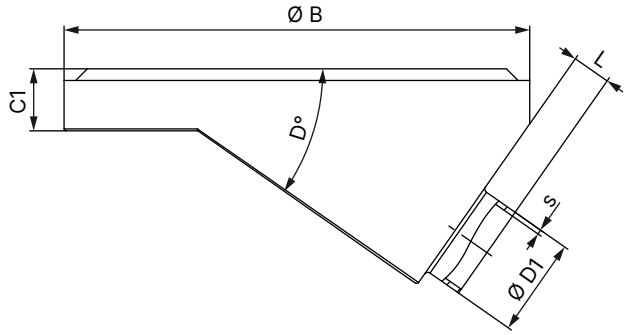

Diaphragm size	Port connection DN/Inch	Ø B	C1	D	Ø D1	s	L	Product key [1.)]
DIN EN ISO 1127 / ISO 4200 / DIN 11866 series B								
8	8	50	8	35°	13.5	1.6	5	SA40
15	15	65	12	35°	21.3	1.6	4	SA42
		85					8	SA42
20	20	85	12	35°	26.9	1.6	5.6	SA43
25	25	120	16	35°	33.7	2	8	SA44
40	32	150	18	35°	42.4 (Port 32)	2	20	SA45
	40				48.3		15	SA46
50	50	180	22	35°	60.3	2	12	SA47
80	65	225	20	40°	76.1	2	16	SA48
	80				88.9	2.3	10	SA49
100	100	298	30	40°	114.3	2.3	16.5	SA39
DIN 11850 - 2 / DIN 11866 series A / DIN EN 10357 series A								
8	10	50	8	35°	13	1.5	5	SD40
15	15	85	12	35°	19	1.5	8	SD42
20	20	85	12	35°	23	1.5	7	SD43
25	25	120	16	35°	29	1.5	8	SD44
40	40	150	18	35°	41	1.5	20	SD46
50	50	180	22	35°	53	1.5	15	SD47
80	80	225	20	40°	85	2	16	SD49
100	100	298	30	40°/35°	104	2	14	SD50
ASME BPE / DIN 11866 series C								
8	¼"	50	8	35°	6.35	0.89	6	SA90
15	½"	85	12	35°	12.7	1.65	10	SA92
20	¾"	85	12	35°	19.05	1.65	8	SA93
25	1"	120	16	35°	25.4	1.65	12	SODF
40	1½"	150	18	35°	38.1	1.65	15	SODH
50	1½"	180	22	35°	38.1	1.65	25	SODH
	2"				50.8		15	SODI
	2½"				63.5		11	SODJ
80	2½"	225	20	40°	63.5	1.65	25	SODJ
	3"				76.2		16	SODK
100	4"	298	30	40°	101.6	2.11	14	SODL
SMS 3008								
25	25	120	16	35°	25	1.2	8	SA60
40	40	150	18	35°	38	1.2	20	SA62
50	50	180	22	35°	51	1.2	15	SA63

1.) This information is part of the product key (see "6.3. Bürkert Product Enquiry Form" on page 15).

DTS 1000584287 EN Version: K Status: RL (released | freigegeben | valide) printed: 01.06.2026

valvesgo.com

4.4. Tank bottom body with clamp connection

Note:
Clamp dimensions must be added to the welded connection dimensions.

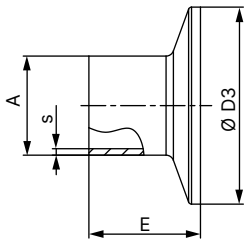

Port connection		A	s	D3	E	Product key [1.)]
DN	[inch]	[mm]	[mm]	[mm]	[mm]	
DIN 32676 series A (DIN pipe)						
10	–	13	1.5	34.0	18	TD41
15	–	19	1.5	34.0	18	TD42
20	–	23	1.5	34.0	18	TD43
25	–	29	1.5	50.5	21.5	TD44
32	–	35	1.5	50.5	21.5	TD45
40	–	41	1.5	50.5	21.5	TD46
50	–	53	1.5	64.0	21.5	TD47
65	–	70	2.0	91.0	28.0	TD48
80	–	85	2.0	106.0	28.0	TD49
100	–	104	2.0	119.0	28.0	TD50
DIN 32676 series B (ISO pipe)						
8	–	13.5	1.6	25.0	28.6	TC40
8	–	13.5	1.6	34.0 [2.)]	28.6	TC51 [2.)]
10	–	17.2	1.6	34.0 [2.)]	28.6	TC41 [2.)]
15	–	21.3	1.6	34.0 [2.)]	28.6	TC42 [2.)]
15	–	21.3	1.6	50.5	28.6	TC52
20	–	26.9	1.6	50.5	28.6	TC43
25	–	33.7	2.0	50.5	28.6	TC44
32	–	42.4	2.0	50.5 [2.)]	28.6	TC45 [2.)]
40	–	48.3	2.0	64.0	28.6	TC46
50	–	60.3	2.0	77.5	28.6	TC47
65	–	76.1	2.0	91.0	28.6	TC48
80	–	88.9	2.3	106.0	28.6	TC49
100	–	114.3	2.3	130.0	28.6	TC50
ASME BPE						
8	¼	6.35	0.89	25.0	28.6	TG50
10	⅜	9.53	0.89	25.0	28.6	TG01
15	½	12.7	1.65	25.0	28.6	TG02
20	¾	19.05	1.65	25.0	28.6	TG03
25	1	25.4	1.65	50.5	28.6	TG04
40	1½	38.1	1.65	50.5	28.6	TG05
50	2	50.8	1.65	64.0	28.6	TG06
65	2½	63.5	1.65	77.5	28.6	TG07
80	3	76.2	1.65	91.0	28.6	TG08
100	4	101.6	2.11	119.0	28.6	TG09

1.) This information is part of the product key (see "6.3. Bürkert Product Enquiry Form" on page 15).
2.) Deviating from standard, because of different clamp outer diameter

DTS 1000584287 EN Version: K Status: RL (released | freigegeben | valide) printed: 01.06.2026

valvesgo.com

5. Performance specifications

5.1. Medium pressure

Note:

- The following tightening torques refer to the static media pressures specified above. Excessive torque can shorten the service life of the diaphragm.
- Pressure data [bar]: Overpressure to atmospheric pressure. Static: When closed, the valve is pressurised on one side with the maximum operating pressure.
- A tolerance of + 10 % applies to the tightening torques specified.

Diaphragm size	Maximum static operating pressure	Tightening torque for maximum static operating pressure	
		EPDM, FKM	PTFE/EPDM, advanced PTFE/EPDM, laminate of GYLON® and EPDM
	[bar]	[Nm]	[Nm]
8	10	0.6	1.1
15	10	0.8	1.7
20	10	0.9	3
25	10	1.2	3.5
32	10	2.5	4
40	10	4.5	7
50	10	6	11
65	10	8	21
80	10	12	23
100	10	13	24

DTS 1000584287 EN Version: K Status: RL (released | freigegeben | valide) printed: 01.06.2026

valvesgo.com

valvesgo.com

6. Ordering information

6.1. Bürkert eShop

Bürkert eShop – Easy ordering and quick delivery

You want to find your desired Bürkert product or spare part quickly and order directly? Our online shop is available for you 24/7. Sign up and enjoy all the benefits.

Order online now

6.2. Bürkert product filter

Bürkert product filter – Get quickly to the right product

You want to select products comfortably based on your technical requirements?
Use the Bürkert product filter and find suitable articles for your application quickly and easily.

Try out our product filter

6.3. Bürkert Product Enquiry Form

Note:
Please see our Product Enquiry Form for a full explanation of our specification key.

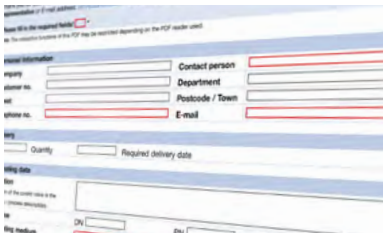

Bürkert Product Enquiry Form – Your enquiry quickly and compactly

Would you like to make a specific product enquiry based on your technical requirements? Use our Product Enquiry Form for this purpose. There you will find all the relevant information for your Bürkert contact. This will enable us to provide you with the best possible advice.

Fill out the form now

6.4. Ordering chart accessories

Description	Article no.
4-fold nylon locking mechanism with 3 mm bracket	93719475
Inductive proximity switch (initiator) M5	550412
Inductive proximity switch (initiator) M5 ATEX	904779
Inductive proximity switch (initiator) M8	902475
Inductive proximity switch (initiator) M12	902473

DTS 1000584287 EN Version: K Status: RL (released | freigegeben | valide) printed: 01.06.2026

valvesgo.com