bürkert
FLUID CONTROL SYSTEMS

Type 8644
AirLINE

With decentralized peripheral system ET200S (Siemens)

MAN 1000010121 EN Version: R Status: RL (released | freigegeben) printed: 10.10.2026

Operating Instructions

Bedienungsanleitung
Manuel d'utilisation

valvesgo.com

MAN 1000010121 EN Version: R Status: RL (released | freigegeben) printed: 10.10.2026

valvesgo.com

We reserve the right to make technical changes without notice.
Technische Änderungen vorbehalten.
Sous resérve de modification techniques.

© Bürkert Werke GmbH & Co. KG, 2002 - 2025

Operating Instructions 2504/13_EN_00804729

Type 8644 AirLINE - Siemens

Table of Contents

1. OPERATING INSTRUCTIONS 6
   1.1. Symbols 6
2. AUTHORIZED USE 7
   2.1. Restrictions 7
      2.1.1. Explosion protection approval 7
3. BASIC SAFETY INSTRUCTIONS 8
4. GENERAL INFORMATION 9
   4.1. Contact Addresses 9
   4.2. Warranty 9
   4.3. Licenses 9
   4.4. Information on the Internet 9
5. SYSTEM DESCRIPTION 10
   5.1. Application area 10
   5.2. Description of the system 10
   5.3. Structure of the system 11
   5.4. Characteristic features and advantages 12
      5.4.1. Characteristic features of AirLINE 12
      5.4.2. Advantages of AirLINE 12
   5.5. Diagram of the valve block 13
   5.6. Exploded drawing 14
      5.6.1. Exploded drawing - add-on dimension 11 mm 14
      5.6.2. Exploded drawing - add-on dimension 16.5 mm 15
6. TECHNICAL DATA 16
   6.1. Operating Conditions 16
   6.2. Technical data of the entire system 16
   6.3. Technical Data of the valve block 17
   6.4. Pneumatic data of the connection modules 19

MAN 1000010121 EN Version: R Status: RL (released | freigegeben) printed: 10.10.2026

valvesgo.com

6.4.1. Dimensioning of the connection modules 19
6.4.2. Performance features from the point of view of the entire system 20
6.5. Electrical Data 21
6.5.1. Electronic base module ME02, ME03 / 2-fold monostable 21
6.5.2. Electronic base module ME02, ME03 / 4-fold monostable 22
6.5.3. Electronic base module ME02, ME03 / 2-fold bistable 23
6.5.4. Electronic base module ME02 / 2-fold 2 x monostable 24
6.5.5. Electronic base module ME03 / 3-fold 10 mm monostable 25

7. STRUCTURE AND FUNCTION OF THE MODULES 26
7.1. Valve block 26
7.1.1. Connection modules / feeds 26
7.1.2. Valve discs MK03 27
7.2. Connection modules 29
7.2.1. Structure of the connection module 29
7.2.2. Connection modules, pneumatic - on left Type ME02 31
7.2.3. Connection modules, pneumatic - in middle Type ME02 32
7.2.4. Connection modules, pneumatic - on right Type ME02 33
7.2.5. Connection modules, pneumatic - on left Type ME03 34
7.2.6. Connection modules, pneumatic - in middle Type ME03 35
7.2.7. Connection modules, pneumatic - on right Type ME03 36
7.3. Electronic base module 37
7.3.1. General Description 37
7.3.2. Electronic base module ME02 / 2-fold monostable 39
7.3.3. Electronic base module ME02 / 4-fold monostable 40
7.3.4. Electronic base module ME02 / 2-fold bistable 41
7.3.5. Electronic base module ME02 / 2-fold 2 x monostable 42
7.3.6. Electronic base module ME03 / 2-fold monostable 43
7.3.7. Electronic base module ME03 / 4-fold monostable 44
7.3.8. Electronic base module ME03 / 3-fold 10 mm monostable 45
7.3.9. Electronic base module ME03 / 2-fold bistable 46
7.4. Pneumatic base module 47
7.4.1. General Description 47
7.4.2. Pneumatic base module with integrated P shut-off 48
7.5. Valves 50

MAN 1000010121 EN Version: R Status: RL (released | freigegeben) printed: 10.10.2026

valvesgo.com

7.5.1. General Description 50

8. INSTALLATION 53

8.1. Safety instructions 53

8.2. Removing the valve block from the top-hat rail 54

8.3. Installing the AirLINE system (e.g. in the control cabinet) 56

8.4. Changing the function module 56

8.5. Fluid Installation 57

8.5.1. Tightening torques for port connections 58

8.5.2. Pneumatic connections - feed 58

8.5.3. Removing the plug-in connections 59

8.5.4. Pneumatic connections - valve discs 59

8.6. Electrical Installation 60

9. MAINTENANCE, TROUBLESHOOTING 61

9.1. Safety instructions 61

9.2. Troubleshooting 61

9.3. Maintenance of components 62

9.3.1. UL handling 62

10. START-UP 63

10.1. Safety instructions 63

10.2. Fluid start-up 63

10.3. Electrical start-up 63

10.3.1. Selection of the modules in the GSD file 64

11. PACKAGING AND TRANSPORT 65

12. STORAGE 66

MAN 1000010121 EN Version: R Status: RL (released | freigegeben) printed: 10.10.2026

valvesgo.com

1. OPERATING INSTRUCTIONS

The operating instructions describe the entire life cycle of the device. Keep these instructions in a location which is easily accessible to every user, and make these instructions available to every new owner of the device.

WARNING!

The operating instructions contain important safety information!

Failure to observe these instructions may result in hazardous situations.

- The operating instructions must be read and understood.

1.1. Symbols

DANGER!

Warns of an immediate danger!

- Failure to observe the warning will result in a fatal or serious injury.

WARNING!

Warns of a potentially dangerous situation!

- Failure to observe the warning may result in serious injuries or death.

CAUTION!

Warns of a possible danger!

- Failure to observe this warning may result in a moderate or minor injury.

NOTE!

Warns of damage to property!

- Failure to observe the warning may result in damage to the device or the equipment.

Indicates important additional information, tips and recommendations.

Refers to information in these operating instructions or in other documentation.

→ designates a procedure which you must carry out.

MAN 1000010121 EN Version: R Status: RL (released | freigegeben) printed: 10.10.2026

valvesgo.com

2. AUTHORIZED USE

Non-authorized use of the AirLINE may be dangerous to people, nearby equipment and the environment.

- Only use devices that are approved for this type of potentially explosive atmosphere. These devices are labelled with the ATEX label on the type label. When using, always observe the details on the type label and the instructions for the potentially explosive atmosphere included in the scope of delivery for the device.
- Do not use the device outdoors unprotected.
- Use according to the authorized data, operating conditions and conditions of use specified in the contract documents and operating instructions. These are described in the chapter entitled "6. Technical Data".
- The device may be used only in conjunction with third-party devices and components recommended and authorized by Bürkert.
- Do not supply the medium connectors of the system with aggressive or flammable mediums.
- Do not physically stress the housing (e.g. by placing objects on it or standing on it).
- Correct transportation, correct storage and installation and careful use and maintenance are essential for reliable and faultless operation.
- Use the device only as intended.

The AirLINE-System Type 8644 was developed with due consideration given to accepted safety rules and is state-of-the-art. Nevertheless, dangerous situations may occur.

2.1. Restrictions

If exporting the system/device, observe any existing restrictions.

2.1.1. Explosion protection approval

The explosion protection approval is only valid if you use the modules and components authorized by Bürkert, as described in these operating instructions.

The electronic modules may only be used in combination with the pneumatic valve types that have been approved by Bürkert. Otherwise, the Ex approval will expire!

If you make unauthorized changes to the system, the modules or components, the explosion protection approval will also be terminated.

MAN 1000010121 EN Version: R Status: RL (released | freigegeben) printed: 10.10.2026

valvesgo.com

valvesgo.com

3. BASIC SAFETY INSTRUCTIONS

These safety instructions do not make allowance for any:

- Contingencies and events which may arise during the installation, operation and maintenance of the devices.
- Local safety regulations – the operator is responsible for observing these regulations, also with reference to the installation personnel.

Danger – high pressure!

- Before dismounting pneumatic lines and valves, turn off the pressure and vent the lines.

Risk of electric shock!

- Before reaching into the device or the equipment, switch off the power supply and secure to prevent reactivation!
- Observe applicable accident prevention and safety regulations for electrical equipment!

Risk of burns/risk of fire if used continuously through hot device surface!

- Keep the device away from highly flammable substances and media and do not touch with bare hands.

General hazardous situations.

To prevent injury, ensure:

- That the system cannot be activated unintentionally.
- Installation and repair work may be carried out by authorized technicians only and with the appropriate tools.
- After an interruption in the power supply or pneumatic supply, ensure that the process is restarted in a defined or controlled manner.
- The device may be operated only when in perfect condition and in consideration of the operating instructions.
- Note that pipes and valves must not become detached in systems which are under pressure.
- Before reaching into the system, always switch off the power supply!
- Design the pressure supply with the largest possible volume to prevent a pressure drop when the system is switched on.
- The general rules of technology apply to application planning and operation of the device.

NOTE!

Operate system with direct current only!
To prevent damage to the system, use only direct current for the system power supply.

Prevent a pressure drop!
To prevent a pressure drop, design the system pressure supply with the largest possible volume.

Electrostatic sensitive components / assemblies!
The device contains electronic components which react sensitively to electrostatic discharge (ESD). Contact with electrostatically charged persons or objects is hazardous to these components. In the worst case scenario, they will be destroyed immediately or will fail after start-up.

- Observe the requirements in accordance with EN 61340-5-1 and 5-2 to minimize or avoid the possibility of damage caused by sudden electrostatic discharge!
- Also, ensure that you do not touch electronic components when the power supply voltage is present!

MAN 1000010121 EN Version: R Status: RL (released | freigegeben) printed: 10.10.2026

valvesgo.com

4. GENERAL INFORMATION

4.1. Contact Addresses

Germany

Bürkert Fluid Control Systems
Sales Center
Chr.-Bürkert-Str. 13-17
D-74653 Ingelfingen
Tel. + 49 (0) 7940 - 10 91 111
Fax + 49 (0) 7940 - 10 91 448
E-mail: info@de.buerkert.com

International

Contact addresses can be found on the final pages of the printed operating instructions.

And also on the Internet at: www.burkert.com

4.2. Warranty

The warranty is only valid if the device is used as intended in accordance with the specified application conditions.

4.3. Licenses

The approval rating on the Bürkert labels refers to Bürkert products. To ensure that the complete valve cluster is authorized, a gateway with a Type Examination Certificate must also be used. In this case a valve cluster can be expanded up to 64 valves with authorized, type-tested units.

4.4. Information on the Internet

The operating instructions and data sheets for Type 8644 can be found on the Internet at:

www.burkert.com

Technical data, configuration files and a detailed description on the ET200S system and associated terminal and electronic modules from Siemens can be found on the homepage:

www.automation.siemens.com → ET200S

Bürkert has no influence on the reliability of this homepage or on technical or presentation changes to the linked pages.

MAN 1000010121 EN Version: R Status: RL (released | freigegeben) printed: 10.10.2026

valvesgo.com

5. SYSTEM DESCRIPTION

5.1. Application area

The AirLINE system is designed for decentralized use in industrial environments. Electronics and fluidics can be combined particularly easily and efficiently thanks to the modular design.

DANGER!

Danger of explosion!

If systems in the explosion-protected area are installed in a control cabinet, the following requirements must be met:

- The control cabinet must be authorized for use in the explosion-protected area.
- The control cabinet must be large enough to allow the resulting lost heat to be dissipated in a suitable manner to the outside.
- The internal temperature of the control cabinet must not exceed the max. permitted ambient temperature for the device.

Risk of electric shock!

- Before reaching into the device or the equipment, switch off the power supply and secure to prevent reactivation!
- Observe applicable accident prevention and safety regulations for electrical equipment!

5.2. Description of the system

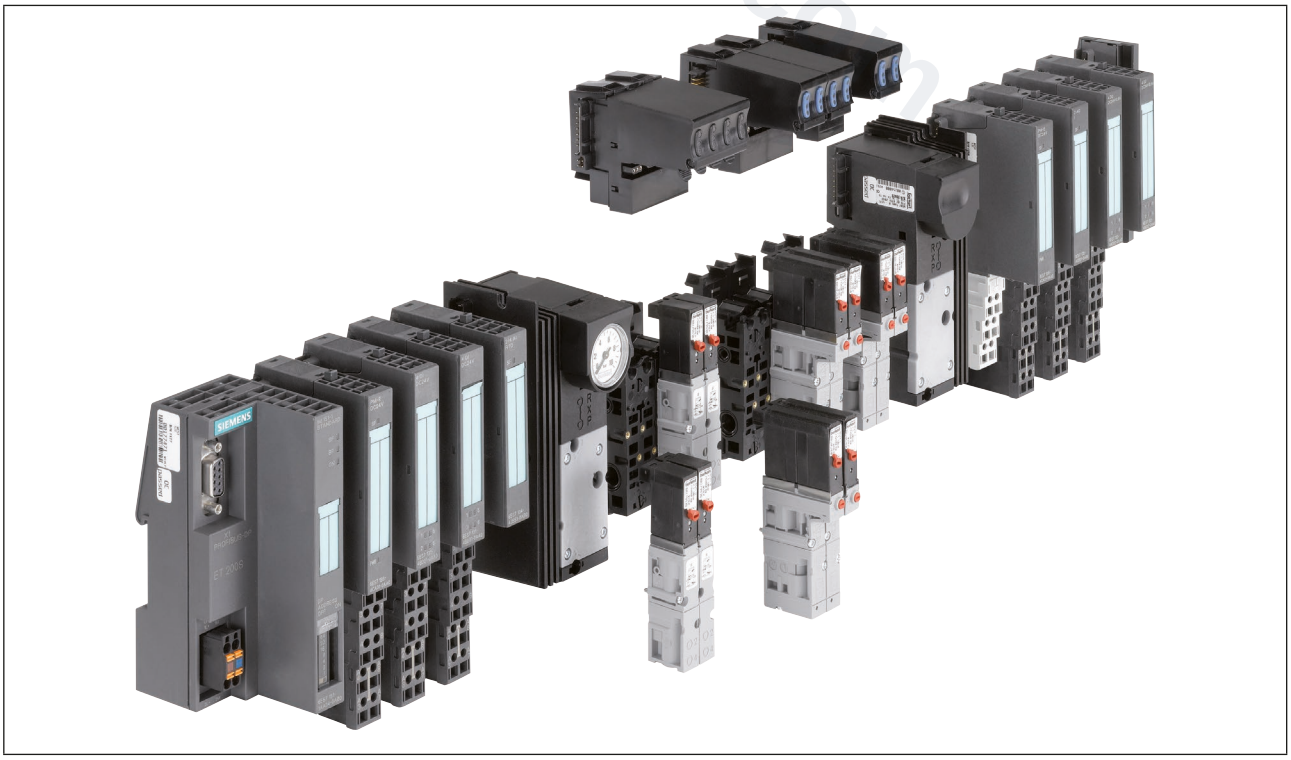

Figure 1: Type 8644 AirLINE Siemens

MAN 1000010121 EN Version: R Status: RL (released | freigegeben) printed: 10.10.2026

valvesgo.com

The Type 8644 Bürkert AirLINE is an electrical and pneumatic automation system which was developed for use in the control cabinet or switch box. In a continuous system all electronic and pneumatic components are standardized, enabling pneumatic, electric and electronic modules with various functions to be combined very easily with each other by the observation of simple rules. All components are connected by a locking mechanism. At the same time the required electrical connections are also established. For example, valves and power outputs can be combined with one field bus connection only. A large number of electrical modules (terminals) can be combined very easily with the valves mounted on special pneumatic modules (valve discs).

In its minimum configuration the system consists of the interface module IM151, a power module and the valve block. Electronic modules of the ET200S system can be installed before and after the valve block. A power module must always be provided after the interface module and without fail before the valve block. If the configuration requires electronic modules after the valve block, a power module must be placed without fail after the valve block or before the electronic modules, as the power supply voltage must be fed again. The maximum configuration of the decentralized peripheral device comprises 64 nodes (including interface module, power modules, peripheral modules and pneumatic base modules).

In its maximum configuration the valve block comprises 64x 11 mm (ME02) add-on dimension valves and 32x 16.5 mm (ME03) add-on dimension valves which function monostably. If the configuration of the valve block also provides for valves of Type 0461, a maximum of 24x 16.5 mm add-on dimension valves is authorized.

The ET200S supports the removal and insertion of modules during operation (RUN operating state). The function module can be removed during operation the same as the electronic modules of the ET200S. However, the operating pressure must be switched off beforehand! To do this, it is essential to observe Chapter "7. Structure and function of the modules".

5.3. Structure of the system

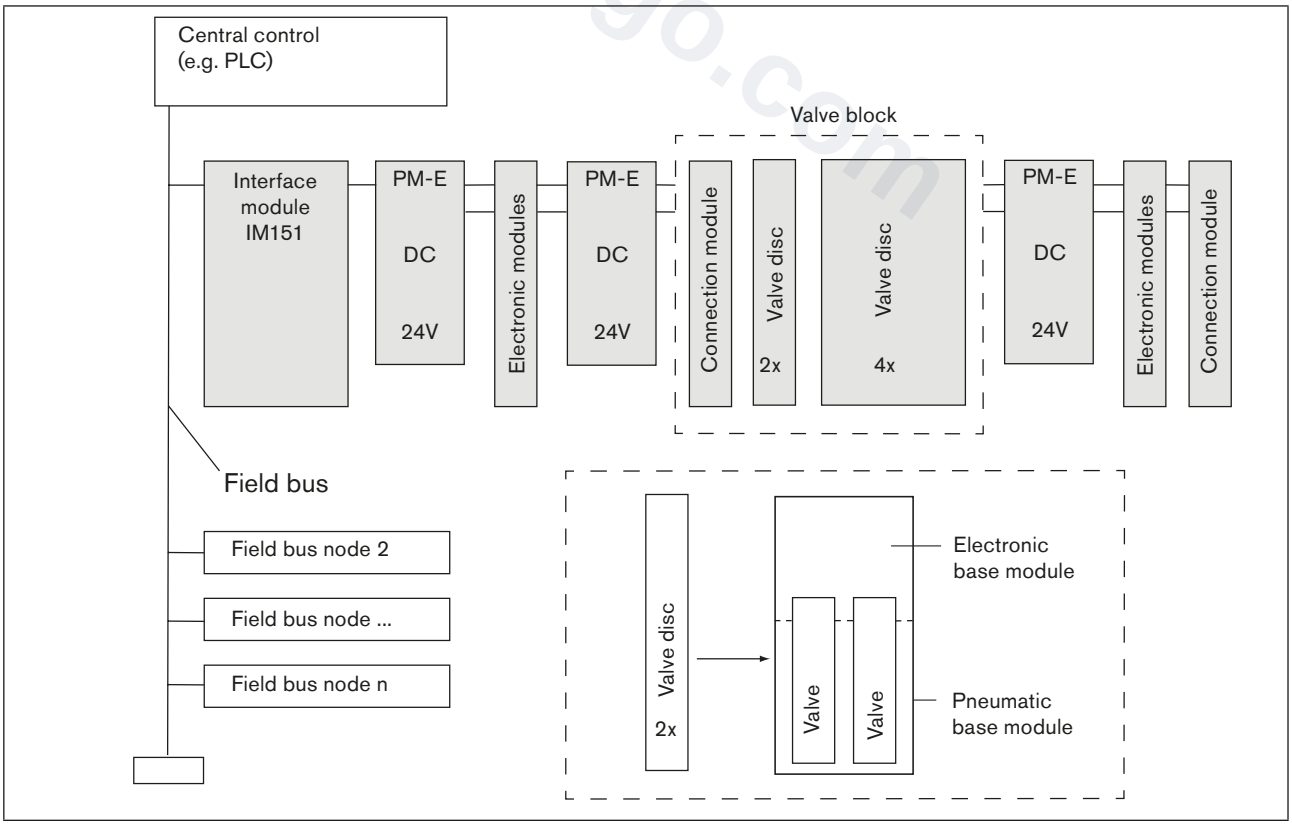

Figure 2: Schematic diagram of the Bürkert AirLINE system

MAN 1000010121 EN Version: R Status: RL (released | freigegeben) printed: 10.10.2026

valvesgo.com

5.4. Characteristic features and advantages

5.4.1. Characteristic features of AirLINE

- Easy to handle
- Function block-oriented structure of the switch box or control cabinet
- Automatic setup of potential groups, electric, data, and safety circuits
- Open, flexible and modular structure
- Combination of the valve discs and terminals in different granularity (2-fold, 4-fold,...) for space-optimized station structure

5.4.2. Advantages of AirLINE

- Flow-optimized valve structure:
  - Pressure range of vacuum up to 10 bar
  - Flow-rate of approx. 300 l/min or 700 l/min with a valve width of 10 mm or 16 mm
- Integration of non-return valves in pneumatic base module (optional)
- Long service life thanks to flipper technology with oiled and unoiled air
- Simple combination of different functions, configuration and expansion thanks to high modularity
- Numerous valve functions: 3/2, 5/2 (monostable, bistable) and 5/3-way functions
- Mechanical emergency manual override
- Different pressure stages possible in one chain
- Integration of pressure gauges to indicate operating pressure
- Centralized compressed-air supply via connection modules on both sides, as well as intermediate feed possible

valvesgo.com

MAN 1000010121 EN Version: R Status: RL (released | freigegeben) printed: 10.10.2026

5.5. Diagram of the valve block

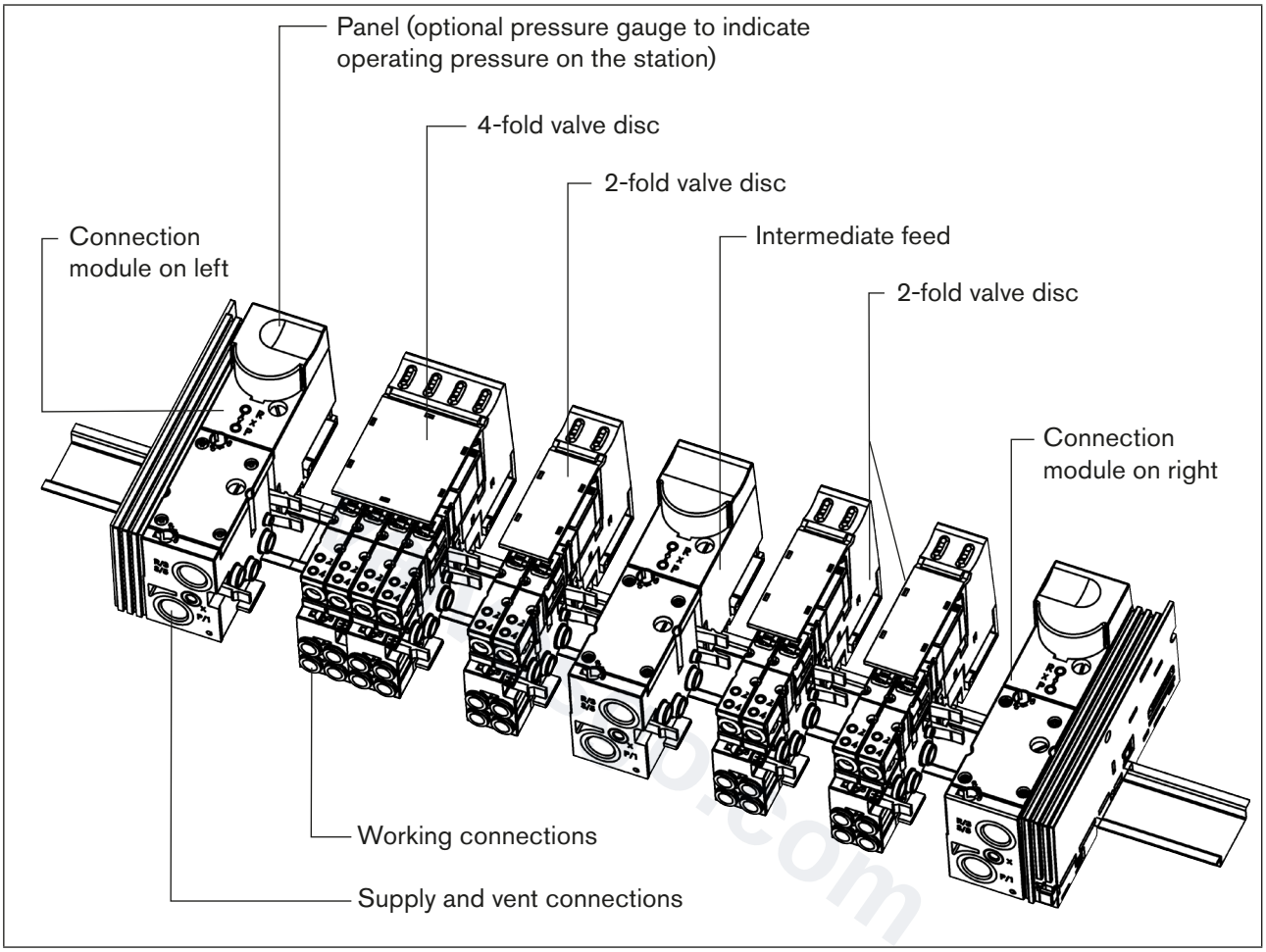

Figure 3: Diagram of the modules of the Bürkert AirLINE system

MAN 1000010121 EN Version: R Status: RL (released | freigegeben) printed: 10.10.2026

valvesgo.com

5.6. Exploded drawing

5.6.1. Exploded drawing - add-on dimension 11 mm

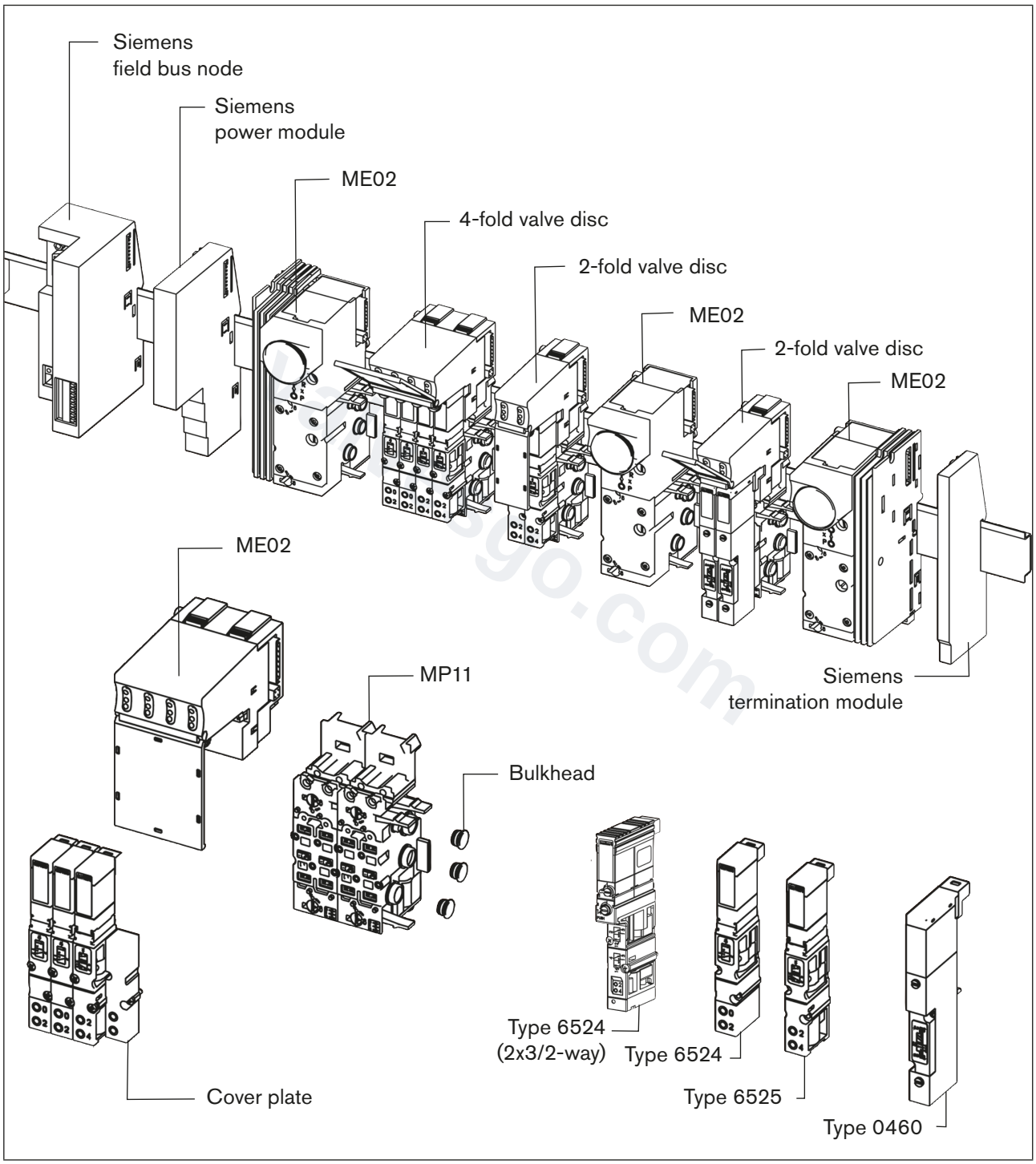

Figure 4: Exploded drawing - add-on dimension 11 mm

MAN 1000010121 EN Version: R Status: RL (released | freigegeben) printed: 10.10.2026

5.6.2. Exploded drawing - add-on dimension 16.5 mm

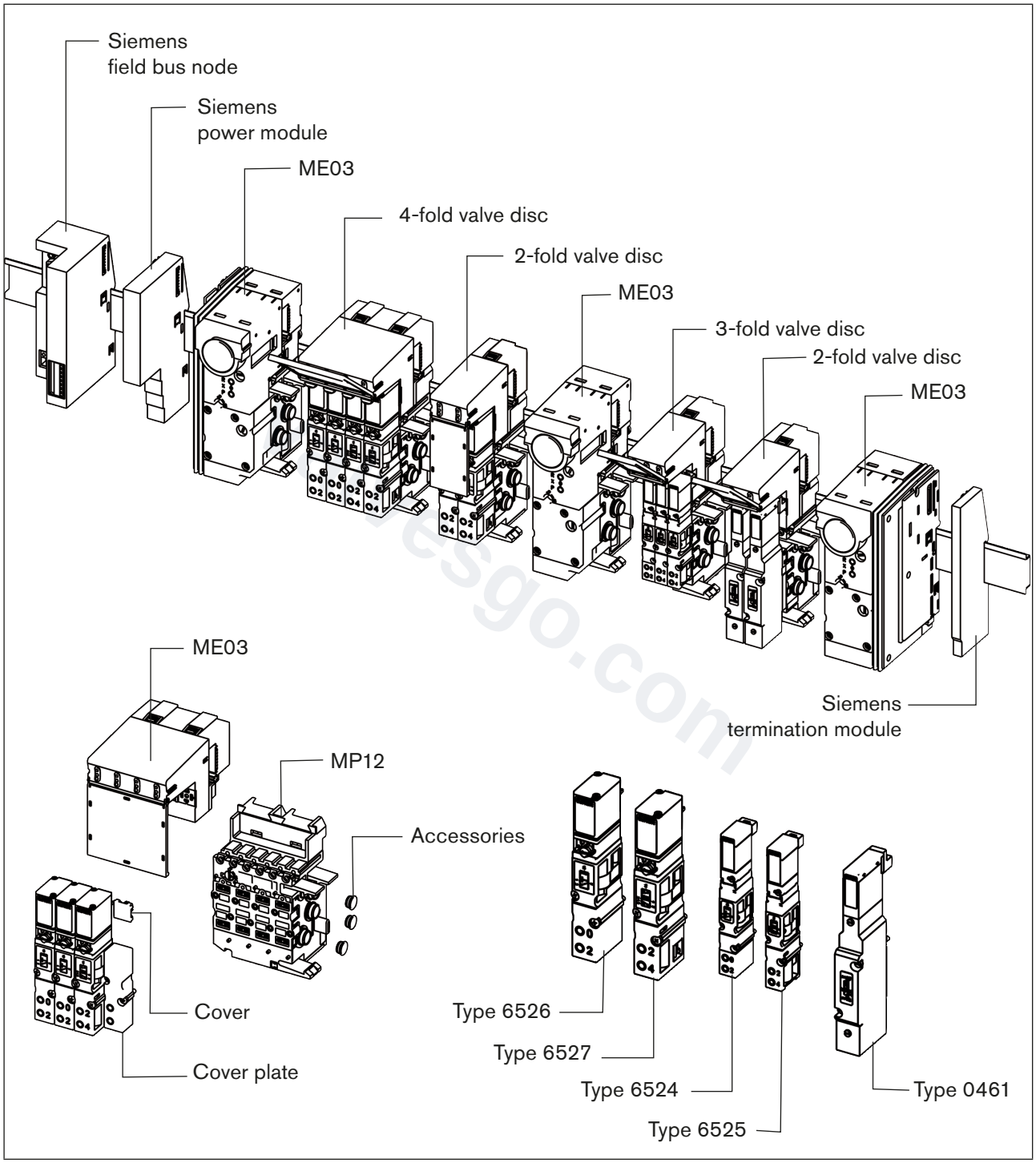

Figure 5: Exploded drawing - add-on dimension 16.5 mm

MAN 1000010121 EN Version: R Status: RL (released | freigegeben) printed: 10.10.2026

6. TECHNICAL DATA

6.1. Operating Conditions

WARNING!

Risk of injury!

Malfunction if used outside!

- Do not use Type 8644 AirLINE system outdoors and avoid heat sources which may cause the permitted temperature range to be exceeded.

Permitted temperatures

Storage temperature:	-20 ... +60 °C
Permitted air humidity:	75% on average, 85% occasionally
Permitted air pressure	
Operation:	80 kPa to 106 kPa (up to 2,000 m above sea level)
Storage / transport:	70 kPa to 106 kPa (up to 3,000 m above sea level)
Protection class:	Class 3 in accordance with VDE 106, IEC 60536
Protection class:	IP20 in accordance with IEC 60529

6.2. Technical data of the entire system

Electrical power supply

Nominal voltage	24 V / DC
Tolerance	-15 % / +20 %
Valve types: 0460, 0461	-10 % / +10 %
Valve type: 6524 (2 x 3/2-way)	-15 % / +10 %

Current carrying capacity

Valve block (via connection module on left): max. 2.5 A

Valve type	Valve flow	
	before power reduction	after power reduction
6524	43 mA	28 mA
6524 (2 x 3/2-way)	43 mA	18 mA
6525	43 mA	28 mA
6526 (1W / 2 W)	42 / 85 mA	33 / 52 mA
6527 (1W / 2 W)		
0460	41 mA	-
0461	41 mA	-

MAN 1000010121 EN Version: R Status: RL (released | freigegeben) printed: 10.10.2026

valvesgo.com

Max. power consumption

Logic current	I_Log = I_Log_FBKN + Σ I_Module
I_Log	Power consumption in the logic area
I_Log_FBKN	Proportionate current in the field bus node ET200S max. 150 mA
I_Module	Proportionate current in the logic area of the electronic base modules max 10 mA each

Field bus node see Siemens handbook

The permitted ambient temperature depends on the modules used. The most critical module is essential during assembly.

Module with: Valve type: 6524, 6525, 6526, 6527	0 ... +55° C
Module with: Valve type: 0460, 0461	0 ... +50° C

6.3. Technical Data of the valve block

Nominal operating mode	Long-term operation (100 % ED)
Protection class (in terminal design)	IP20
Protection class	3 in accordance with VDE 0580
Total current	depends on electrical connection technology, expansion stage and control

Add-on dimension	**11 mm**		
Operating principle Valve	C/D (3/2-way) Type 6524	2XC (2 x 3/2-way) Type 6524	L/N (5/3-way) Type 0460***
Operating principle Valve	H (5/2-way) Type 6525	-	H (5/2-impulse) Type 0460
Flow-rate	300 l/min	300 l/min	200 l/min
Pressure range (with P shut-off)	2.5 ... 7 bar 5 – 7 bar	2.5 ... 7 bar	2.5 ... 7 bar
Output	1 W *	2 x 1 W with power reduction	2 x 0.9 W
Current before power reduction	43 mA	2 x 43 mA	41 mA
Current after power reduction	28 mA	2 x 18 mA	-
Valve locations (max.)	64	32	32
Electrical modules	2-fold, 4-fold monostable	2-fold 2 x monostable	2-fold bistable
Pneumatic modules	2-fold	2-fold bistable	2-fold bistable

MAN 1000010121 EN Version: R Status: RL (released | freigegeben) printed: 10.10.2026

valvesgo.com

Ambient temperature	0 ... +55 °C	0 ... +55 °C	0 ... +55 °C
Operating voltage	24 V / DC, -15 % / +20 % tolerance**, Residual ripple for field bus interface 5 %		

* Power reduction (in the module)
** For the Ex-version maximum +10 %
*** The following restrictions apply to the power supply tolerances of the entire system (see Technical Data of the entire system): Valve type: 0460 ± 10 %

Add-on dimension	**16.5 mm**		
Operating principle Valve	C/D (3/2-way) Type 6526		L/N (5/3-way) Type 0461***
Operating principle Valve	H (5/2-way) Type 6527		H (5/2-impulse) Type 0461
Flow-rate	700 l/min		500 l/min
Pressure range (with P shut-off)	2 ... 10 bar		2.5 ... 7 bar
Output	1 W	2 W	2 x 1 W
Current before power reduction	42 mA	85 mA	41 mA
Current after power reduction	33 mA	52 mA	-
Valve locations (max.)	32		24
Electrical modules	2-fold, 3-fold*, 4-fold		2-fold bistable
Pneumatic modules	2-fold, 3-fold*, 4-fold		2-fold bistable
Ambient temperature	0 ... +55° C		0 ... +55° C
Operating voltage	24 V / DC, -15 % / +20 % tolerance**, Residual ripple for field bus interface 5 %		

* 3 x 10 mm valves for add-on dimension of 16.5
** For the Ex-version maximum +10 %
*** The following restrictions apply to the power supply tolerances of the entire system (see Technical Data of the entire system): Valve type: 0461 ± 10 %

Interface (PROFIBUS)

PROFIBUS	Copper line (RS-485), connected via PROFIBUS plug, supply isolated, shielding connected galvanically to the functional earth
Recommended cable lengths	see PROFIBUS system data

MAN 1000010121 EN Version: R Status: RL (released | freigegeben) printed: 10.10.2026

valvesgo.com

6.4. Pneumatic data of the connection modules

Permitted temperature (storage / transport)	-20 ... +60° C
Permitted air humidity (operation)	75 % on average, 85 % occasionally

CAUTION!

In the range of 0 – +55 °C take suitable measures against increased air humidity (> 85 %).

Slight condensation may occasionally occur on the external housing for a brief period, e.g. if the feed of a vehicle is brought into a closed room.

Permitted air pressure operation:	80 kPa to 106 kPa (up to 2,000 m above sea level)
Storage / transport:	70 kPa to 106 kPa (up to 3,000 m above sea level)
Protection class	Class 3 in accordance with VDE 106, IEC 60536
Protection class	IP20 in accordance with IEC 60529

6.4.1. Dimensioning of the connection modules

	ME02 left	ME03 left	ME02 middle	ME03 middle
Housing dimensions (width x height x depth)	67 x 73 x 125 mm (including catch hook)	80 x 95 x 142 mm (including catch hook)	50 x 71 x 119 mm (including catch hook)	62 x 93 x 142 mm (including catch hook)
Weight	220 g	400 g	118 g	335 g

	ME02 right	ME03 right
Housing dimensions (width x height x depth)	51 x 73 x 119 mm	61 x 95 x 142 mm
Weight	220 g	390 g

MAN 1000010121 EN Version: R Status: RL (released | freigegeben) printed: 10.10.2026

valvesgo.com

6.4.2. Performance features from the point of view of the entire system

Connection module on left (ME02, ME03)

The connection module on left is electrically passive

→ logical	no process image, therefore no address is required
→ mechanical	ME02 - 47 mm installation dimension ME03 - 56 mm installation dimension
→ electrical	no power consumption
→ fluid	left restriction of the valve block, left feed

Connection module in middle (ME02, ME03)

The intermediate feed is electrically passive

→ logical	no process image, therefore no address is required
→ mechanical	ME02 - 33 mm add-on dimension ME03 - 42 mm add-on dimension
→ electrical	no power consumption
→ fluid	additional feed

Connection module on right

The connection module on right is electrically passive

→ logical	no process image, therefore no address is required
→ mechanical	ME02 - 47 mm installation dimension ME03 - 56 mm installation dimension
→ electrical	no power consumption
→ fluid	right restriction of the valve block, right feed

valvesgo.com

MAN 1000010121 EN Version: R Status: RL (released | freigegeben) printed: 10.10.2026

6.5. Electrical Data

6.5.1. Electronic base module ME02, ME03 / 2-fold monostable

Technical Data	ME02 / 2-fold monostable	ME03 / 2-fold monostable
Dimensions WxHxD	22 x 70.5 x 52 mm	33 x 93 x 60 mm
Weight	35 g	47 g
Storage temperature	-20 ... +60° C	-20 ... +60° C
Nominal load voltage	DC 24 V	DC 24 V
Number of valve outputs	2	2
Power consumption per valve location during switching	43 mA	85 mA
Power consumption per valve location after approx. 120 ms (for ME03 approx. 400 ms)	28 mA	52 mA
Power consumption from the backplane bus	max. 10 mA	max. 10 mA
Display of the valve status	1 yellow LED per valve location	1 yellow LED per valve location
Power loss of the module at the point of switching	2 W	4 W
Power loss of the module 100 ms after the switching process (2 x 0.25 W power loss on resistors, 2 x 0.25 W on valve coils)	1 W	-
Power loss of the module 400 ms after the switching process (2 x 0.5 W power loss on resistors, 2 x 0.5 W on valve coils)	-	2 W

MAN 1000010121 EN Version: R Status: RL (released | freigegeben) printed: 10.10.2026

valvesgo.com

6.5.2. Electronic base module ME02, ME03 / 4-fold monostable

Technical Data	ME02 / 4-fold monostable	ME03 / 4-fold monostable
Dimensions WxHxD	44 x 70.5 x 52 mm	66 x 93 x 60 mm
Weight	56 g	75 g
Storage temperature	-20 ... +60° C	-20 ... +60° C
Nominal load voltage	DC 24 V	DC 24 V
Number of valve outputs	4	4
Power consumption per valve location during switching	43 mA	85 mA
Power consumption per valve location after approx. 120 ms (for ME03 approx. 400 ms)	28 mA	52 mA
Power consumption from the backplane bus	max. 10 mA	max. 10 mA
Display of the valve status	1 yellow LED per valve location	1 yellow LED per valve location
Power loss of the module at the point of switching	4 W	8 W
Power loss of the module 120 ms after the switching process (4 x 0.25 W power loss on resistors, 4 x 0.25 W on valve coils)	2 W	-
Power loss of the module 400 ms after the switching process (4 x 0.5 W power loss on resistors, 4 x 0.5 W on valve coils)	-	4 W

valvesgo.com

MAN 1000010121 EN Version: R Status: RL (released | freigegeben) printed: 10.10.2026

6.5.3. Electronic base module ME02, ME03 / 2-fold bistable

Technical Data	ME02 / 2-fold bistable	ME03 / 2-fold bistable
Dimensions WxHxD	22 x 70.5 x 52 mm	33 x 93 x 60 mm
Weight	35 g	44 g
Storage temperature	-20 ... +60° C	-20 ... +60° C
Nominal load voltage	DC 24 V	DC 24 V
Number of valve outputs	2	2
Power consumption per valve location	41 mA	41 mA
Power consumption from the backplane bus	max. 10 mA	max. 10 mA
Display of the valve status	2 yellow LED per valve location	2 yellow LED per valve location
Power loss of the module (Type 0460)	1.8 W	-
Power loss of the module (Type 0461)	-	1.8 W

Valvesgo.com

MAN 1000010121 EN Version: R Status: RL (released | freigegeben) printed: 10.10.2026

6.5.4. Electronic base module ME02 / 2-fold 2 x monostable

Technical Data	ME02 / 2-fold 2 x monostable
Dimensions WxHxD	22 x 70.5 x 52 mm
Weight	38 g
Storage temperature	-20 ... +60° C
Nominal load voltage	DC 24 V
Number of valve outputs	2 x 2
Power consumption per valve location	2 x 43 mA
Power consumption per valve location after 110 ms	2 x 18 mA
Power consumption from the backplane bus	max. 10 mA
Display of the valve status	2 yellow LED per valve location
Power loss of the module at the point of switching	4 W
Power loss of the module 110 ms after the switching process	1 W

valvesgo.com

MAN 1000010121 EN Version: R Status: RL (released | freigegeben) printed: 10.10.2026

6.5.5. Electronic base module ME03 / 3-fold 10 mm monostable

Technical Data	ME03 / 3-fold 10 mm monostable
Dimensions WxHxD	33 x 93 x 60 mm
Weight	45 g
Storage temperature	-20 ... +60° C
Nominal load voltage	DC 24 V
Number of valve outputs	3
Power consumption per valve location during switching	43 mA
Power consumption per valve location after approx. 120 ms	28 mA
Power consumption from the backplane bus	max. 10 mA
Display of the valve status	1 yellow LED per valve location
Power loss of the module at the point of switching	3 W
Power loss of the module 120 ms after the switching process (3 x 0.25 W power loss on resistors, 3 x 0.25 W on valve coils)	1.5 W

Valvesgo.com

MAN 1000010121 EN Version: R Status: RL (released | freigegeben) printed: 10.10.2026

7. STRUCTURE AND FUNCTION OF THE MODULES

7.1. Valve block

The valve block is composed of the following assemblies:

- Connection modules / feeds (grouped connections for supply, exhaust air and control assist air),
- Valve discs (working connections, various valves).

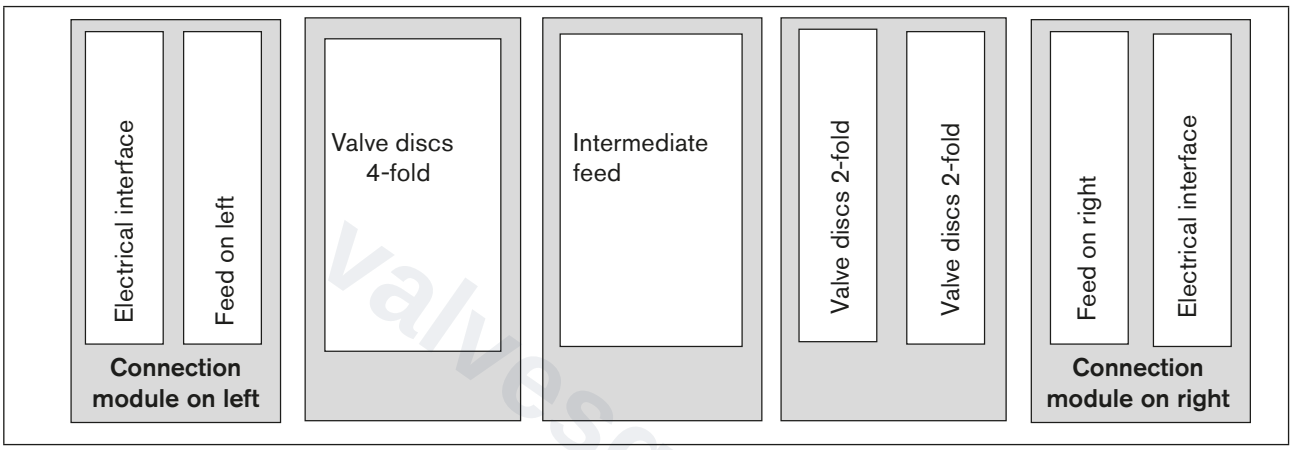

Figure 6: Example of a valve block, schematic

The electric automation system pneumatically forms a complete unit externally. Thanks to the modular design, the number of internal bus users as well as the power consumption of the valve block can vary. Externally the valve block, like any electrical module/terminal, provides a standardized electrical interface.

If the configuration of the valve block also includes valves of Type 0461 (5/2-way impulse valve, 5/3-way valve), a profile rail EN 50022-35 x 15 must be used. In all other cases this profile rail is also recommended.

7.1.1. Connection modules / feeds

Feeds in the form of pneumatic connection modules form the fluid interface between supply line and internal supply structure. The fluid is conveyed from one valve disc to the next via the feed. To ensure that the supply pressure remains almost constant over the entire route, additional feeds may be required. It is recommended to place an additional feed after 24 (ME02) or 16 (ME03) valve locations. The use of intermediate feeds also allows segments to be established if the pneumatic conduits between individual valve discs are sealed.

MAN 1000010121 EN Version: R Status: RL (released | freigegeben) printed: 10.10.2026

valvesgo.com

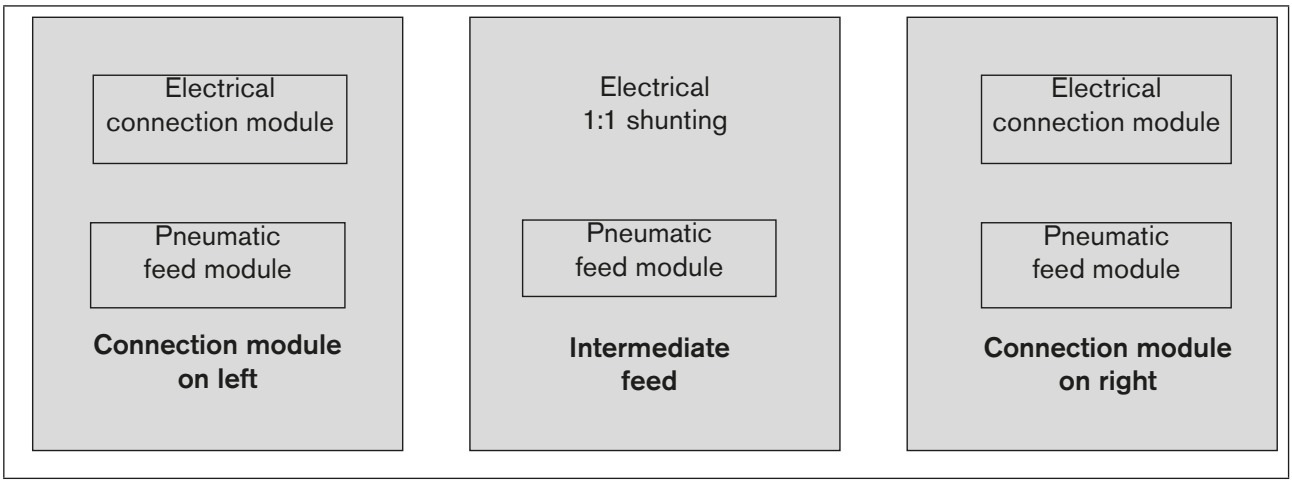

Figure 7: Schematic representation of feed

7.1.2. Valve discs MK03

DANGER!

Danger – high pressure!

- Before dismounting pneumatic lines and valves, turn off the pressure and vent the lines.

Structure

Valve discs are modular in design and consist of:

- Electronic base modules,
- Pneumatic base modules,
- Valves.

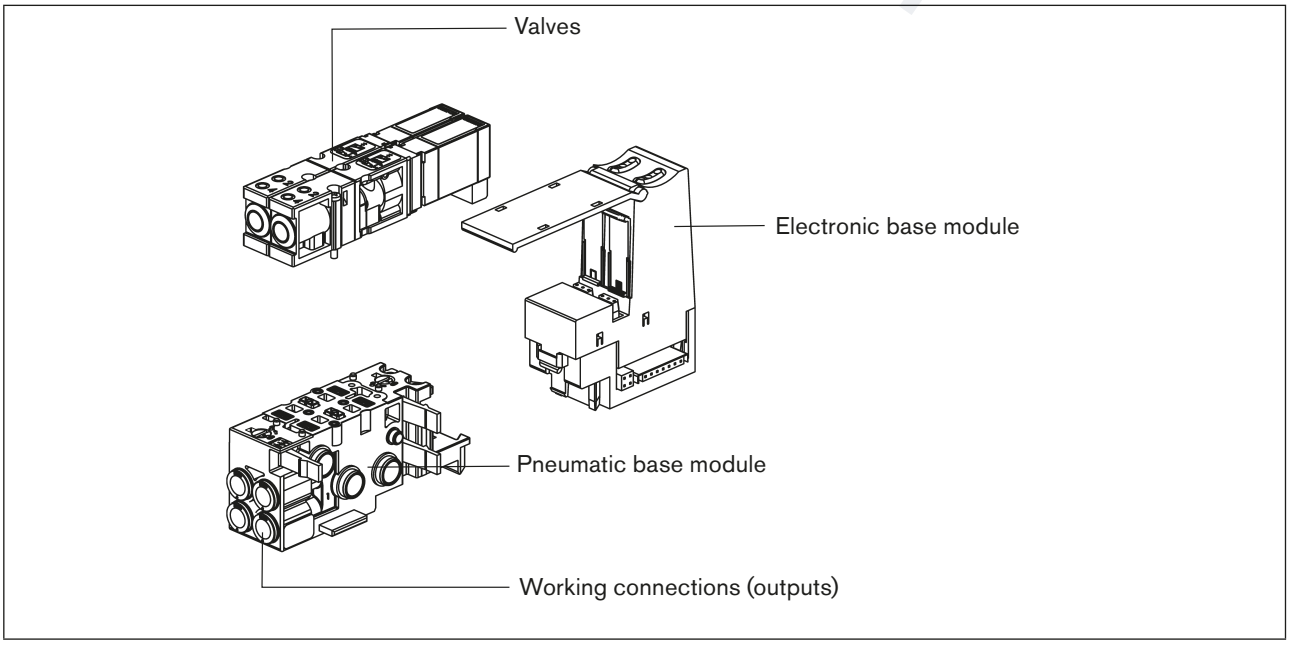

Figure 8: Modular design of the valve discs

MAN 1000010121 EN Version: R Status: RL (released | freigegeben) printed: 10.10.2026

valvesgo.com

On the electronic base module the digital outputs are switched where the valves are located. Depending on the operating principle of the valve, these outputs switch the internal P channel to the working connections (outputs) of the pneumatic base modules.

NOTE!

- Do not change attached valves until AirLINE has been depressurized.
- If a P shut-off is used, the valves can also be changed under pressure.

Variants

Thanks to the modular design of the valve disc, there are several variants:

Types Pneumatic/electronic	MP11 / ME02	MP12 / ME03
Add-on dimension	11 mm	16.5 mm
Valve types	6524 6524 (2x3/2-way) 6525 0460	6526 6527 0461
Number of valve locations on electronic base module	2-fold 4-fold	2-fold 3-fold* 4-fold
Number of valve locations on pneumatic base module	2-fold 8-fold	2-fold 3-fold* 4-fold
Connection version (Pneumatic base module)	D6 D4 D1/4" M5 M7	D8 G1/8" NPT 1/8"
		D4** D1/4** D6** M5** M7**
Non-return valves (optional)	without non-return valve non-return valve in R channel non-return valve in R+S channel	
P shut-off (optional)	with P shut-off***	not available

* Overall width of electronic/pneumatic base module = 33 mm, with 3 slots for 10 mm valves
** Special design 3-fold, 10 mm valves 6524 / 6525
*** Available for certain valve types and with function restriction only. See also "6.3. Technical Data of the valve block" and "7.4. Pneumatic base module"

MAN 1000010121 EN Version: R Status: RL (released | freigegeben) printed: 10.10.2026

valvesgo.com

7.2. Connection modules

7.2.1. Structure of the connection module

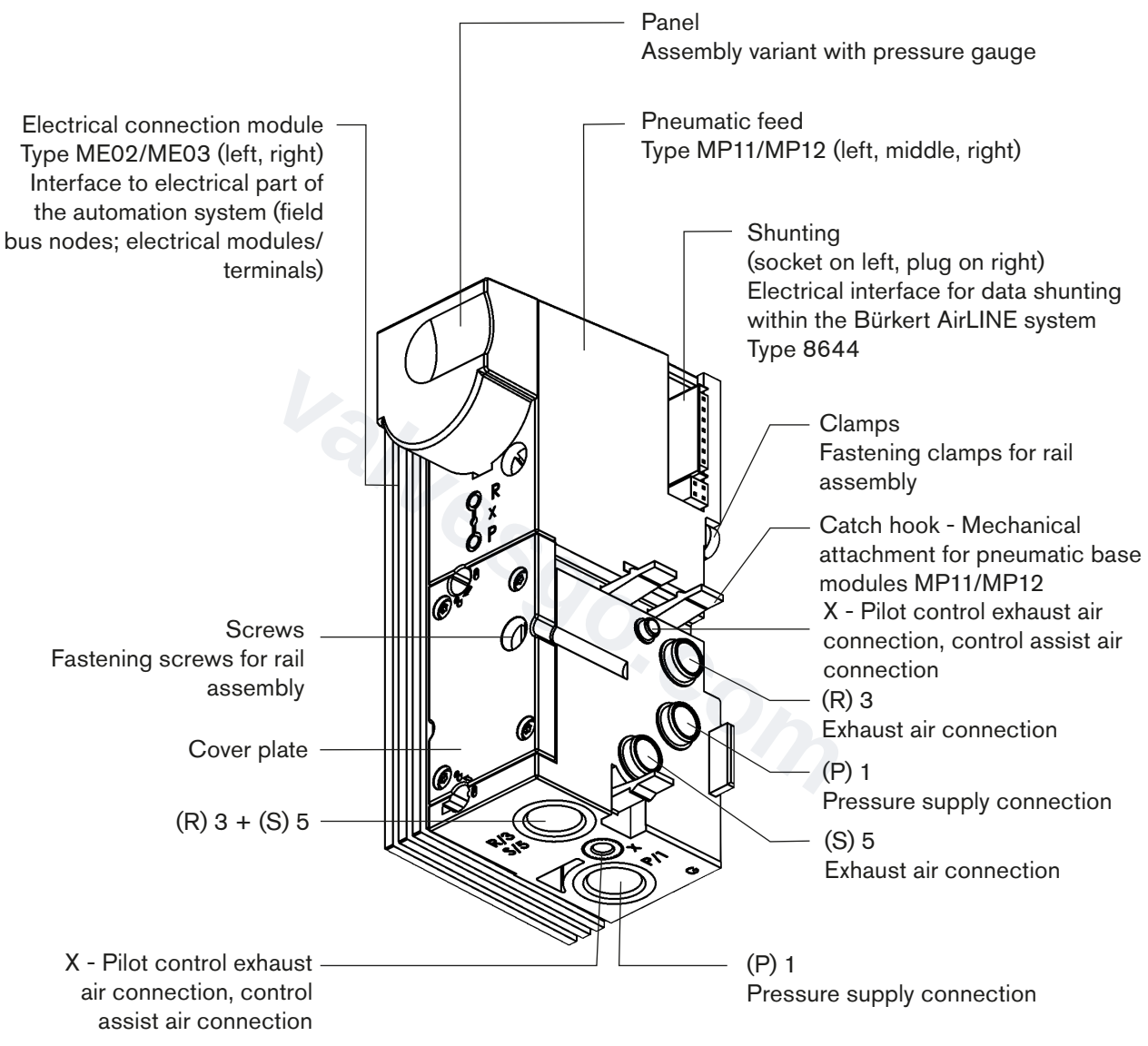

Figure 9: Structure of the connection module

The connector strip situated under a shielding plate near the pneumatic connection modules is guided by a protective plastic collar. Placing these modules in rows and connecting them together ensure that this shielding plate and the plug pins are not damaged or bent.

MAN 1000010121 EN Version: R Status: RL (released | freigegeben) printed: 10.10.2026

valvesgo.com

Variants

The feeds were designed in different variants to meet diverse requirements. To facilitate start-up and diagnosis, feeds are available with a pressure gauge. You receive the fluid connections with straight or conical screw connections as well as with quick-connect systems.

The fluid connections can be used differently for special functions. For example the vent connection for the pilot valve can be used as a connection for the control assist air, and different pressures can be applied for supplying and controlling the valve.

The feeds differ e.g. by:

- Pressure gauge
- Connection version

MP11	MP12
G 1/4"	G 3/8"
D10	NPT 3/8"
NPT 1/4"	-

- Control assist air yes / no

valvesgo.com

MAN 1000010121 EN Version: R Status: RL (released | freigegeben) printed: 10.10.2026

7.2.2. Connection modules, pneumatic - on left Type ME02

Variant drawing

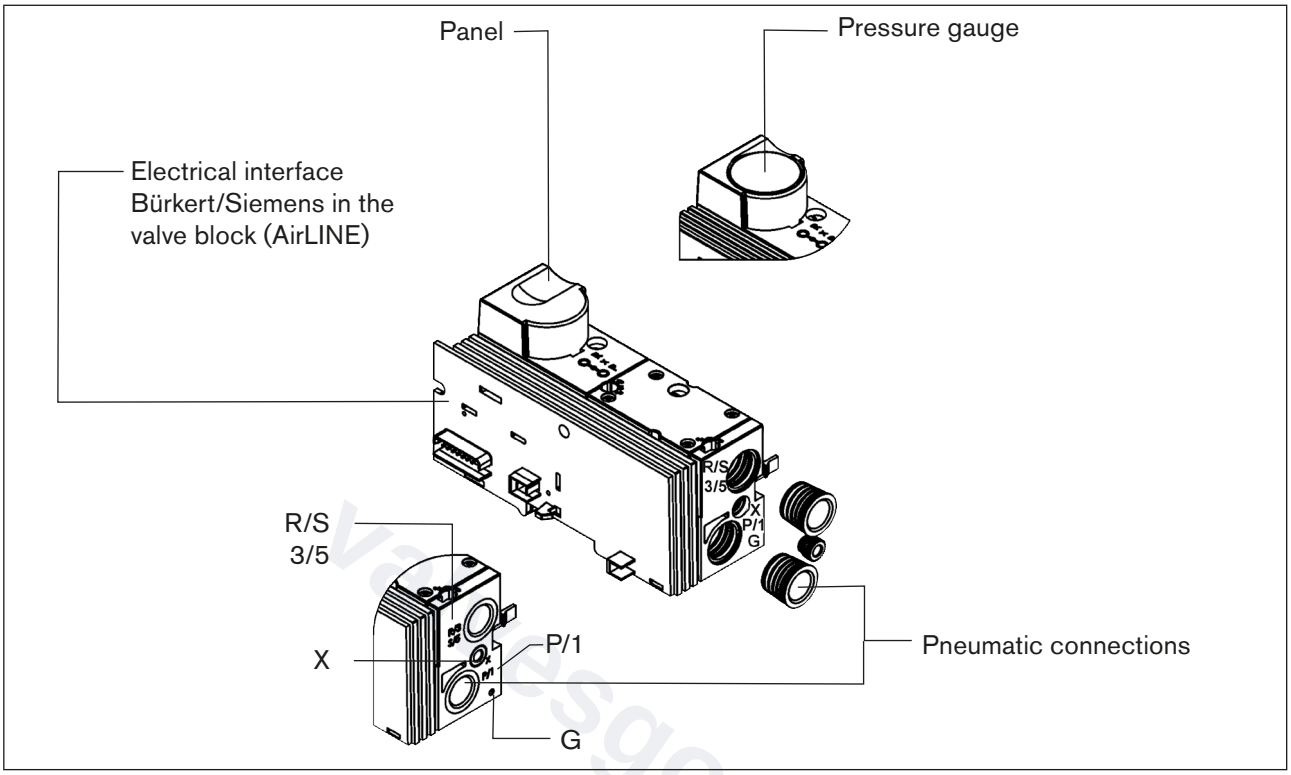

Figure 10: Side feed on left

Variants

Supply connection (P) 1	Connection X	Exhaust air connection (R/S) 3/5
G 1/4	M5	G 1/4
D10	D4	D10
NPT 1/4	M5	NPT 1/4

- Version available with and without pressure gauge

Connection X

Operation	Configuration of X
Standard	Exhaust air pilot valve
Control assist air	Connection for control assist air (Operation with control assist air is optional)

MAN 1000010121 EN Version: R Status: RL (released | freigegeben) printed: 10.10.2026

valvesgo.com

7.2.3. Connection modules, pneumatic - in middle Type ME02

Variant drawing

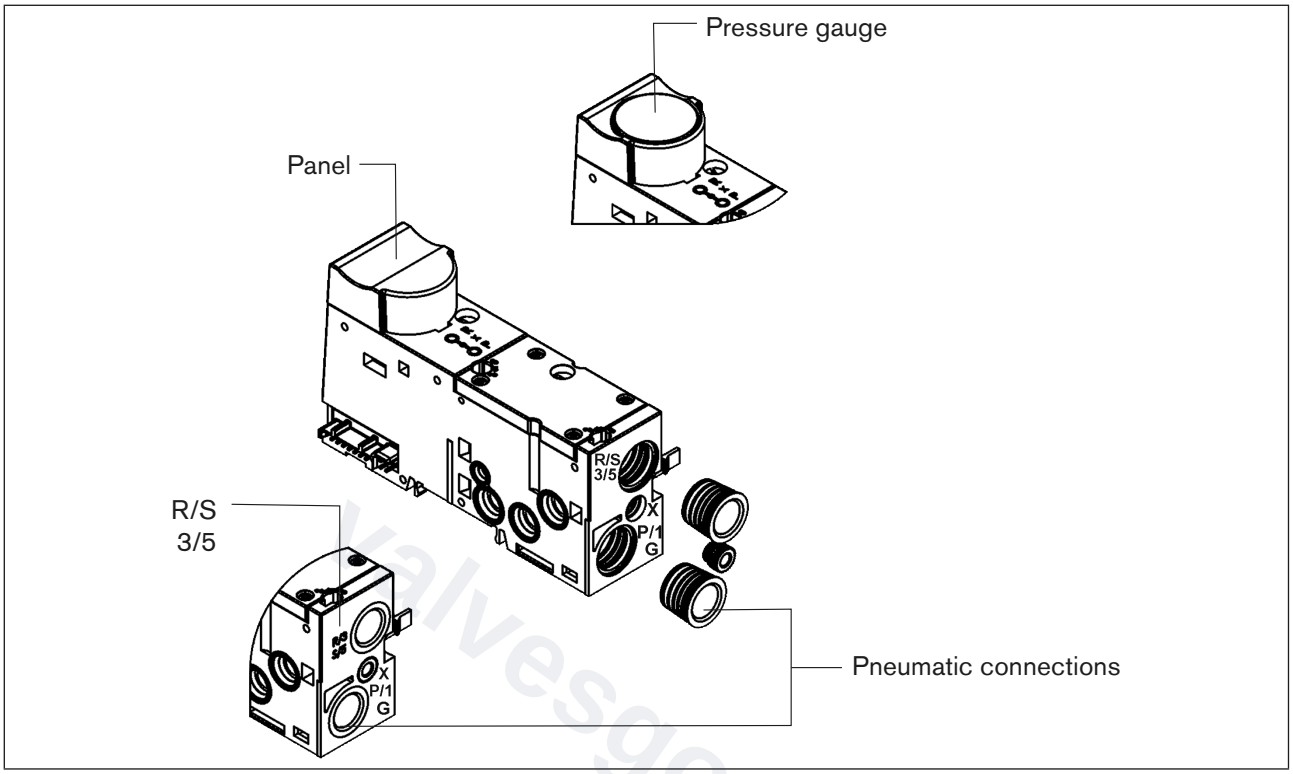

Figure 11: Intermediate feed

Variants

Supply connection (P) 1	Connection X	Exhaust air connection (R/S) 3/5
G 1/4	M5	G 1/4
D10	D4	D10
NPT 1/4	M5	NPT 1/4

- Version available with and without pressure gauge

Connection X

Operation	Configuration of X
Standard	Exhaust air pilot valve
Control assist air	Connection for control assist air (Operation with control assist air is optional)

MAN 1000010121 EN Version: R Status: RL (released | freigegeben) printed: 10.10.2026

valvesgo.com

7.2.4. Connection modules, pneumatic - on right Type ME02

Variant drawing

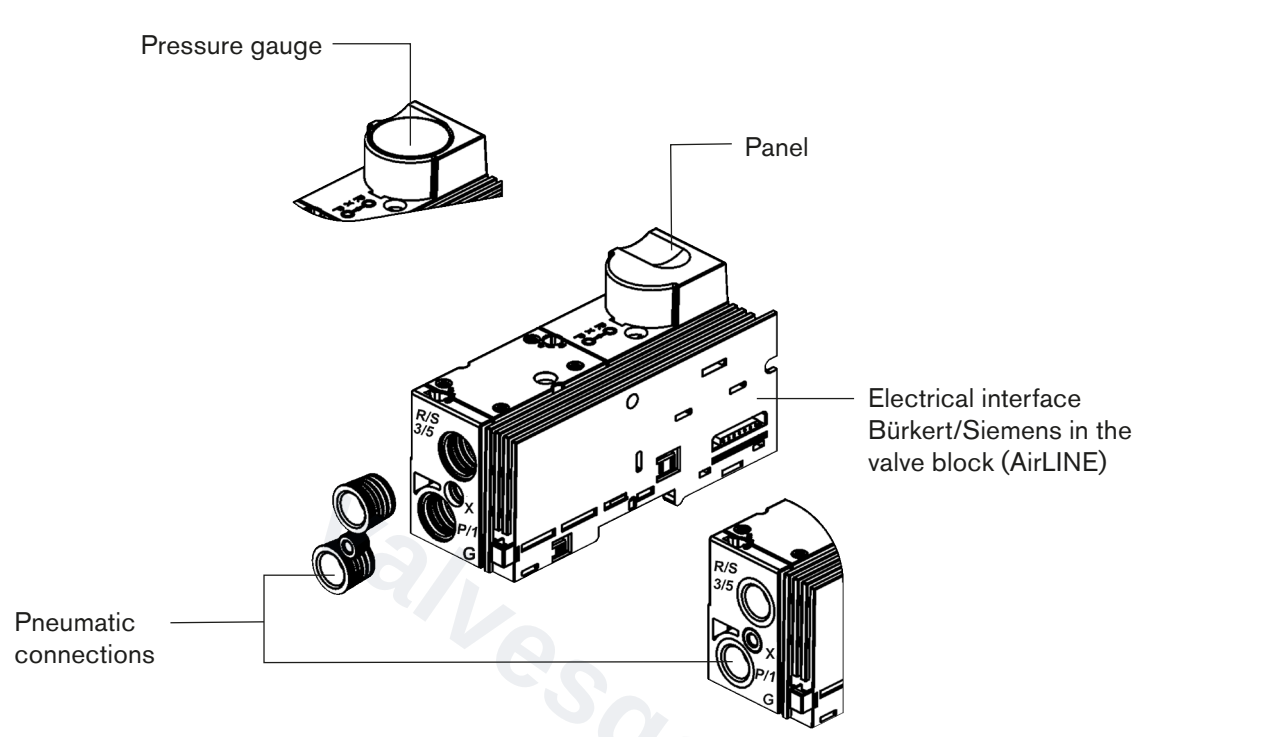

Figure 12: Side feed on right

Variants

Supply connection (P) 1	Connection X	Exhaust air connection (R/S) 3/5
G 1/4	M5	G 1/4
D10	D4	D10
NPT 1/4	M5	NPT 1/4

- Version available with and without pressure gauge

Connection X

Operation	Configuration of X
Standard	Exhaust air pilot valve
Control assist air	Connection for control assist air (Operation with control assist air is optional)

MAN 1000010121 EN Version: R Status: RL (released | freigegeben) printed: 10.10.2026

valvesgo.com

7.2.5. Connection modules, pneumatic - on left Type ME03

Variant drawing

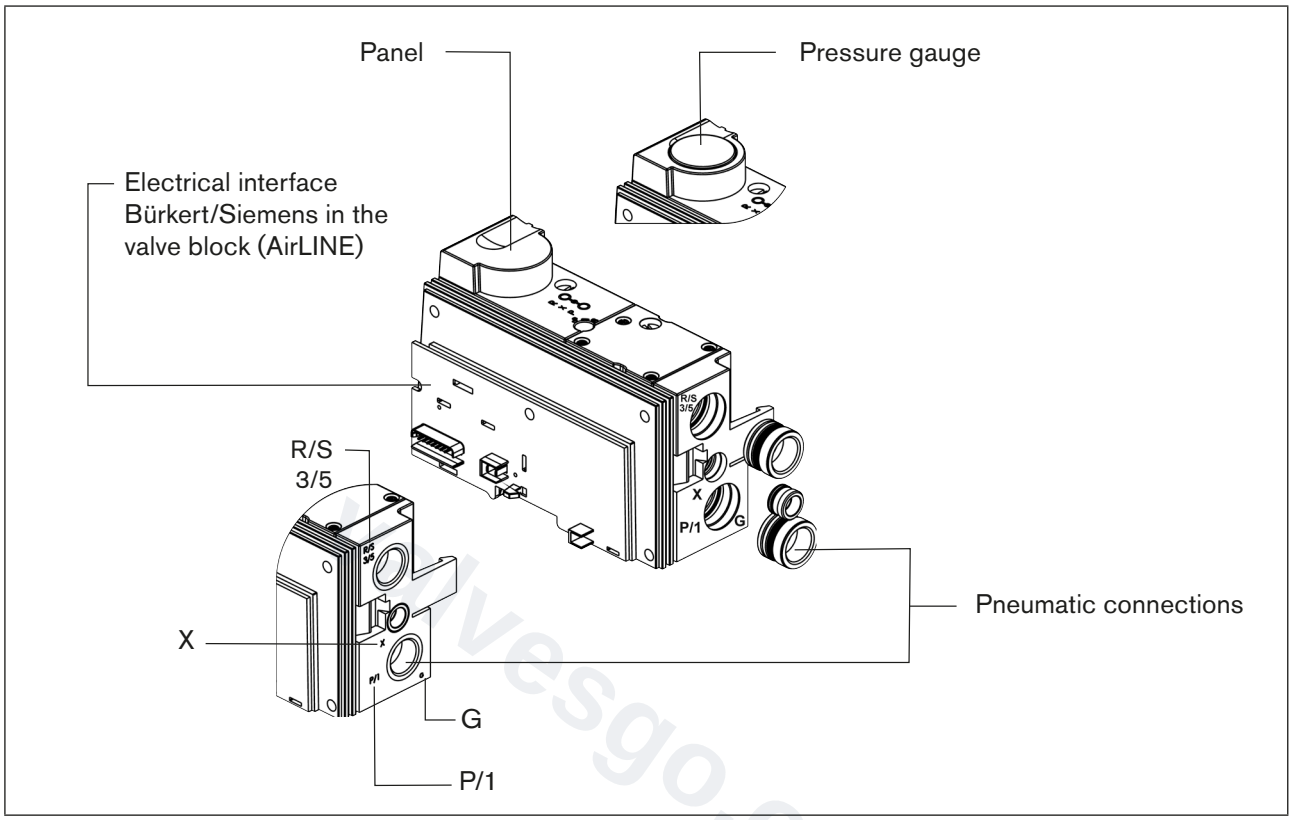

Figure 13: Side feed on left

Variants

Supply connection (P) 1	Connection X	Exhaust air connection (R/S) 3/5
G 3/8	G 1/8	G 3/8
NPT 3/8	NPT 1/8	NPT 3/8

- Version available with and without pressure gauge

Connection X

Operation	Configuration of X
Standard	Exhaust air pilot valve
Control assist air	Connection for control assist air (Operation with control assist air is optional)

MAN 1000010121 EN Version: R Status: RL (released | freigegeben) printed: 10.10.2026

valvesgo.com

7.2.6. Connection modules, pneumatic - in middle Type ME03

Variant drawing

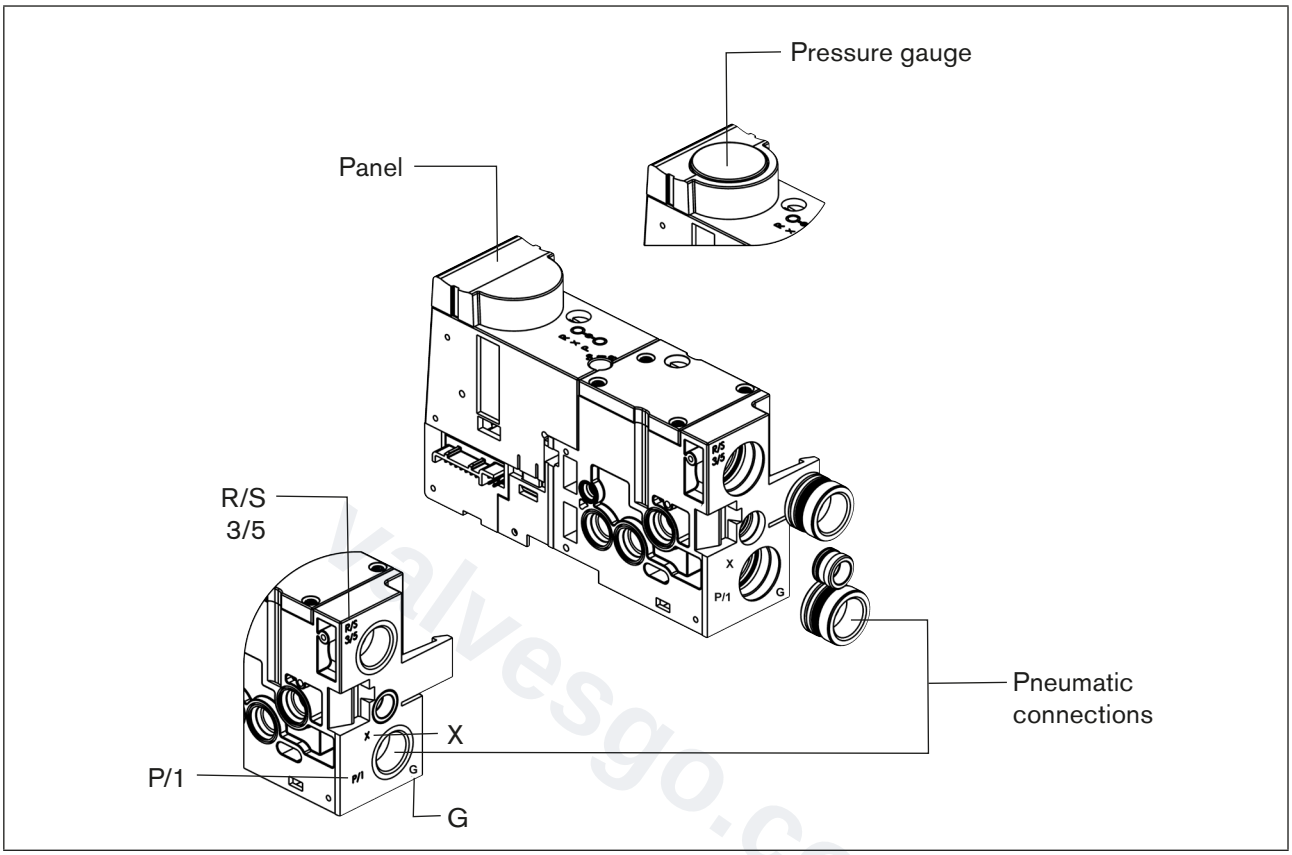

Figure 14: Intermediate feed

Variants

Supply connection (P) 1	Connection X	Exhaust air connection (R/S) 3/5
G 3/8	G 1/8	G 3/8
NPT 3/8	NPT 1/8	NPT 3/8

- Version available with and without pressure gauge

Connection X

Operation	Configuration of X
Standard	Exhaust air pilot valve
Control assist air	Connection for control assist air (Operation with control assist air is optional)

MAN 1000010121 EN Version: R Status: RL (released | freigegeben) printed: 10.10.2026

valvesgo.com

7.2.7. Connection modules, pneumatic - on right Type ME03

Variant drawing

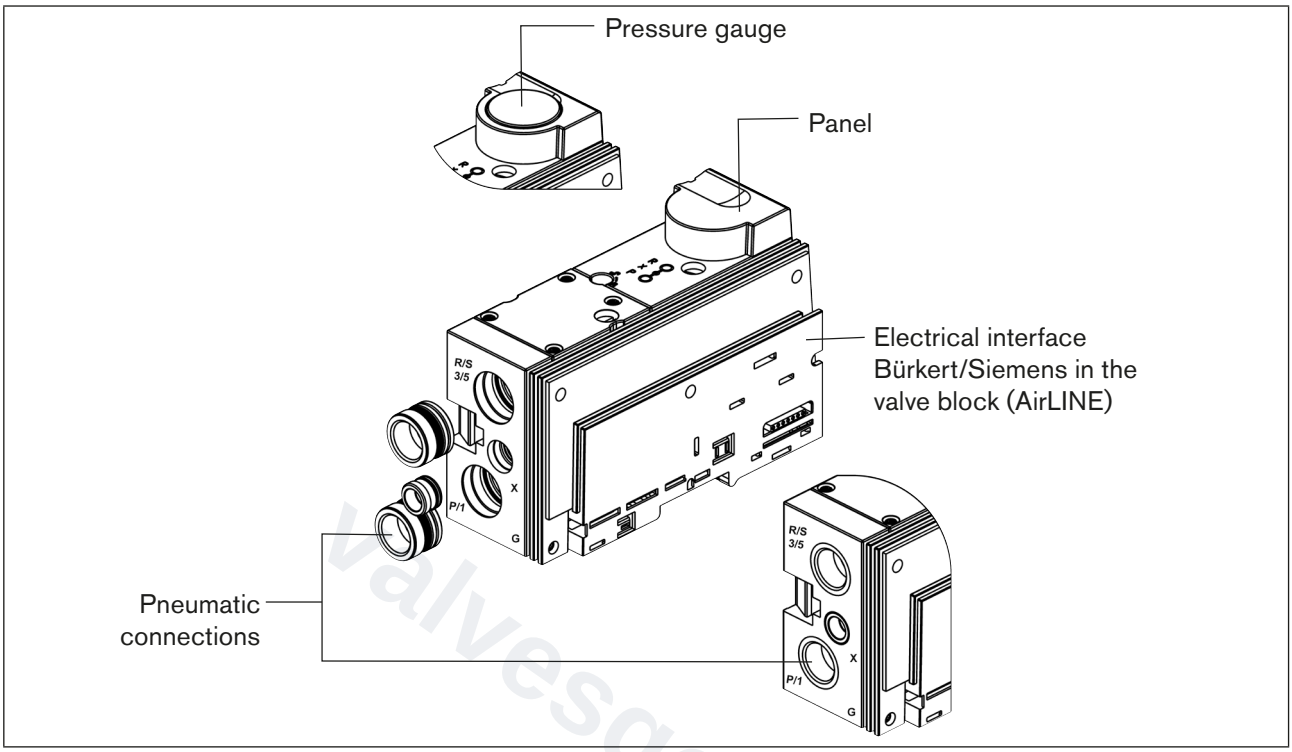

Figure 15: Side feed on right

Variants

Supply connection (P) 1	Connection X	Exhaust air connection (R/S) 3/5
G 3/8	G 1/8	G 3/8
NPT 3/8	NPT 1/8	NPT 3/8

- Version available with and without pressure gauge

Connection X

Operation	Configuration of X
Standard	Exhaust air pilot valve
Control assist air	Connection for control assist air (Operation with control assist air is optional)

MAN 1000010121 EN Version: R Status: RL (released | freigegeben) printed: 10.10.2026

valvesgo.com

7.3. Electronic base module

7.3.1. General Description

The electronic base module is connected to the adjacent modules via its electrical interface. In this way it receives both the power supply and the control signals for the valves on the slots. The electronic base modules and therefore the valve discs can be controlled as digital output modules / terminals. For detailed information see Chapter "10. Start-Up".

Variants

The valves used for AirLINE Type 8644 have different wiring diagrams, valve dimensions and control properties. Accordingly the electronic base modules exist in different versions.

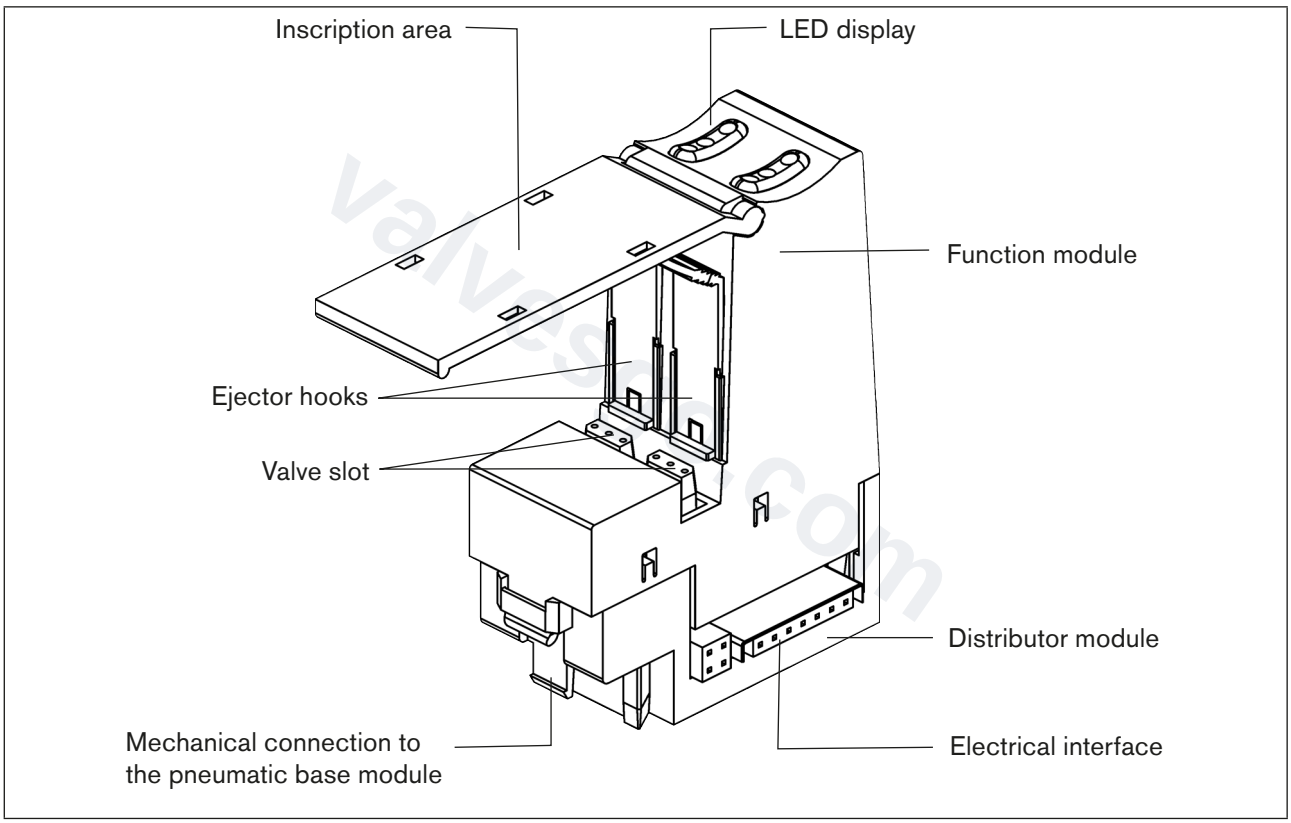

Figure 16: Example of an electronic base module (Type ME02 / 2-fold)

Available variants

Variants	2-fold monostable	2-fold bistable	3-fold 10 mm monostable	4-fold monostable	2-fold 2 x monostable
ME02	X	X	-	X	X
ME03	X	X	X	X	-

MAN 1000010121 EN Version: R Status: RL (released | freigegeben) printed: 10.10.2026

valvesgo.com

Combination options (electronic base module / valve)

Base module type		Add-on dimension	Valve locations	Valve type	Operating principle
ME02	2-fold monostable	11 mm	2	6524	3/2-way
				6525	5/2-way
	2-fold bistable	11 mm	2	0460	5/3-way
					5/2-way impulse
	2-fold 2 x monostable	11 mm	2	6524	2 x 3/2-way
	4-fold monostable	11 mm	4	6524	3/2-way
				6525	5/2-way
ME03	2-fold monostable	16.5 mm	2	6526	3/2-way
				6527	5/2-way
	2-fold bistable	16.5 mm	2	0461	5/3-way
					5/2-way impulse
	3-fold 10 mm monostable*	11 mm	3	6524	3/2-way
				6525	5/2-way
	4-fold monostable	16.5 mm	4	6526	3/2-way
				6527	5/2-way

* with 10 mm valves

The connector strip situated under a shielding plate near the electronic base modules is guided by a protective plastic collar. Placing these modules in rows and connecting them together ensure that this shielding plate and the plug pins are not damaged or bent.

valvesgo.com

MAN 1000010121 EN Version: R Status: RL (released | freigegeben) printed: 10.10.2026

7.3.2. Electronic base module ME02 / 2-fold monostable

Structure

An electrical base module consists of a distributor module (backplane bus) and a function module. Both modules are contacted via a 14-pole board-to-board plug. The bus signals on the distributor module are protected from interference by a shield support.

Combination options with valve types

Base module type	Add-on dimension	Valve locations	Valve type	Operating principle
ME02 2-fold monostable	11 mm	2	6524	3/2-way
			6525	5/2-way

The function module can be disconnected and connected during operation the same as the electronic modules of the ET200S. If several modules are replaced, the modules must be disconnected and reconnected in succession (5-23 ET200S EWA4NEB 780602401-06). To ensure the switching process, 24 V is applied briefly to the valve when connected. The power on the valve is reduced to one quarter after approx. 120 ms.

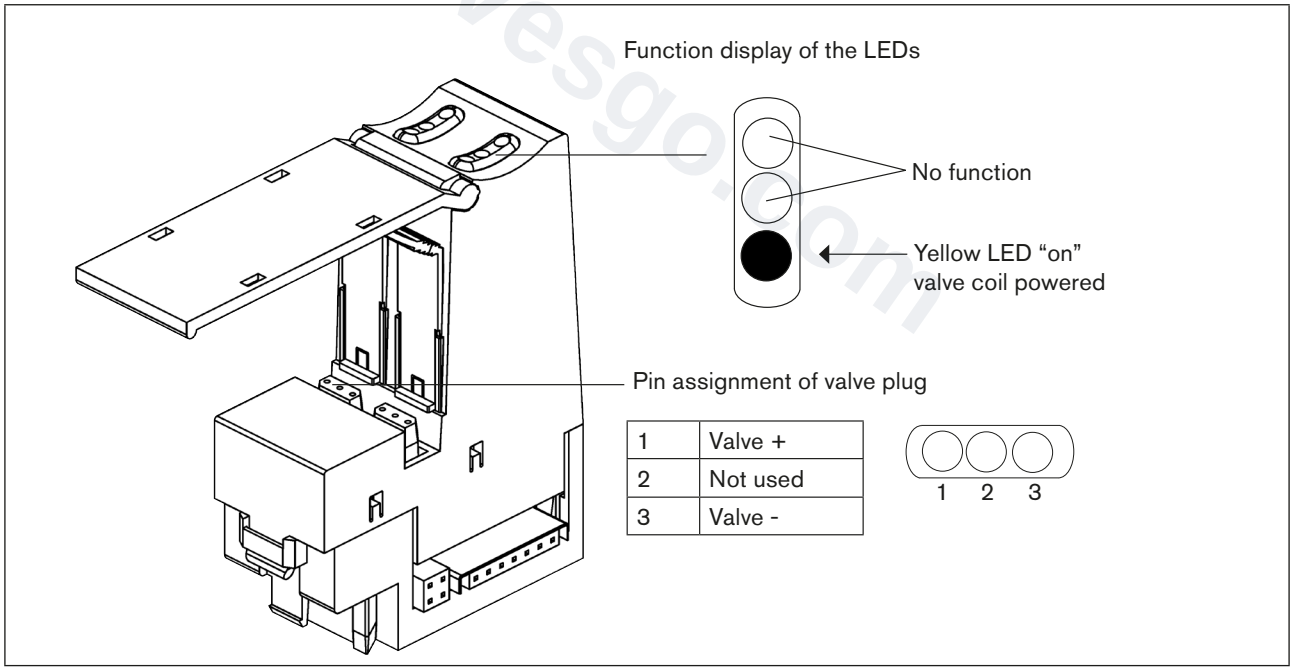

Figure 17: Electronic base module ME02 / 2-fold monostable

MAN 1000010121 EN Version: R Status: RL (released | freigegeben) printed: 10.10.2026

valvesgo.com

7.3.3. Electronic base module ME02 / 4-fold monostable

Structure

An electrical base module consists of a distributor module (backplane bus) and a function module. Both modules are contacted via a 14-pole board-to-board plug. The bus signals on the distributor module are protected from interference by a shield support.

Combination options with valve types

Base module type	Add-on dimension	Valve locations	Valve type	Operating principle
ME02 4-fold monostable	11 mm	4	6524	3/2-way
			6525	5/2-way

The function module can be disconnected and connected during operation the same as the electronic modules of the ET200S. If several modules are replaced, the modules must be disconnected and reconnected in succession (5-23 ET200S EWA4NEB 780602401-06). To ensure the switching process, 24 V is applied briefly to the valve when connected. The power on the valve is reduced to one quarter after approx. 120 ms.

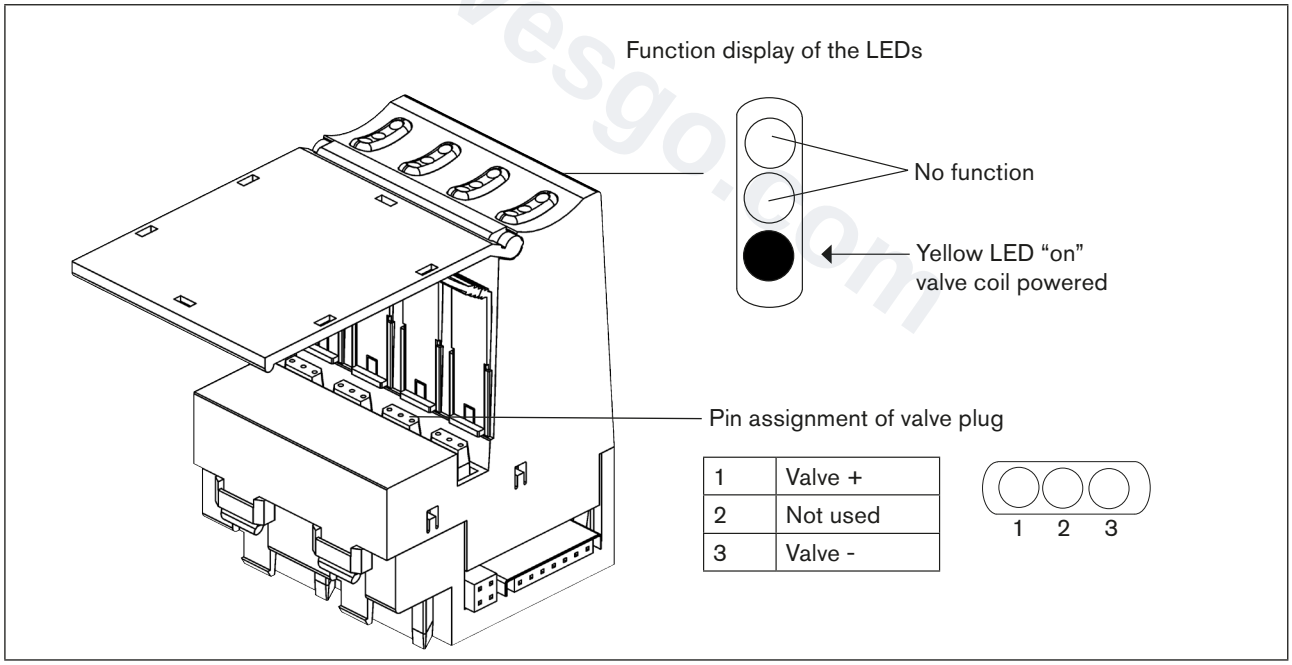

Figure 18: Electronic base module ME02 / 4-fold monostable

MAN 1000010121 EN Version: R Status: RL (released | freigegeben) printed: 10.10.2026

7.3.4. Electronic base module ME02 / 2-fold bistable

Structure

An electrical base module consists of a distributor module (backplane bus) and a function module. Both modules are contacted via a 14-pole board-to-board plug. The bus signals on the distributor module are protected from interference by a shield support.

Combination options with valve types

Base module type	Add-on dimension	Valve locations	Valve type	Operating principle
ME02 2-fold bistable	11 mm	2	0460	5/3-way
				5/2-way impulse

The function module can be disconnected and connected during operation the same as the electronic modules of the ET200S. If several modules are replaced, the modules must be disconnected and reconnected in succession (5-23 ET200S EWA4NEB 780602401-06). 24 V are applied to the valve.

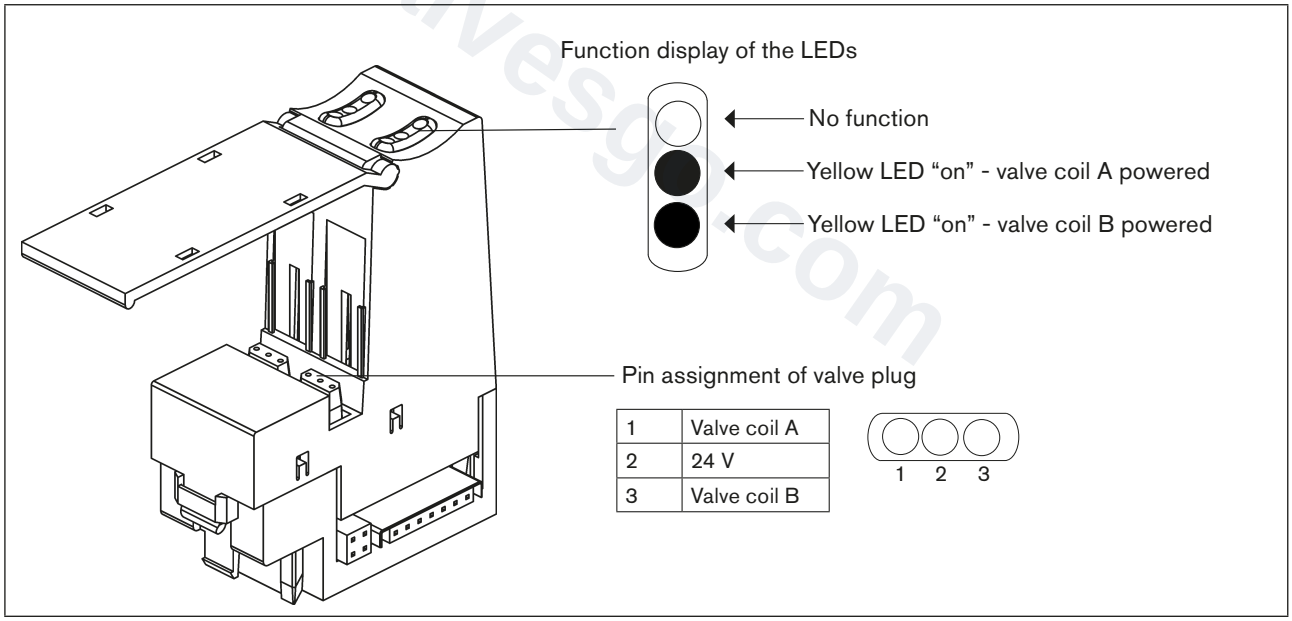

Figure 19: Electronic base module ME02 / 2-fold bistable

MAN 1000010121 EN Version: R Status: RL (released | freigegeben) printed: 10.10.2026

7.3.5. Electronic base module ME02 / 2-fold 2 x monostable

Structure

An electrical base module consists of a distributor module (backplane bus) and a function module. Both modules are contacted via a 14-pole board-to-board plug. The bus signals on the distributor module are protected from interference by a shield support.

Combination options with valve types

Base module type	Add-on dimension	Valve locations	Valve type	Operating principle
ME02 2-fold 2 x monostable	11 mm	2	6524	2 x 3/2-way

The function module can be disconnected and connected during operation the same as the electronic modules of the ET200S. If several modules are replaced, the modules must be disconnected and reconnected in succession (5-23 ET200S EWA4NEB 780602401-06). 24 V are applied to the valve.

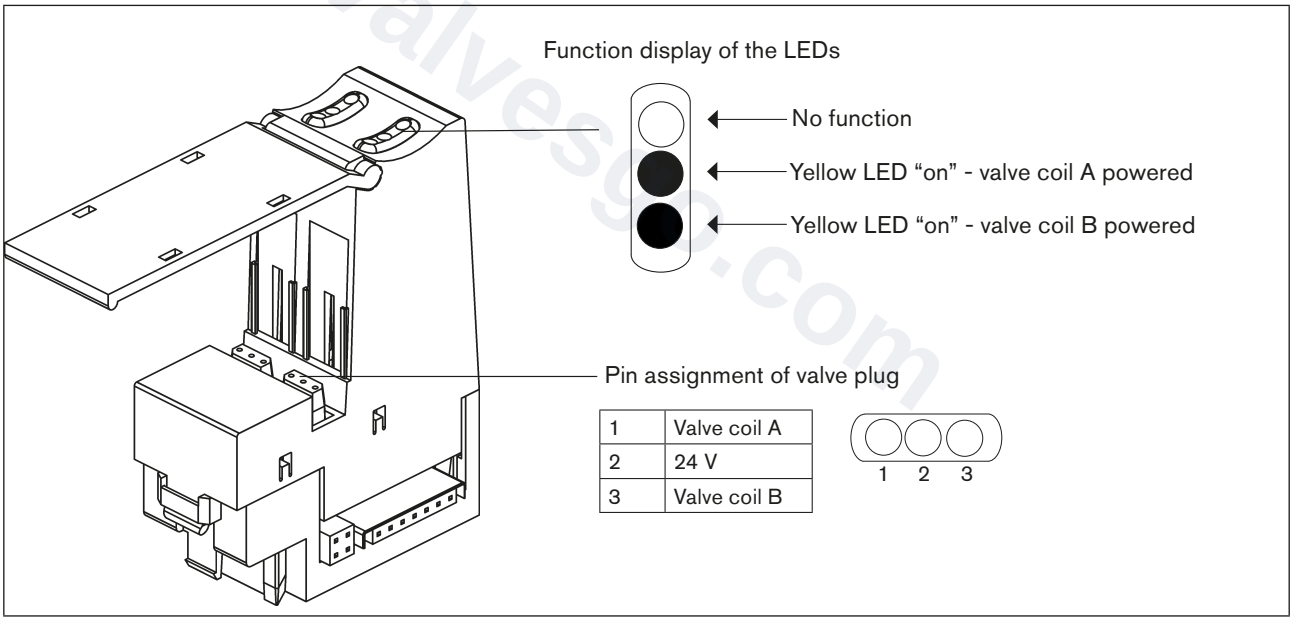

Figure 20: Electronic base module ME02 / 2-fold 2 x monostable

MAN 1000010121 EN Version: R Status: RL (released | freigegeben) printed: 10.10.2026

valvesgo.com

7.3.6. Electronic base module ME03 / 2-fold monostable

Structure

An electrical base module consists of a distributor module (backplane bus) and a function module. Both modules are contacted via a 14-pole board-to-board plug. The bus signals on the distributor module are protected from interference by a shield support.

Combination options with valve types

Base module type	Add-on dimension	Valve locations	Valve type	Operating principle
ME03 2-fold monostable	16.5 mm	2	6526	3/2-way
			6527	5/2-way

The function module can be disconnected and connected during operation the same as the electronic modules of the ET200S. If several modules are replaced, the modules must be disconnected and reconnected in succession (5-23 ET200S EWA4NEB 780602401-06). To ensure the switching process, 24 V is applied briefly to the valve when connected. The power on the valve is reduced to one quarter after approx. 400 ms.

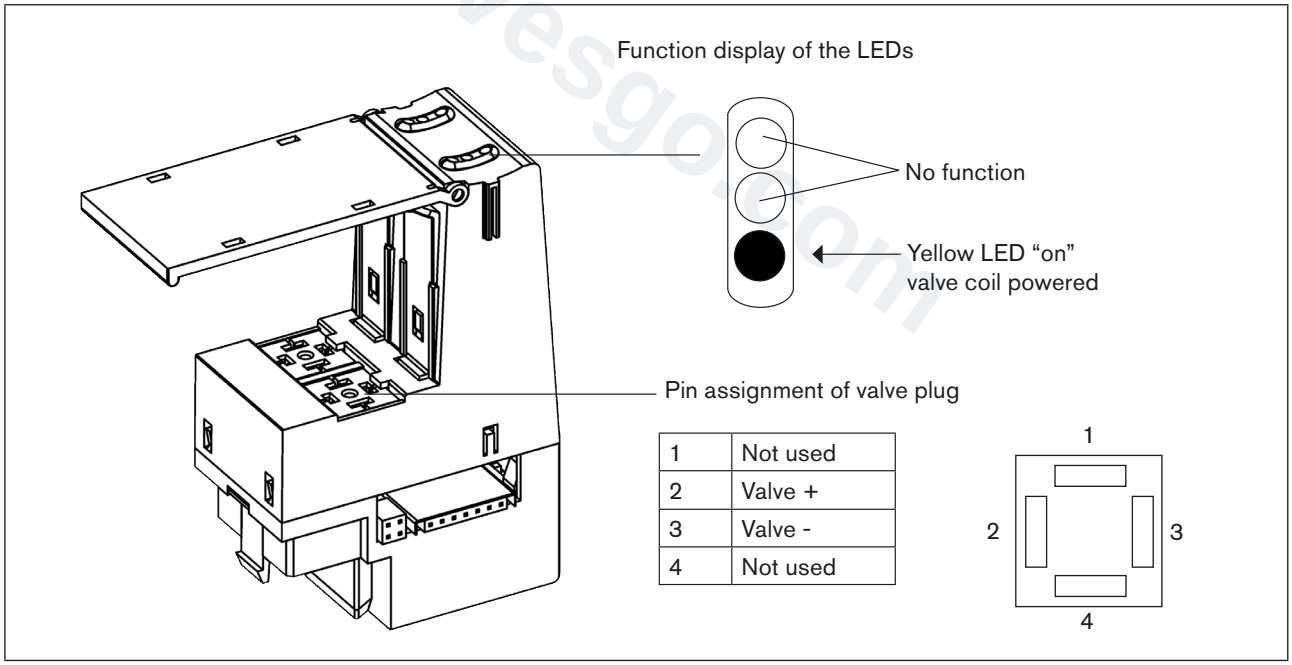

Figure 21: Electronic base module ME03 / 2-fold monostable

MAN 1000010121 EN Version: R Status: RL (released | freigegeben) printed: 10.10.2026

7.3.7. Electronic base module ME03 / 4-fold monostable

Structure

An electrical base module consists of a distributor module (backplane bus) and a function module. Both modules are contacted via a 14-pole board-to-board plug. The bus signals on the distributor module are protected from interference by a shield support.

Combination options with valve types

Base module type	Add-on dimension	Valve locations	Valve type	Operating principle
ME03 4-fold monostable	16.5 mm	4	6526	3/2-way
			6527	5/2-way

The function module can be disconnected and connected during operation the same as the electronic modules of the ET200S. If several modules are replaced, the modules must be disconnected and reconnected in succession (5-23 ET200S EWA4NEB 780602401-06). To ensure the switching process, 24 V is applied briefly to the valve when connected. The power on the valve is reduced to one quarter after approx. 400 ms.

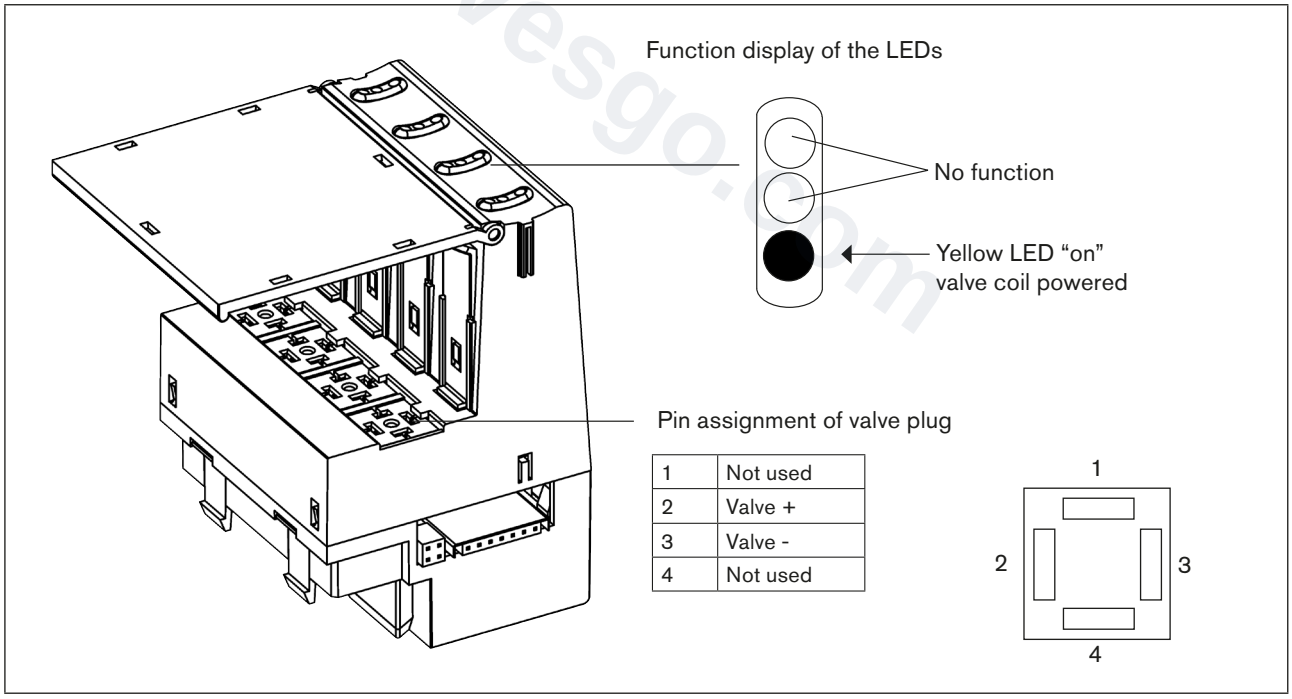

Figure 22: Electronic base module ME03 / 4-fold monostable

MAN 1000010121 EN Version: R Status: RL (released | freigegeben) printed: 10.10.2026

valvesgo.com

7.3.8. Electronic base module ME03 / 3-fold 10 mm monostable

Structure

An electrical base module consists of a distributor module (backplane bus) and a function module. Both modules are contacted via a 14-pole board-to-board plug. The bus signals on the distributor module are protected from interference by a shield support.

Combination options with valve types

Base module type	Add-on dimension	Valve locations	Valve type	Operating principle
ME03 3-fold 10 mm monostable	11 mm	3	6524	3/2-way
			6525	5/2-way

The function module can be disconnected and connected during operation the same as the electronic modules of the ET200S. If several modules are replaced, the modules must be disconnected and reconnected in succession (5-23 ET200S EWA4NEB 780602401-06). To ensure the switching process, 24 V is applied briefly to the valve when connected. The power on the valve is reduced to one quarter after approx. 120 ms.

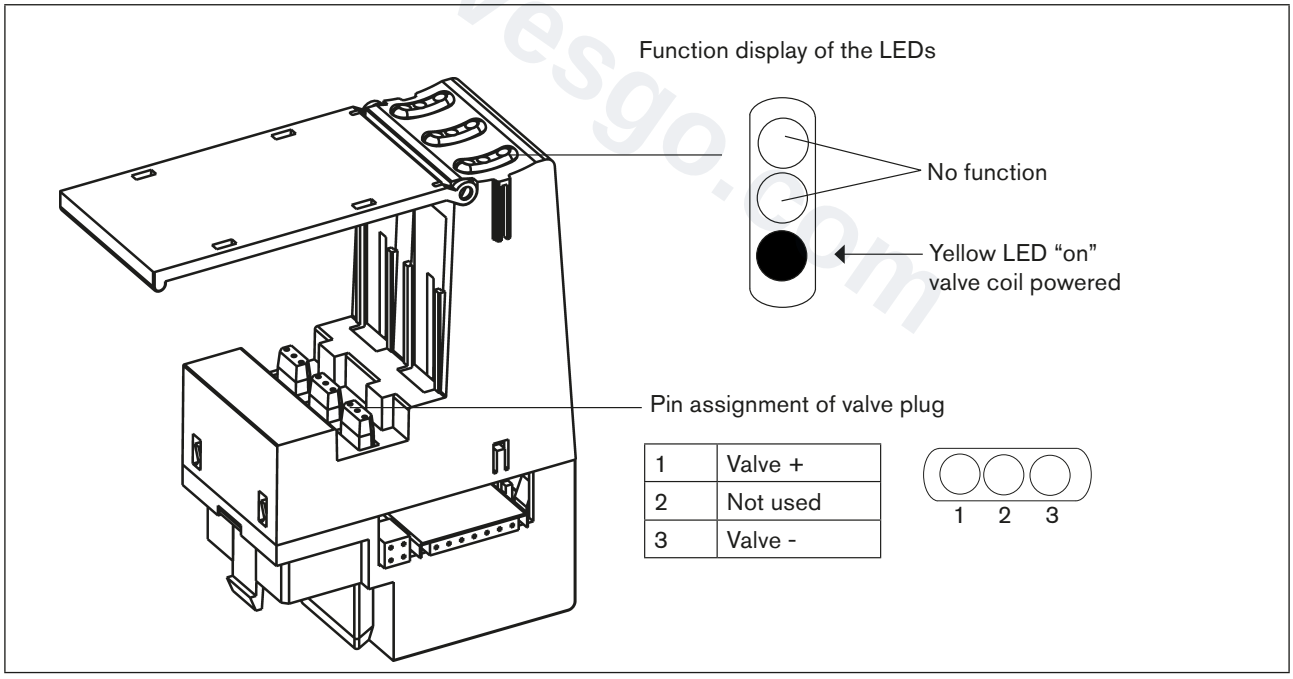

Figure 23: Electronic base module ME03 / 3-fold with 10 mm monostable

MAN 1000010121 EN Version: R Status: RL (released | freigegeben) printed: 10.10.2026

valvesgo.com

7.3.9. Electronic base module ME03 / 2-fold bistable

Structure

An electrical base module consists of a distributor module (backplane bus) and a function module. Both modules are contacted via a 14-pole board-to-board plug. The bus signals on the distributor module are protected from interference by a shield support.

Combination options with valve types

Base module type	Add-on dimension	Valve locations	Valve type	Operating principle
ME03 2-fold bistable	16.5 mm	2	0461	5/3-way
				5/2-way impulse

The function module can be disconnected and connected during operation the same as the electronic modules of the ET200S. If several modules are replaced, the modules must be disconnected and reconnected in succession (5-23 ET200S EWA4NEB 780602401-06). 24 V are applied to the valve.

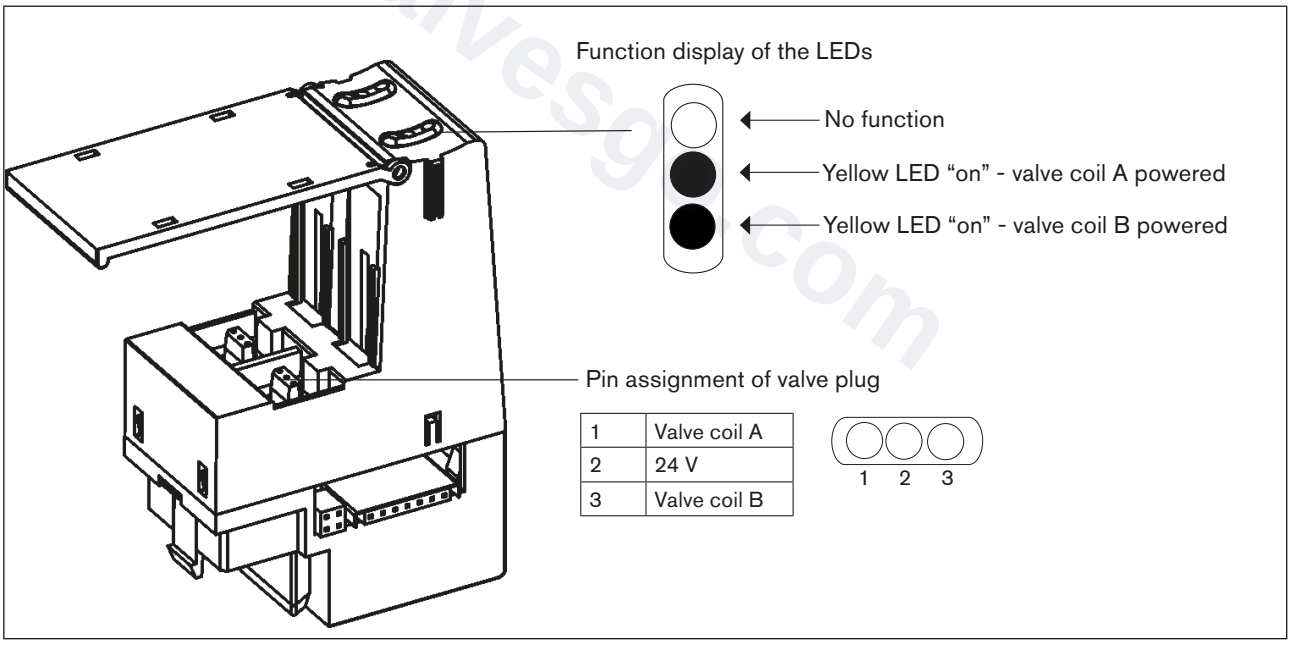

Figure 24: Electronic base module ME03 / 2-fold bistable

MAN 1000010121 EN Version: R Status: RL (released | freigegeben) printed: 10.10.2026

valvesgo.com

7.4. Pneumatic base module

7.4.1. General Description

The pneumatic base module features the working connections for the following applications. Several modules can be placed in rows by connecting them. The seal on the outside is retained. The P-connection can be sealed by using a bulkhead. This allows movement in one valve block with different operating pressures.

Variants

The variant versions differ in add-on dimension, number of valve locations, wiring diagram of the valves, version of the working connections and optional use of non-return valves Not all conceivable variants have been implemented.

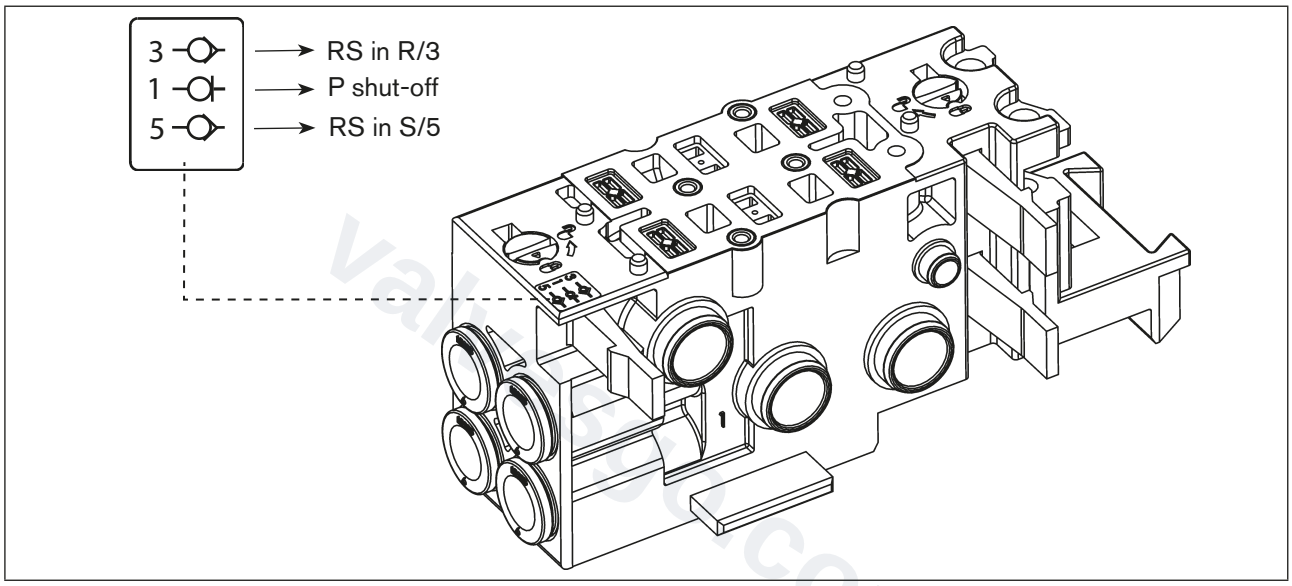

Figure 25: Example of a pneumatic base module (Type ME11 / 2-fold)

Add-on dimension

Larger valves also require wider base modules. This allows a higher flow rate to be implemented. Currently the following add-on dimensions are available:

Variants	Add-on dimension mm	2-fold mono	2-fold 2 x mono	2-fold bistable	3-fold 10 mm mono	4-fold mono	8-fold mono
MP11	11	X*	X	X	-	-	X*
MP12	16.5	X	-	X	X	X	-

* Also with P shut-off

Number of valve locations per module

As module optimization is based on low granularity, cost savings, structure of valve discs and utilization of the electronics, it is useful to have modules with a varying number of valve locations.

Type of working connections

Whether quick plug-in connections or thread - you as the customer decide which is the optimum variant for you.

MAN 1000010121 EN Version: R Status: RL (released | freigegeben) printed: 10.10.2026

valvesgo.com

Non-return valve for the vent connections

As certain applications require a functionality with non-return valves, there are also appropriate types for this purpose:

- Without non-return valve,
- Non-return valve in R,
- Non-return valve in R+S,
- An integrated P shut-off is also available for the modules MP11 (2-fold mono and 8-fold mono).

MP11	MP12
D6	D8
D4	G 1/8"
D 1/4"	NPT 1/8"
M5	D6*
M7	M5*
-	M7*
-	D4*
-	D 1/4"*

* Special design 3-fold module with 10 mm valves

7.4.2. Pneumatic base module with integrated P shut-off

General Description

The P shut-off can be integrated in the module for the pneumatic base modules MP11, 2-fold and 8-fold versions. This option allows a defective valve to be changed under pressure without having to depressurize the complete valve cluster or system. When the valve is changed by a mechanism, the open cross section is reduced until only a slight residual leakage occurs.

Features and restrictions

If the P shut-off is used, there are some restrictions with respect to the operating data of the complete system:

→ The flow rate of the valves Type 6524 / 6525 is reduced to approx. 60%*.

→ The operating pressure range must be between 5 and 7 bar if the P shut-off is used, otherwise there may be problems with the P shut-off.

→ As the pressure supply for the pilot valves is not shut off if valves are used with external control assist air, the P shut-off can be used only in conjunction with the valves with internal control air within the restricted pressure range.

→ The P shut-off can be combined with the integrated non-return valves.

NOTE!

If using the P shut-off base modules, ensure that the pressure supply of the valve clusters is designed with a correspondingly large volume (minimum hose diameter 8/6 mm).

* Mean value from measurements

MAN 1000010121 EN Version: R Status: RL (released | freigegeben) printed: 10.10.2026

valvesgo.com

Procedure when replacing a valve

CAUTION!

- Only one valve may be removed at the same time.
- During removal, observe that only the P channel is shut off! This means that a pressure on the working outputs A or B is released when the valve is removed. This also means that a connected actuator is also depressurized and a movement may be triggered as a result.
- If there is a larger volume on the actuator side, attach a shut-off option for the working connections to prevent the actuator from moving.

When the valve is removed, a relatively large amount of air is initially blown into the open for functional reasons, as the P shut-off cannot close until the required pressure difference is reached. However, as the automatic shut-off reduces the exhaust air significantly, only a residual leakage remains when the P shut-off is closed.

→ When installing the valve, ensure that the seal is inserted correctly.

→ Install the valve at the tightening torques indicated in the operating instructions.

→ When installing the valve, ensure that the working connections are also pressurized in the corresponding rest position of the valve until it is switched over. The pressurization may cause a connected actuator to move.

→ Ensure that these movements of the actuator do not cause any damage or unwanted actions in the system.

Before changing the valve, we recommend bringing the system into an electrically safe basic state.

valvesgo.com

MAN 1000010121 EN Version: R Status: RL (released | freigegeben) printed: 10.10.2026

7.5. Valves

7.5.1. General Description

Automation systems are being used increasingly in all areas in which open and closed loop tasks are to be managed. The valves form the interface between electronics and pneumatics.

The valves consist of a pilot control solenoid valve and a pneumatic valve. Pilot valve and valve housing are clamped or bolted to each other. The active principle allows high pressures to be switched at low power consumption and short switching times.

The valves operate maintenance-free.

Ex license II 3 G Ex nA II T4 for Types 6524 / 6525 and Types 6526 / 6527

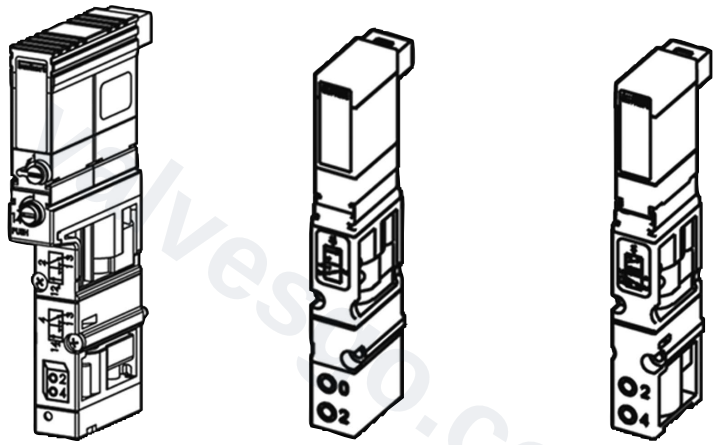

Figure 26: Example of a valve: Types: 6524 (2 x 3/2-way), 6524 and 6525

Variants

In the case of Air LINE Type 8644 valves can be integrated with the following operating principles:

Valves	Operating principle	Operation	Width	Type
3/2-way	C (NC)	Internal control air	10	6524
	D (NO)			
	C (NC)	Control assist air (External)		
	D (NO)			
	C - vacuum (NC)			
2 x 3/2-way	2 x C (NC)	Internal control air		
	2 x C (NC)	Control assist air (External)		

MAN 1000010121 EN Version: R Status: RL (released | freigegeben) printed: 10.10.2026

valvesgo.com

Valves	Operating principle	Operation	Width	Type
3/2-way	C (NC)	Internal control air	16	6526
	D (NO)			
	C (NC)	Control assist air (External)		
	D (NO)			
	C - vacuum (NC)			
5/2-way	H	Internal control air	10	6525
		Control assist air (External)		
		Internal control air	16	6527
		Control assist air (External)		
5/3-way	L Lock middle position	Internal control air	10	0460
	N Deaerated			
	L Lock middle position		16	0461
	N Deaerated			
5/2-way impulse	H	Internal control air	10	0460
			16	0461

NOTE!

Valves with control assist air

If valves are used with control assist air, the exhaust air escapes from the pilot valve into the environment. Valves with control assist air cannot be combined on the valve cluster with valves with internal control air, as the connection X (see Chapter "7.2. Connection modules") is used differently.

Valves 6524 and 6525 (Exception: Type 6524 2 x 3/2-way)

The assembly of the valve cluster Type 8644 with the valves 6524 and 6525 is authorized for use in Zone 2 in accordance with II 3 G Ex nA II T4 with the number PTB 02 ATEX 2048.

Restrictions for use in Zone 2

CAUTION!

For valve types 6526 and 6527 the valve switch-off time restriction $T_{OFF} \geq 0.2$ s must be observed for use in Zone 2 with temperature class T4 under the following conditions:

- at quick switch-on cycles (valve switch-on time $T_{ON} < 3$ s)
- maximum ambient temperature of +55° C
- maximum permitted overvoltage of $U_{Nominal}$ + 10 %

MAN 1000010121 EN Version: R Status: RL (released | freigegeben) printed: 10.10.2026

valvesgo.com

Valve switching time

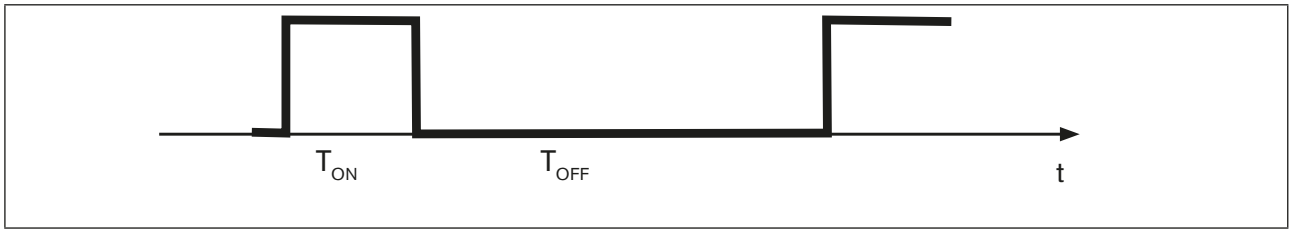

Figure 27: Valve switching time

If the valve is switched on for longer than 3 seconds, there are no restrictions for the duration until the valve is switched on again.

For exact specification see data sheet of the particular valves.

valvesgo.com

MAN 1000010121 EN Version: R Status: RL (released | freigegeben) printed: 10.10.2026

8. INSTALLATION

8.1. Safety instructions

DANGER!

Risk of injury from high pressure in the equipment!

- Before dismounting pneumatic lines and valves, turn off the pressure and vent the lines.

Risk of injury due to electrical shock!

- Before reaching into the device or the equipment, switch off the power supply and secure to prevent reactivation!
- Observe applicable accident prevention and safety regulations for electrical equipment! (Electronic modules and valves may also be replaced while the power supply is on)

WARNING!

Risk of injury from improper installation!

- Installation may be carried out by authorized technicians only and with the appropriate tools!

Risk of injury from unintentional activation of the system and an uncontrolled restart!

- Secure system from unintentional activation.
- Following installation, ensure a controlled restart.

CAUTION!

Escape of medium and malfunction!

If the seals are not seated correctly, leaks and malfunctions may occur due to pressure losses.

- Ensure that the seals are seated correctly in the area of the electronics and pneumatics.

Short-circuit, malfunction

The electrical connection requires exact contacting.

- Do not bend contacts.
- If connections are damaged or bent, replace the affected components.
- Do not switch on the system unless the components are in perfect condition.

NOTE!

Operate the system with direct current only!

To prevent damage to the system, use only direct current for the system power supply.

Prevent a pressure drop!

To prevent a pressure drop, design the system pressure supply with the largest possible volume.

MAN 1000010121 EN Version: R Status: RL (released | freigegeben) printed: 10.10.2026

valvesgo.com

8.2. Removing the valve block from the top-hat rail

DANGER!

Risk of electric shock!

- Before reaching into the device or the equipment, switch off the power supply and secure to prevent reactivation!
- Observe applicable accident prevention and safety regulations for electrical equipment!

The valve block of the AirLINE system Type 8644 is combined with the decentralized peripheral system ET200S from Siemens.

The valve block is bolted securely onto the standard rail. Additional electrical modules / terminals can be aligned in rows on the sides of the valve block.

Procedure:

→ Detach the adjacent modules / terminals (if fitted).

→ Release the attachment of the valve block on the standard rail. To do this, turn the fastening screws all the way counter-clockwise.

→ Lift the valve block vertically off the standard rail.

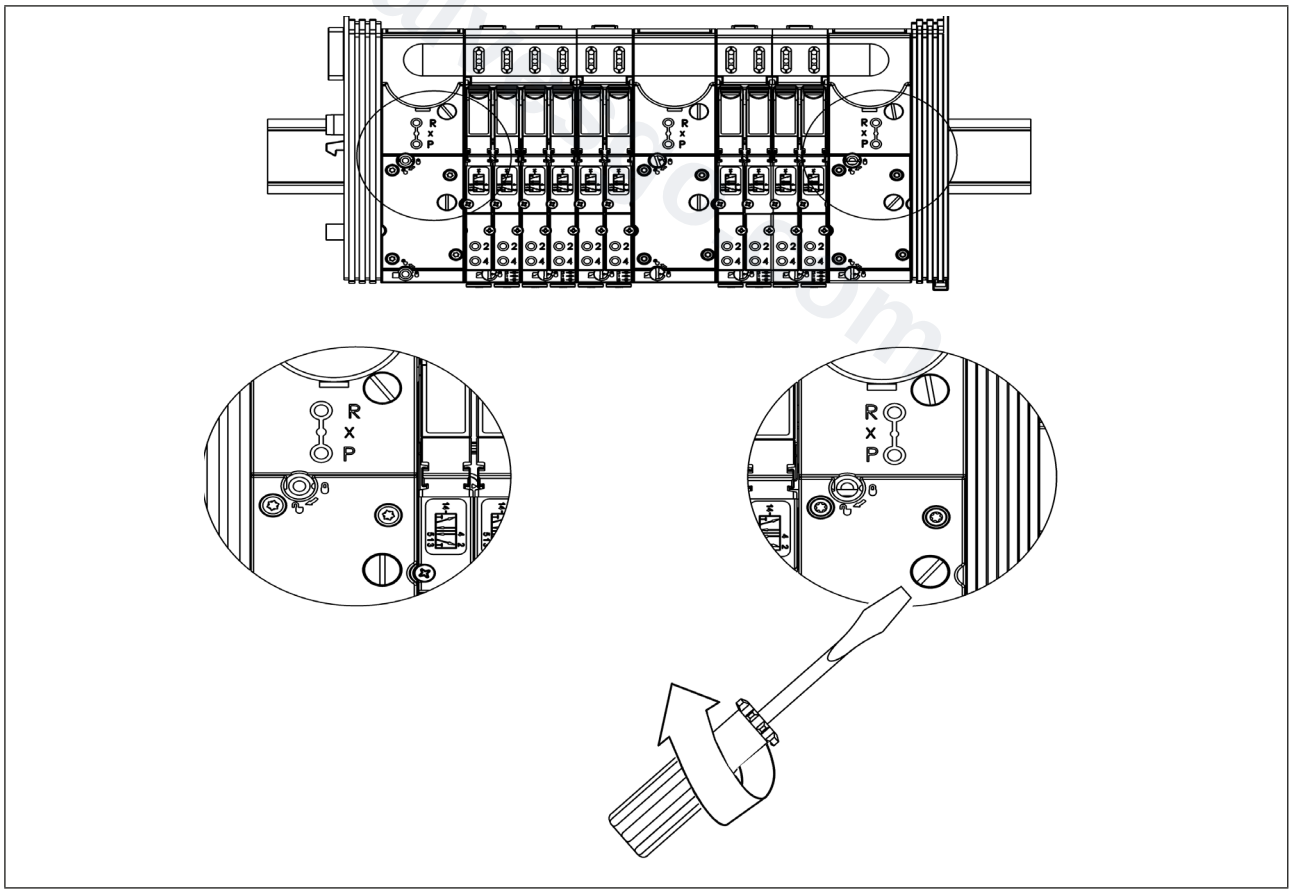

Figure 28: Releasing the attachment of the valve block on the standard rail

There must be adequate space between valve block and predecessor module (power module ET200s : PM-E DC 24V) > 6 mm

MAN 1000010121 EN Version: R Status: RL (released | freigegeben) printed: 10.10.2026

valvesgo.com

→ Detach the modules / terminals from the standard rail according to the manufacturer's description.

NOTE!

The interface of the left connection module contains elements which may break off if force is used. Ensure that the power module has been detached correctly and that there is adequate clearance in between.

- Never place the valve block on its sides and observe the permitted installation positions!

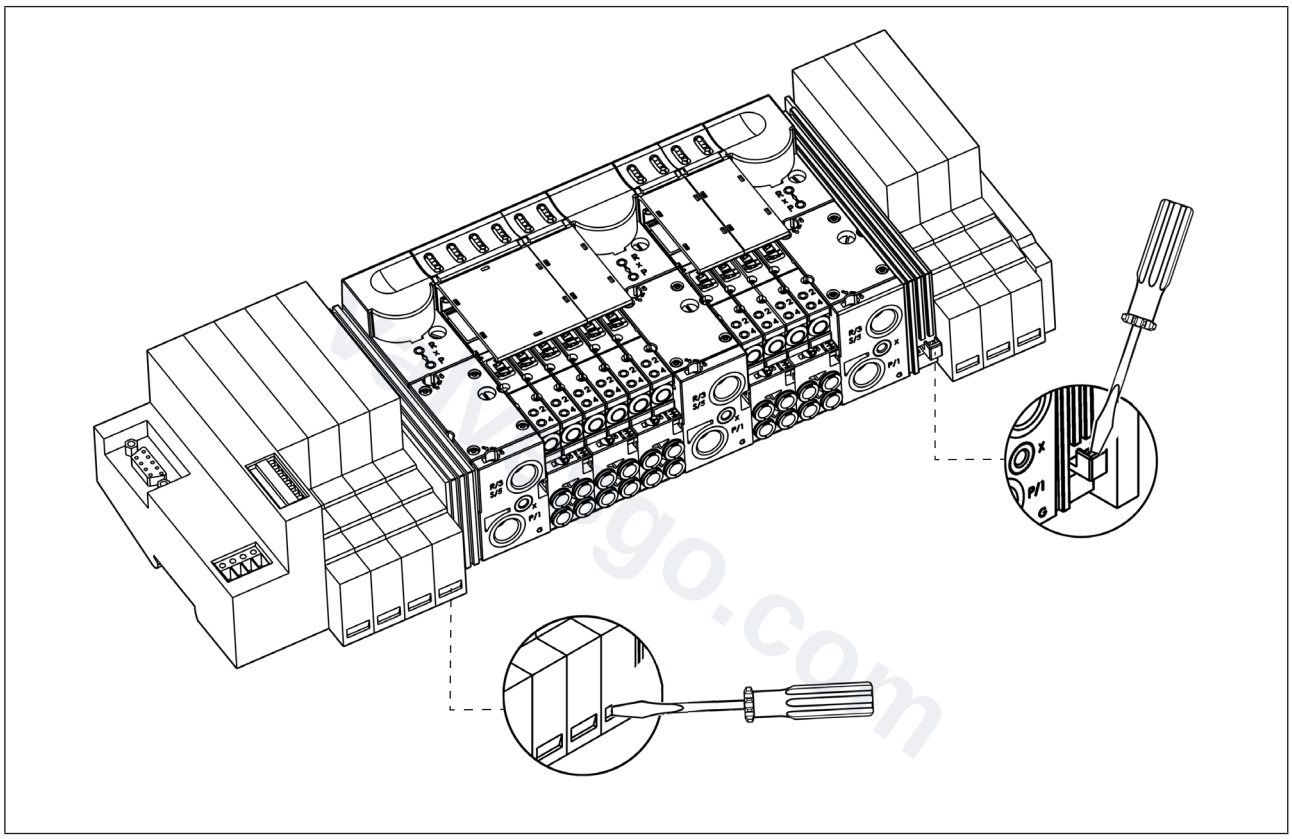

Figure 29: Releasing slide using a screwdriver

→ Remove the ET200S end module from the right valve block interface by releasing it in the slide of this interface using a screwdriver. This releases the catch hook of the end module. The end module can be removed to the right along the top-hat rail.

→ Hold the valve block firmly and loosen the fastening screws on the valve block. To do this, turn the fastening screws all the way counter-clockwise.

→ Now press the valve block against the top-hat rail using one hand.

→ Insert a screwdriver into the slide of the terminal module on the power module in front of the valve block. Now tilt and release the catch hook of the power module/valve block interface.

→ Slide the valve block by approx. 10 mm to the right along the top-hat rail until the catch hook is exposed.

→ Using both hands, remove the block perpendicular to the standard rail.

MAN 1000010121 EN Version: R Status: RL (released | freigegeben) printed: 10.10.2026

valvesgo.com

8.3. Installing the AirLINE system (e.g. in the control cabinet)

NOTE!

- Before installation, check that the fastening rail is anchored firmly in the control cabinet or in the system.
- Observe the specifications in the configuration file for the installation sequence.

→ Connect all electrical modules/terminals on the left of the valve block to the standard rail according to the manufacturer's specifications.

→ Check that the last module in front of the valve block is a power module.

→ Place the valve block on the standard rail and slide it onto the already installed assembly until the lock hook clicks into position.

→ Hold the valve block firmly and tighten the fastening screws clockwise.

→ The AirLINE system ends with the end module of the ET200S. Place the end module on the right of the valve block and slide it onto the right pneumatic interface until the lock hook engages.

→ The installation of the AirLINE system on the standard rail is now complete.

The valve block is not connected securely to the standard rail before the fastening screws are tightened. During the entire installation ensure that it cannot fall down.

8.4. Changing the function module

DANGER!

Danger – high pressure!

- Before dismounting pneumatic lines and valves, turn off the pressure and vent the lines.

Risk of short-circuit!

- Do not insert any foreign objects into the base module (24 V supply bus)!

The function module is a component of the electronic base module. It can be replaced in consideration of the points listed below:

→ Depressurize AirLINE system.

→ Using a screwdriver, loosen the fastening screws of the valves.

→ Remove valve from the valve plug.

→ Flange seal and O-ring must not be soiled.

→ Detach function module above rear catch mechanism and remove vertically without tilting it from the distributor module (backplane bus).

MAN 1000010121 EN Version: R Status: RL (released | freigegeben) printed: 10.10.2026

valvesgo.com

→ Place new function module vertically on the distributor module (backplane bus) and press down until it clicks into position.

→ Connect valve, with the cleanly inserted flange seals / O-rings, to the valve slot and tighten the screws according to the following assembly diagram (see "Figure 30: Tightening the screws").

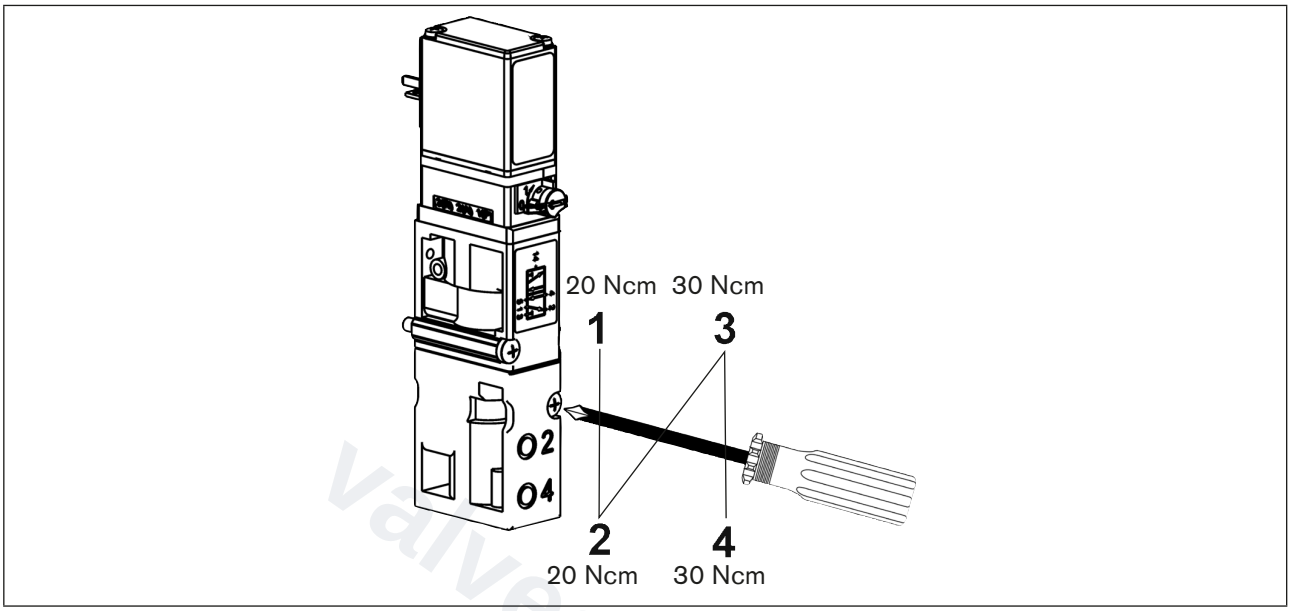

Figure 30: Tightening the screws

8.5. Fluid Installation

DANGER!

Risk of injury from high pressure in the equipment!

- Before dismounting pneumatic lines and valves, turn off the pressure and vent the lines.
- Design the connections with the largest possible volume.
- Close the open connections not required with lock screws.
- The connections for the pilot control exhaust air (x) must not be sealed.
- Check that connections 1 and 3 or 5 have been configured correctly; these must not be mixed up.

MAN 1000010121 EN Version: R Status: RL (released | freigegeben) printed: 10.10.2026

valvesgo.com

8.5.1. Tightening torques for port connections

Observe the following tightening torques when screwing into the port connections. The specified tightening torque may vary depending on the sealing system.

Port size	Marking/function	Recommended tightening torque [Nm]	Maximum tightening torque [Nm]
G3/8	P, R/S connection (connection modules 16 mm)	6…9	40
G1/4	P, R/S connection (connection modules 11 mm)	4…7	20
G1/8	Auxiliary pilot air (connection modules 16 mm)	3…6	10
M5	Auxiliary pilot air (connection modules 11 mm)	1…1.2	3

8.5.2. Pneumatic connections - feed

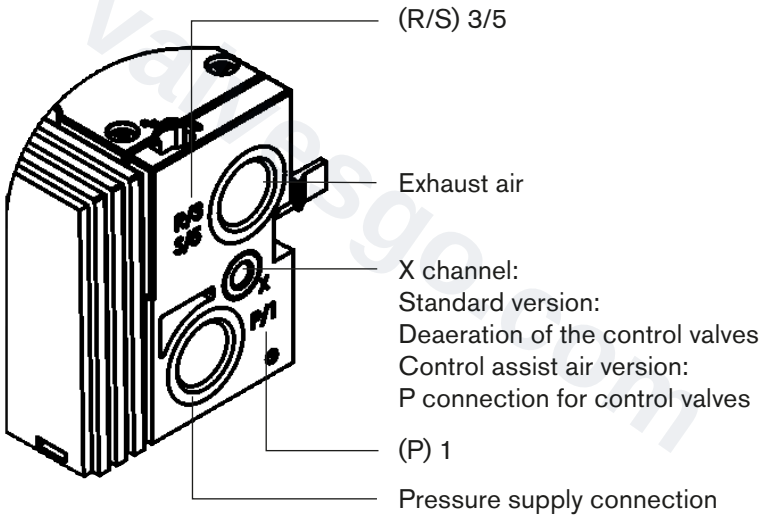

Figure 31: Pneumatic connections

Procedure

→ Depending on the version, insert (D10) or screw (G1/4, NPT 1/4) the connections to the corresponding working connections.

NOTE!

For the plug-in connections the hose pipes must meet the following requirements:

- Minimum hardness of 40 Shore D (in accordance with DIN 53505 or ISO 868);
- Outer diameter in accordance with DIN 73378 (max. permitted deviation ± 0.1 mm of the nominal dimension);
- Burr-free, cut off at right angles and undamaged on the outer diameter;
- The hose pipes must be pressed all the way into the plug-in connections.

MAN 1000010121 EN Version: R Status: RL (released | freigegeben) printed: 10.10.2026

valvesgo.com

8.5.3. Removing the plug-in connections

→ To detach the pipes, press in the thrust ring and pull out the hose pipe.

8.5.4. Pneumatic connections - valve discs

NOTE!

For 3/2-way valves the upper connections remain free!

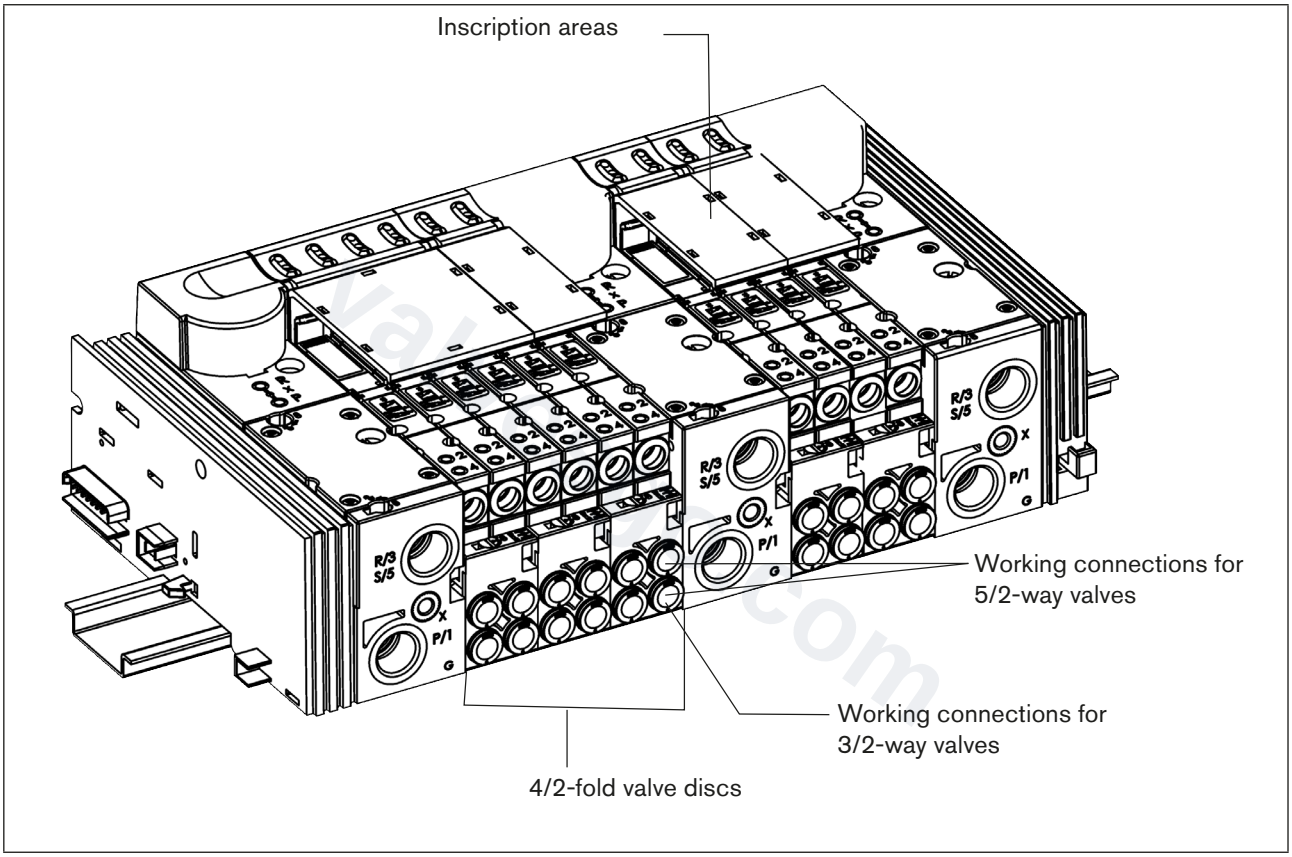

Figure 32: Pneumatic connections - valve discs

Variants

5/2-way valves

	Variant 1	Variant 2	Variant 3
Working connection upper (2)	M5	M7	D6, D4, D1/4
Working connection lower (4)	M5	M7	D6, D4, D1/4

3/2-way valves

	Variant 1	Variant 2	Variant 3
Working connection upper (0)	Sealed internally	Sealed internally	Sealed internally
Working connection lower (2)	M5	M7	D6, D4, D1/4

MAN 1000010121 EN Version: R Status: RL (released | freigegeben) printed: 10.10.2026

valvesgo.com

Installation

→ Depending on the version, insert (D6, D4, D1/4) or screw (M5, M7) the connections to the corresponding working connections.

→ Connection nipples can be used for threaded versions.

Inscription of the connections:

→ Label the inscription areas with the data of the valve connections.

8.6. Electrical Installation

DANGER!

Risk of injury due to electrical shock!

- Before reaching into the device or the equipment, switch off the power supply and secure to prevent reactivation!
- Observe applicable accident prevention and safety regulations for electrical equipment!

The electrical installation of the AirLINE system corresponds to the installation of the decentralized peripheral device ET200S.

All steps required here can be found in the Siemens handbook "Decentralized Peripheral System ET200S" under Chapter 5 Wiring and equipping (ET200S EWA4NEB 780602401-06).

valvesgo.com

MAN 1000010121 EN Version: R Status: RL (released | freigegeben) printed: 10.10.2026

9. MAINTENANCE, TROUBLESHOOTING

9.1. Safety instructions

DANGER!

Risk of injury from high pressure in the equipment!

- Before dismounting pneumatic lines and valves, turn off the pressure and vent the lines.

Risk of injury due to electrical shock!

- Before reaching into the device or the equipment, switch off the power supply and secure to prevent reactivation!
- Observe applicable accident prevention and safety regulations for electrical equipment!

WARNING!

Risk of injury from improper maintenance!

- Maintenance may be carried out by authorized technicians only and with the appropriate tools!

Risk of injury from unintentional activation of the system and an uncontrolled restart!

- Secure system from unintentional activation.
- Following maintenance, ensure a controlled restart.

valvesgo.com

9.2. Troubleshooting

Malfunction	Possible cause	Remedial action
Valves do not switch	No or inadequate operating voltage	Check the electrical connection Ensure the operating voltage according to type plate.
	Manual actuation not in neutral position	Move manual actuation to zero position
	Inadequate or no pressure supply	Design the pressure supply with the largest possible volume (even for upstream devices such as pressure controllers, maintenance units, shut-off valves, etc.) **Minimum operating pressure ≥ 2.5 bar**

MAN 1000010121 EN Version: R Status: RL (released | freigegeben) printed: 10.10.2026

Malfunction	Possible cause	Remedial action
Valves switch with a delay or blow off at the deaeration connections	Inadequate or no pressure supply	Design the pressure supply with the largest possible volume (even for upstream devices such as pressure controllers, maintenance units, shut-off valves, etc.) **Minimum operating pressure ≥ 2.5 bar**
	Valves are not in home position (de-energized) during pressure build-up	Pressurize the valve block before you switch the valves.
	Deaeration of the exhaust air ducts inadequate due to too small or dirty silencers (back pressures).	Use appropriately sized silencers or expansion tanks. Clean dirty silencers.
	Impurities or foreign objects in the pilot valve or main valve	Change the valve
Leaking valve blocks	Missing or crushed O-rings between the modules; Missing or incorrectly positioned profile seals between valve and pneumatic base module	Determine the leaks or missing seals
		Insert missing seals or replace damaged seals.

valvesgo.com

9.3. Maintenance of components

9.3.1. UL handling

Valve clusters of Type 8644 with UL license may be converted by UL-certified production, installation, or service centers only.

Do not reach into the system. This refers in particular to:

- Damage of components,
- Expansion of the valve clusters by modules; the catch mechanism of the pneumatic modules must be released for this.

NOTE!

Replacement of the valves is a permitted maintenance operation; follow the general safety instructions.

MAN 1000010121 EN Version: R Status: RL (released | freigegeben) printed: 10.10.2026

10. START-UP

10.1. Safety instructions

WARNING!

Risk of injury from improper operation!

Improper operation may result in injuries as well as damage to the device and the area around it.

- Before start-up, ensure that the operating personnel are familiar with and completely understand the contents of the operating instructions.
- Observe the safety instructions and intended use.
- Only adequately trained personnel may operate the equipment/the device.

10.2. Fluid start-up

NOTE!

- Switch on the supply pressure.
- Only then switch on the power supply!

Procedures before fluid start-up

→ Check connections, voltage and operating pressure!

→ Ensure that max. operating data (see type plate) are not exceeded!

→ Check that connections 1 and 3 or 5 have been configured correctly; these must not be mixed up!

→ Release manual actuation during electrical operation!

10.3. Electrical start-up

The start-up of the AirLINE system corresponds to the installation of the decentralized peripheral device ET200S. All steps required here can be found in the Siemens handbook "Decentralized Peripheral System ET200S", Chapter 6 Start-up and diagnosis (ET200S EWA4NEB 780602401-06).

valvesgo.com

MAN 1000010121 EN Version: R Status: RL (released | freigegeben) printed: 10.10.2026

valvesgo.com

10.3.1. Selection of the modules in the GSD file

The module designations of the different electrical base modules in the GSD file can be found in the following table.

Add-on dimension	Module designation	Entry in GSD file
11 mm	ME02 / 2-fold monostable	2 Valves 3/2, 5/2 monostable 2DO
		2 Valves 3/2, 5/2 monostable* 2DO
	ME02 / 2-fold 2 x monostable	2 Double Valves 3/2 monostable 4DO
		2 Double Valves 3/2 monostable* 4DO
	ME02 / 4-fold monostable	4 Valves 3/2, 5/2 monostable 4DO
		4 Valves 3/2, 5/2 monostable* 4DO
	ME02 / 2-fold bistable	2 Valves 5/3, 5/2 impulse 4DO
		2 Valves 5/3, 5/2 impulse* 4DO
16 mm	ME03 / 2-fold monostable	2 Valves 3/2, 5/2 monostable 2DO
		2 Valves 3/2, 5/2 monostable* 2DO
	ME03 / 4-fold monostable	4 Valves 3/2, 5/2 monostable 4DO
		4 Valves 3/2, 5/2 monostable* 4DO
	ME03 / 3-fold monostable	3 Valves 3/2, 5/2 monostable 4DO**
		3 Valves 3/2, 5/2 monostable* 4DO**
	ME03 / 2-fold monostable	2 Valves 5/3, 5/2 impulse 4DO
		2 Valves 5/3, 5/2 impulse* 4DO

* Module is combined with predecessor module, for utilization of the data byte
** One bit remains unassigned

Connection modules and intermediate feeds are not bus users and are not considered!

valvesgo.com

MAN 1000010121 EN Version: R Status: RL (released | freigegeben) printed: 10.10.2026

11. PACKAGING AND TRANSPORT

NOTE!

Transport damages!

Inadequately protected equipment may be damaged during transport.

- During transportation protect the device against wet and dirt in shock-resistant packaging.
- Avoid exceeding or dropping below the allowable storage temperature.

MAN 1000010121 EN Version: R Status: RL (released | freigegeben) printed: 10.10.2026

valvesgo.com

valvesgo.com

12. STORAGE

NOTE!

Incorrect storage may damage the device.

- Store the device in a dry and dust-free location!
- Storage temperature: -20 ... +60°C

13. DISPOSAL

→ Dispose of the device and packaging in an environmentally friendly manner.

NOTE!

Damage to the environment caused by device components contaminated with media.

- Observe applicable disposal regulations and environmental regulations.

Observe national waste disposal regulations.

valvesgo.com

MAN 1000010121 EN Version: R Status: RL (released | freigegeben) printed: 10.10.2026

MAN 1000010121 EN Version: R Status: RL (released | freigegeben) printed: 10.10.2026

valvesgo.com

bürkert
FLUID CONTROL SYSTEMS

MAN 1000010121 EN Version: R Status: RL (released | freigegeben) printed: 10.10.2026

valvesgo.com

www.burkert.com