bürkert
FLUID CONTROL SYSTEMS

Type 2101

2/2 way globe valve
2/2-Wege-Geradsitzventil
Vanne à siège droit 2/2 voies



valvesgo.com

Operating Instructions

Bedienungsanleitung
Manuel d'utilisation

MAN 1000295308 EN Version: JStatus: RL (released | freigegeben) printed: 22.08.2026

valvesgo.com

valvesgo.com

We reserve the right to make technical changes without notice.
Technische Änderungen vorbehalten.
Sous réserve de modifications techniques.

© Bürkert Werke GmbH & Co. KG, 2008 - 2025

Operating Instructions 2502/16_EU-ML_00806076 / Original DE

valvesgo.com

1 OPERATING INSTRUCTIONS 4
1.1 Symbols 4
1.2 Definition of terms/abbreviations 4
2 INTENDED USE 5
3 BASIC SAFETY INSTRUCTIONS 5
4 GENERAL NOTES 7
4.1 Contact addresses 7
4.2 Warranty 7
4.3 Information on the Internet 7
5 PRODUCT DESCRIPTION 7
5.1 General description 7
5.2 Properties 7
5.3 Intended area of application 8
6 STRUCTURE AND FUNCTION 8
6.1 Structure 8
6.2 Function 9
7 TECHNICAL DATA 11
7.1 Standards and directives 11
7.2 Type label 11
7.3 Conversion of actuator size 12
7.4 Operating conditions 12
7.5 General technical data 17
8 INSTALLATION 18
8.1 Notes on installation 18
8.2 Before installation 18
8.3 Installation 20
8.4 Attaching a sensor or fitting to the relief bore 22
8.5 Connect device pneumatically 23
8.6 Start-up 24
8.7 Disassembly 25
9 ELECTRICAL CONTROL UNIT 25
10 MAINTENANCE, CLEANING 25
10.1 Maintenance work 26
10.2 Replacing wearing parts 27
11 FAULTS 37
12 SPARE PARTS 38
12.1 Replacement part set 38
12.2 Installation tools 40
13 TRANSPORT, STORAGE, PACKAGING 41

valvesgo.com

1 OPERATING INSTRUCTIONS

The operating instructions describe the entire life cycle of the device. Keep these instructions ready to hand at the operating site.

Important safety information.

- ▶ Read these instructions carefully.
- ▶ Above all, observe the safety instructions, intended use and operating conditions.
- ▶ Persons who work on the device must read and understand these instructions.

1.1 Symbols

DANGER

Warning of an immediate danger.

- ▶ Failure to comply will result in death or serious injury.

WARNING

Warns of a potential danger.

- ▶ Failure to observe these warnings may result in serious injuries or death.

CAUTION

Warns of a potential hazard.

- ▶ Failure to comply with these instructions may result in moderate or minor injury.

ATTENTION

Warns of damage.

Important tips and recommendations.

Refers to information in these operating instructions or in other documentation.

- ▶ Highlights instructions to avoid a danger.

→ Designates a procedure which you must carry out.

1.2 Definition of terms/abbreviations

Term	Definition for these instructions
Device	2/2-was globe valve Type 2101
bar	In these instructions, the unit bar stands for relative pressure. The absolute pressure is stated separately in bar(abs).

valvesgo.com

2 INTENDED USE

Unauthorised use of the Type 2101 globe valve may be dangerous to people, nearby equipment and the environment.

- The device is designed to control the flow of liquid and gaseous media.
- The globe valve is suitable for steam sterilization.
- In the potentially explosive atmosphere, only use devices that are approved for this purpose. These devices are identified by a separate Ex type label. Before use, note the information on the separate Ex type label and the Ex additional instructions or the separate Ex operating Instructions.
- To use the device, observe the permitted data, operating conditions and application conditions. These specifications can be found in the contract documents, the operating instructions and on the type label.
- Protect device from harmful environmental influences (e.g. radiation, air humidity, fumes). For any matters requiring clarification, contact the relevant sales department.
- Use the device only in conjunction with third-party devices and components recommended or approved by Bürkert.
- Prerequisites for safe and trouble-free operation are correct transport, correct storage and installation as well as careful operation and maintenance.
- The exhaust air can be contaminated by lubricants in the actuator.
- Only use the device as intended.

3 BASIC SAFETY INSTRUCTIONS

These safety instructions do not take into account any unforeseen circumstances or events that occur during installation, operation and maintenance. The operator is responsible for observing the location-specific safety regulations, also with reference to personnel.

DANGER

Risk of injury due to high pressure in the system or device.

- Before working on the system or device, switch off the pressure and ventilate or empty the lines.

Risk of injury due to electric shock (with installed electrical components).

- Before working on the device or system, switch off the power supply. Secure against reactivation.
- Observe the applicable accident prevention and safety regulations for electrical devices.

WARNING

Risk of injury when opening the actuator.

The actuator contains a spring under tension. When the actuator is opened, the spring will jump out and may cause injuries.

- Do not open the actuator.

Risk of injury due to moving parts in the device.

- Do not reach into openings in the device.

valvesgo.com

WARNING

Danger due to loud noises.

- Depending on the usage conditions, the device may generate loud noises. Detailed information on the probability of loud noises is available from the respective sales department.
- Wear hearing protection when in the vicinity of the device.

CAUTION

Risk of burns or fire from hot device surfaces due to prolonged operation.

- Only touch the device when wearing protective gloves.
- Keep the device away from highly flammable substances and media.

Discharge of medium if packing gland worn.

- Relief bore must be regularly inspected for any medium leakages.
- If medium is leaking from the relief bore, the packing gland must be replaced.
- If the medium is hazardous, secure the area around the leakage to prevent risks.

Risk of injury due to bursting lines and device.

- Because of the risk of pressure surge, valves with the flow direction above the seat must not be used for fluid media.
- Observe the type of flow and type of medium for operating the device.

General hazardous situations.

To prevent injuries, observe the following:

- Secure device or system to prevent unintentional activation.
- Only trained technicians may perform installation and maintenance work.
- Perform installation work and maintenance work using suitable tools only.
- Following interruption of the process, ensure that the process is restarted in a controlled manner. Observe the sequence:
  1. Apply electrical or pneumatic supply.
  2. Charge with medium.
- Use the device only when it is in perfect condition and in accordance with the operating instructions.
- For applications planning and operation of the device, observe the plant-specific safety regulations.
- The plant owner is responsible for the safe operation and handling of the plant.
- Observe the general rules of technology.
- Install the appliance in accordance with the regulations applicable in your country.

Please observe the order to protect against damage to the device:

- Feed only those media listed in chapter “7 Technical data” into the medium ports.
- Do not make any changes to the device and do not subject it to mechanical stress.
- Transport, install and dismantle heavy device only with the aid of a second person and using suitable tools.

valvesgo.com

4 GENERAL NOTES

4.1 Contact addresses

Germany

Bürkert Fluid Control Systems
Sales Center
Christian-Bürkert-Str. 13–17
D-74653 Ingelfingen
Tel. +49 (0) 7940 - 10 91 111
Fax +49 (0) 7940 - 10 91 448
E-mail: info@burkert.com

International

The contact addresses can be found on the back pages of the printed operating instructions.

They are also available online at: country.burkert.com

4.2 Warranty

A precondition for the warranty is that the device is used as intended in consideration of the specified operating conditions.

4.3 Information on the Internet

Operating instructions and data sheets for Type 2101 can be found online at: country.burkert.com

5 PRODUCT DESCRIPTION

5.1 General description

The 2/2-way globe valve Type 2101 is suitable for liquid and gaseous media. Using neutral gases or air (control media), it controls the flow of water, alcohol, oil, fuel, hydraulic fluid, saline solution, lye, organic solvents and vapour (flow media).

One special characteristic of the globe valves is the screwed-in seats, which can be used to reduce the seat size.

Definition DN
DN refers to the nominal diameter of the seat, not that of the port connection.

5.2 Properties

- High seal tightness due to self-adjusting packing glands (spindle seal element)
- High seat tightness due to swivel plate
- Actuator can be seamlessly rotated by 360°
- Maintenance-free under normal conditions

5.2.1 Options

- Control unit: depending on the requirements, various control unit variants are available.
- Stroke limit: limit of maximum opening / flow rate due to adjusting screw.
- Position feedback sensor: the device is available with mechanical limit switches or inductive proximity switches.

valvesgo.com

5.2.2 Device variants

The globe valve is available for the following actuator sizes:
ø 50 mm, ø 70 mm, ø 90 mm, ø 130 mm and ø 225 mm.

5.2.3 Restrictions

WARNING

Risk of injury from pressure surge.

A pressure surge could cause lines and the device to burst.

Because of the risk of pressure surge, **valves with the flow direction above the seat must not be used for fluid media.**

- ▸ Observe the type of flow and type of medium for operating the device.

5.3 Intended area of application

Observe the maximum pressure range on the type label!

- For neutral gases and liquids up to 40 bar.
- Steam up to 230 °C.
- Hot water up to 200 °C.
- Aggressive media.

6 STRUCTURE AND FUNCTION

6.1 Structure

The globe valve consists of a pneumatically actuated piston actuator and a 2-way body.

The actuator is made from polyphenylene sulphide (PPS) or stainless steel (for actuator size 225).

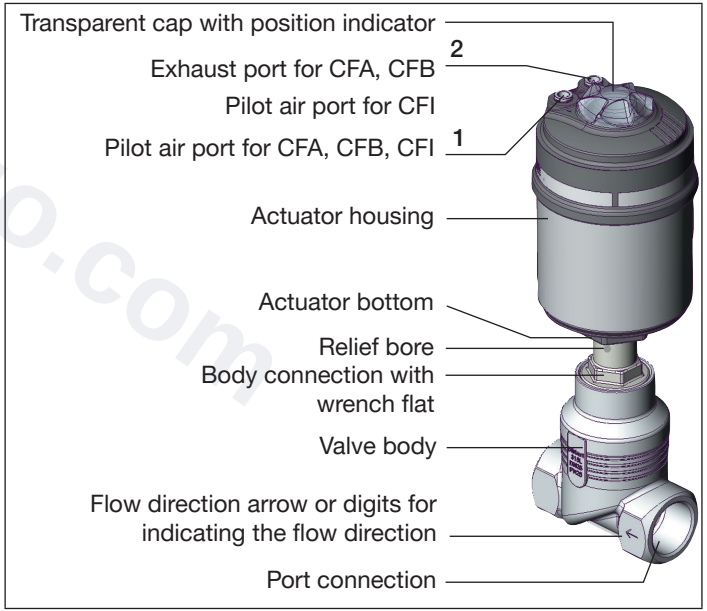

Fig. 1: Structure and description, globe valve type 2101

valvesgo.com

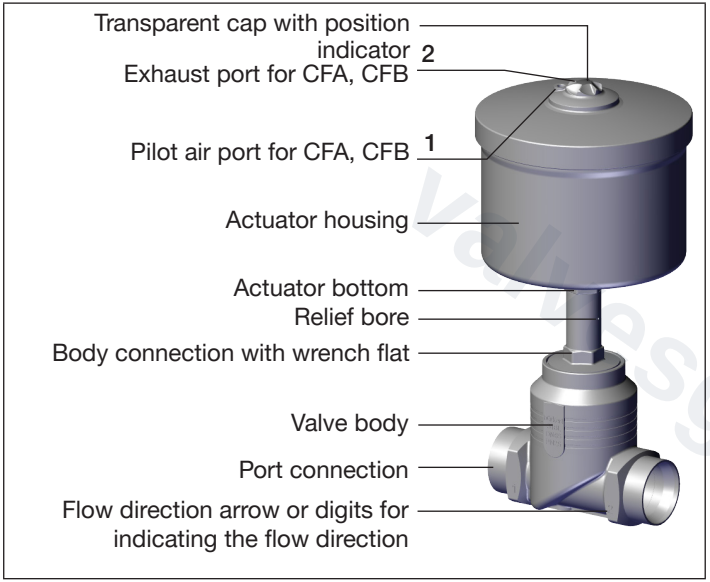

Fig. 2: Structure and description, globe valve type 2101, actuator size 225

6.2 Function

Depending on the variant, the valve seat is closed in the direction of or against the medium flow.

Spring force (CFA) or pneumatic pilot pressure (CFB and CFI) generate the closing force on the swivel plate. A spindle connected to the actuator piston transmits the force.

6.2.1 Control functions (CF)

WARNING

For control function I – risk of pilot pressure failure.

With control function I, the control unit and reset are pneumatic. No defined position is reached during a pressure failure.

▸ To ensure a controlled restart of the device, first apply pilot pressure and then activate the medium.

Control function A (CFA) Closed by spring force in rest position	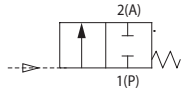
Control function B (CFB) Opened by spring force in rest position	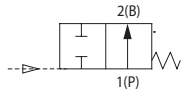
Control function I (CFI) Actuating function via reciprocal pressurisation.	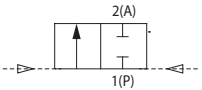

valvesgo.com

6.2.2 Flow direction below seat

Depending on the variant, the valve is closed against the medium flow either with spring force (control function A, CFA) or pilot pressure (control function B or I, CFB or CFI).
As the medium is present under the swivel plate, the operating pressure contributes to the opening of the valve.

WARNING

Valve leak if there is too little minimum pilot pressure or high operating pressure!

Minimum pilot pressure for CFB and CFI that is too low, or failing to meet the permitted operating pressure, can cause a leak in the valve seat.

- Adhere to minimum pilot pressure.
- Do not exceed the operating pressure.

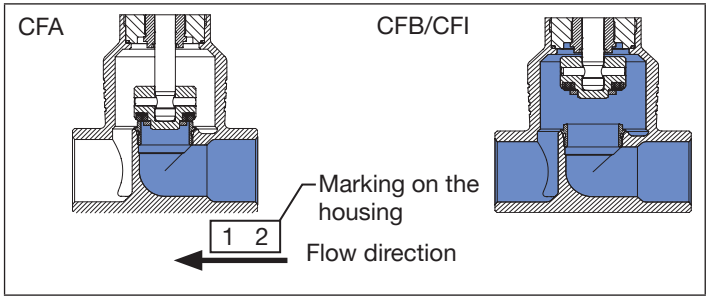

Fig. 3: Flow direction below seat (idle on/off, closing against medium)

6.2.3 Flow direction above the seat

The valve is closed with the medium flow via spring force (control function A, CFA). Because the operating pressure is above the swivel plate, it helps the valve close and also contributes to sealing the valve seat. The valve opens via pilot pressure.

WARNING

Risk of injury from pressure surge.

A pressure surge could cause lines and the device to burst. Because of the risk of pressure surge, **valves with the flow direction above the seat must not be used for fluid media**.

- Observe the type of flow and type of medium for operating the device.

In order to ensure complete opening, the minimum pilot pressure must be used.

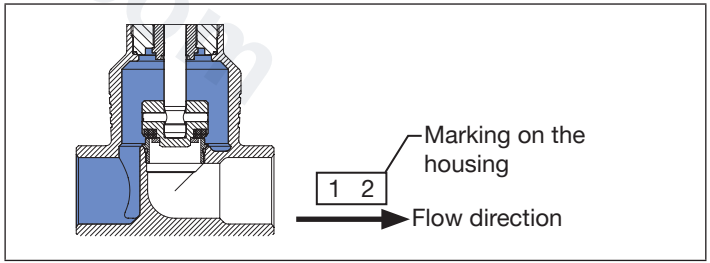

Fig. 4: Flow direction above the seat (idle off, closing with the medium)

valvesgo.com

7 TECHNICAL DATA

7.1 Standards and directives

The device complies with the valid EU harmonisation legislation. In addition, the device also complies with the requirements of the laws of the United Kingdom.

The harmonised standards that have been applied for the conformity assessment procedure are listed in the current version of the EU Declaration of Conformity/ UK Declaration of Conformity.

According to Pressure Equipment Directive observe the following operating conditions:

DN (port connection)	Maximum pressure for compressible fluids of Group 1 (dangerous gases and vapours according to Art. 3, No. 1.3, letter a, first dash)
DN65	15 bar
DN80	12.5 bar
DN100	10 bar

7.2 Type label

Example:

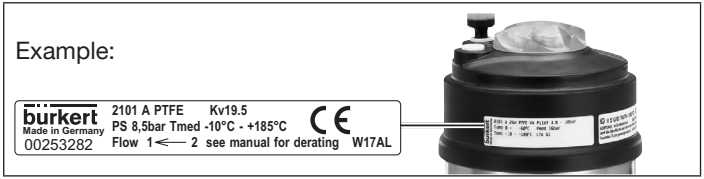

Fig. 5: Type label example

WARNING

Risk of injury from high pressure.

Important, device-specific technical data are listed on the type label.

- Note the permitted pressure range on the device type label.

Example:

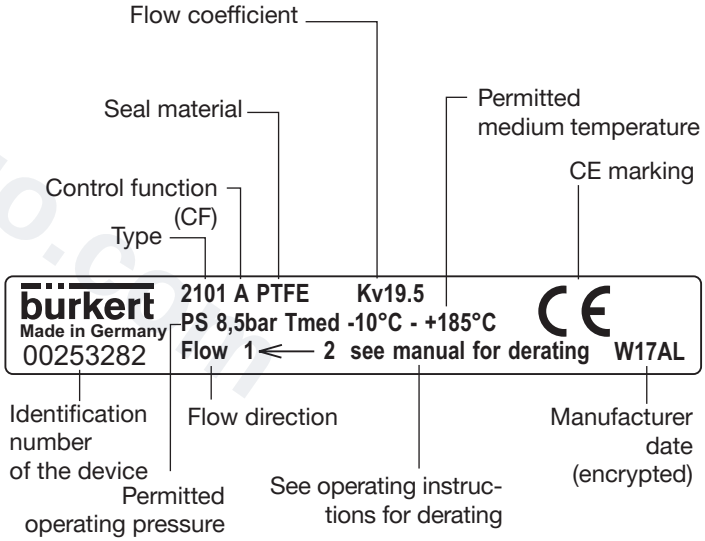

valvesgo.com

7.3 Conversion of actuator size

Actuator size [mm]	Designation	Outer diameter A [mm]	Scale drawing
50	D	64.5	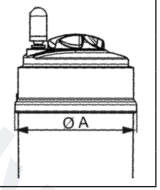
70	M	91	
90	N	120	
130	P	159	
225	L	245	

Tab. 1: Conversion of actuator size

7.4 Operating conditions

7.4.1 Temperature ranges

Actuator size [mm]	Actuator material	Medium temperature [°C] for PTFE-seat seal	Medium temperature [°C] for high temperature variant with PEEK seat seal	Environment [°C][2]
ø 50	PPS	–10...+185 –10...+100[1]	–10...+230	–10...+60[3] –10...+100[4]
ø 70				
ø 90				
ø 130				
ø 225	Stainless steel	–10...+185	–10...+230	–10...+100

Tab. 2: Temperature ranges

1) *With V code MP03*
2) *When using a pilot valve the maximum ambient temperature is +55 °C*
3) *Pilot air connector as push-in connector*
4) *Control air connector as threaded bushing*

Derating pressure and temperature ranges

Usage limits of the valve (derating operating pressure)

Temperature	Operating pressure	
	PN25	PN40
–10...+50 °C	25 bar	40 bar
100 °C	24.5 bar	39,2 bar
150 °C	22.4 bar	-
200 °C	20.3 bar	-
230 °C	19 bar	-

Tab. 3: Derating the operating pressure as per DIN EN 12516-1

Temperature	Operating pressure
–29...+38 °C	19 bar
50 °C	18.4 bar
100 °C	16.2 bar
150 °C	14.8 bar
200 °C	13.7 bar
230 °C	12.7 bar

Tab. 4: Derating the operating pressure as per ASME B16.5/ ASME B16.34 Cl.150

Temperature	Operating pressure
–10...+50 °C	14 bar
100 °C	14 bar
150 °C	13.4 bar
200 °C	12.4 bar
230 °C	11.7 bar

Tab. 5: Derating the operating pressure as per JIS B 2220 10K

valvesgo.com

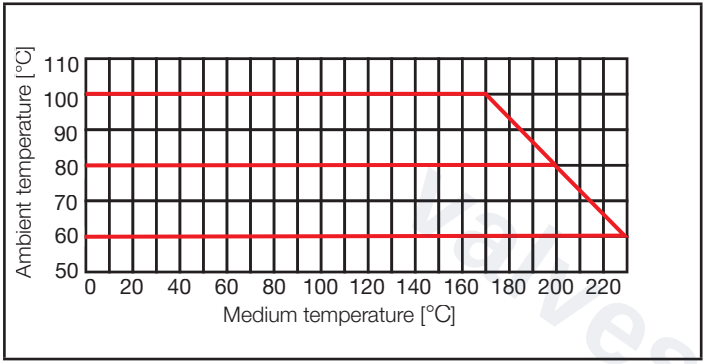

Fig. 6: Derating Element ANTG 50, 70, 90, 130

7.4.2 Pressure ranges

Actuator size [mm]	Maximum pilot pressure[5)]
ø 50, ø 70, ø 90	10 bar
ø 130	7 bar
ø 225, CFA	7 bar
ø 225, CFB	5 bar

Tab. 6: Pressure ranges

Operating pressure for control function A, flow direction below seat (standard):

DN	Maximum operating pressure [bar]				
	Actuator size ø [mm]				
	50	70	90	130	225
15	25	25/40[6)]	-	-	
20	16	25	40[6)]		
25	9.0	16	25/40[6)]		
32	-	8.5	25		
40		6.0	16	25	
50		4.0	10	25	
65		-	5.0	16(15[7)])	25 (15[7)])
80			-	10	25 (12.5[7)])
100				6.0	16 (10[7)])

Tab. 7: Operating pressure CFA, standard

5) *For device variant ø 70/DN 50/MC 13 the max. pilot pressure is limited to 7 bar*

6) *Operating pressure 40 bar only with V code MP03*

7) *According to Pressure Equipment Directive for compressible fluids of Group 1 (dangerous gases and vapours according to Art. 3, No. 1.3, letter a, first dash)*

valvesgo.com

Pilot pressure for control function A, flow direction below seat (standard):

DN	Minimum pilot pressure [bar]				
	Actuator size ø [mm]				
	50	70	90	130	225
15	5.2	4.8	-	-	
20	5.2	4.8			
25	5.2	4.8	5.0		
32	-	4.8	5.0		
40		4.8	5.0	5.0	
50		4.8	5.0	5.0	
65		-	5.0	5.6	3.9
80			-	-	5.6
100					

Tab. 8: Pilot pressure CFA, standard

Operating pressure and pilot pressure for control function A, flow direction below seat, reduced spring force (EC04)

DN	Maximum operating pressure [bar]					Minimum pilot pressure [bar]				
	Actuator size ø [mm]					Actuator size ø [mm]				
	50	70	90	130	225	50	70	90	130	225
15	14	16	–	–	–	3.2	2.5	–	–	–
20	6	12								
25	3	6								
32	–	3.5	9			–		2.5		
40		2	6	16					2.5	
50		–	3.5	10			–			
65			–	7.5	20 (15[8)])			–	3.2	3.0
80				5	18 (12.5[8)])					3.8
100				–	12 (10[8)])				–	

Tab. 9: Operating and pilot pressure CFA, reduced spring force (EC04)

8) *According to Pressure Equipment Directive for compressible fluids of Group 1 (dangerous gases and vapours according to Art. 3, No. 1.3, letter a, first dash)*

valvesgo.com

Required minimum control pressure depending on the operating pressure

In the following graphs the required minimum control pressure is shown for control functions A, B and I depending on the operating pressure.

Control function A, flow direction above the seat

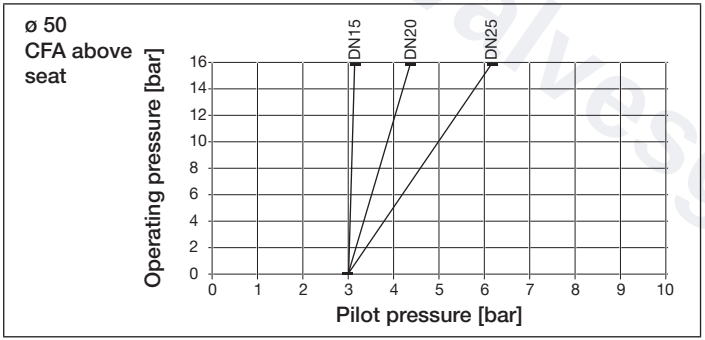

Fig. 7: Pressure diagram, actuator ø 50 mm, control function A, flow direction above the seat.

Control function A, flow direction above the seat

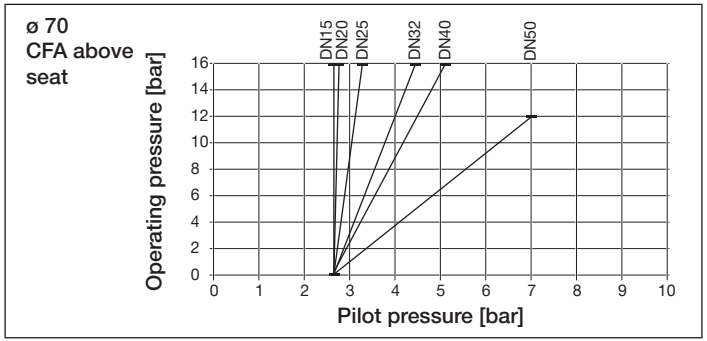

Fig. 8: Pressure diagram, actuator ø 70 mm, control function A, flow direction above the seat

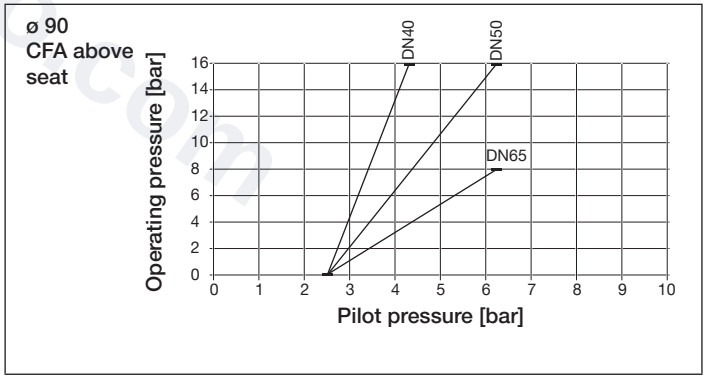

Fig. 9: Pressure diagram, actuator ø 90 mm, control function A, flow direction above the seat

valvesgo.com

Control function B and I, flow direction below seat

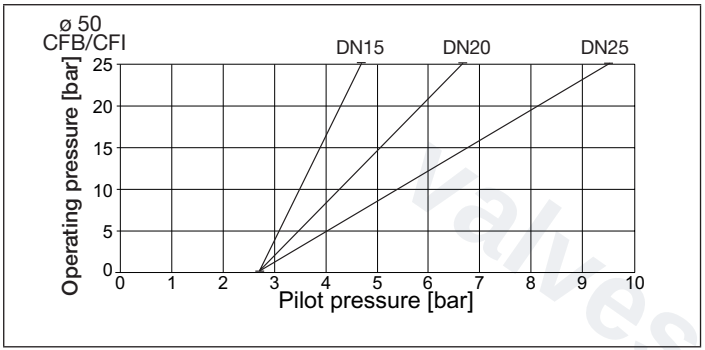

Fig. 10: Pressure diagram, actuator ø 50 mm, control function B and I, flow direction below seat

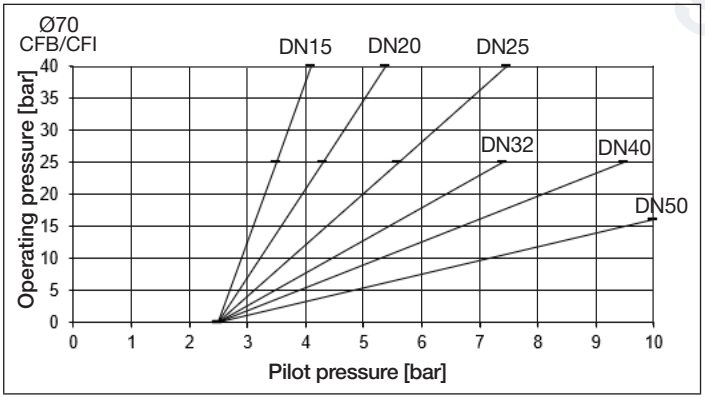

Fig. 11: Pressure diagram, actuator ø 70 mm, control function B and I, flow direction below seat

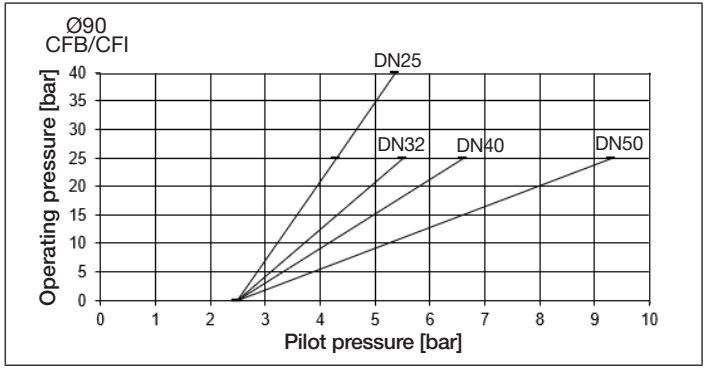

Fig. 12: Pressure diagram, actuator ø 90 mm, control function B and I, flow direction below seat

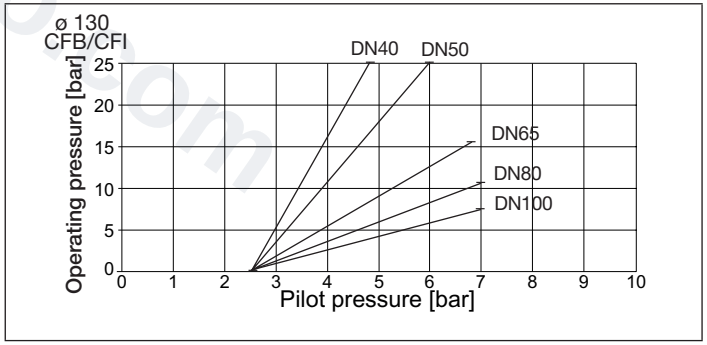

Fig. 13: Pressure diagram, actuator ø 130 mm, control function B and I, flow direction below seat

valvesgo.com

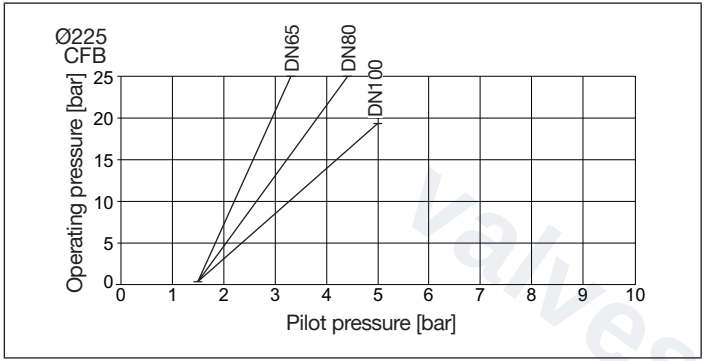

Fig. 14: Pressure diagram, actuator ø 225 mm, control function B, flow direction below seat

7.5 General technical data

Actuator size	See type label
Control function	See type label, for description of control functions see chapter "6.2"
Degree of protection	IP67 as per IEC 529/EN 60529

Media

Control medium	Neutral gases, air
Flow media	Water, alcohols, fuels, hydraulic fluids, saline solutions, lyes, organic solvents

Materials

Valve body	316L
Actuator	PPS and stainless steel
Sealing elements	FKM and EPDM
Spindle seal	PTFE V-rings with spring compensation (with silicone grease)
Seat seal	PTFE (NBR, EPDM, FKM, PEEK on request)
Spindle	1.4401 / 1.4404
Spindle guide up to DN65	PEEK
Spindle guide from DN80	1.4401 / 1.4404

Ports

Pilot air port	Push-in connector 6/4 mm or 1/4" more on request
Medium connection	Socket: G ½–G 4 (NPT, RC on request) Welded connection: as per ISO 4200, DIN 11850 R2 other connections on request

valvesgo.com

8 INSTALLATION

WARNING

Risk of injury due to improper installation.

- Installation may only be carried out by qualified personnel using suitable tools.
- Secure equipment against unintentional activation.
- Ensure that the system starts up in a controlled manner only.

For control function I – risk of pilot pressure failure.

The valve stays in an undefined position in the event of a pilot pressure failure.

- To ensure a controlled restart of the device, apply pilot pressure and activate the medium.

Risk of injury due to moving parts.

- Do not reach into openings in the device.

CAUTION

Risk of injury due to heavy device.

During transportation or installation work, a heavy device may fall down and cause injuries.

- Transport, install and remove heavy device with the aid of a second person only.
- Use suitable tools.

ATTENTION

Loose screw connection of the valve body connection with high mechanical stress or in applications with increased temperatures.

If the pipeline is subject to high mechanical stress (vibrations) or in applications with temperatures above 140 °C, the screw connection on the valve body connection must be checked before installation and regularly during operation. (For tightening torques, see table “Tab. 10”)

8.1 Notes on installation

- The installation location must be easily accessible and provide sufficient clearance for installation, removal and maintenance of the device
- Use suitable lifting gear to lift a heavy device
- Only lift heavy valves by the valve body and pneumatic actuator, not by the control unit (if present)
- Ensure that the pipes are aligned before connecting the valve
- Observe the direction of flow. Observe the information on the type label

8.2 Before installation

- The globe valve can be installed in any position, preferably with the actuator facing upwards

valvesgo.com

8.2.1 Preparatory work

→ Before working on the system or device, switch off the pressure and vent or drain the lines.

→ Clear impurities from pipelines (seal material, metal chips,etc.).

8.2.2 Removing actuator from the valve body

For devices with welded connection

ATTENTION

For valves with a mounted control unit:

When welding the valve body into the pipeline, the control unit must not be installed.

▸ Uninstall the control unit from the actuator (see chapter on installation in the operating instructions of the corresponding control unit).

→ Clamp valve body into a collet.

ATTENTION

Damage to the seat seal or seat contour!

▸ When removing the actuator, the valve must be in the open position.

→ For control function A pressurise the pilot air port 1 with compressed air (5 bar): Valve opens.

→ Place on the body connection with a suitable open-end wrench.

→ Unscrew actuator from the valve body.

For other device variants:

→ Only uninstall the actuator if required by the customer.

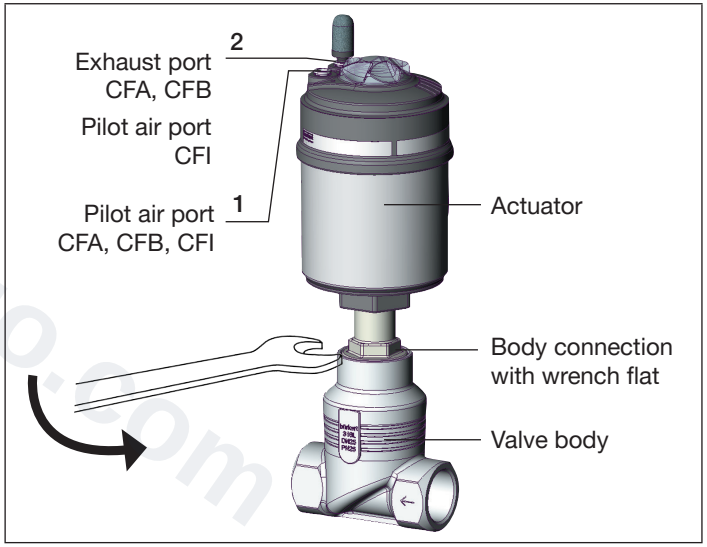

Fig. 15: Removing actuator from the valve body

valvesgo.com

8.3 Installation

WARNING!

Risk of injury due to improper installation!

Failure to observe the tightening torque value is dangerous due to the risk of damage to the device.

- Use an open-end wrench for installation, never a pipe wrench.
- Observe tightening torque (see “Tab. 10”).

Dirt trap for devices with approval according to DIN EN 161

According to DIN EN 161 "Automatic shut-off valves for gas burners and gas appliances", a dirt trap must be installed upstream of the valve. The dirt trap must prevent the penetration of a 1 mm test pin.

→ If the approval also applies to the stainless steel valve body, such a dirt trap must be attached in front of the globe valve.

8.3.1 Installing the body

Welded connection

→ Weld or bond valve body in pipeline system.

Other body variants

→ Connect valve body to pipeline.

8.3.2 Install actuator (welded connection)

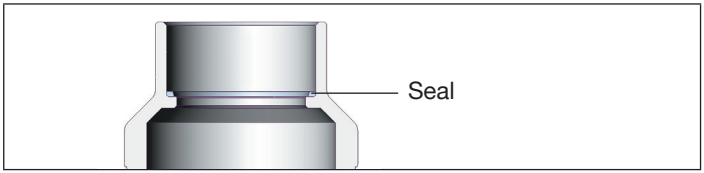

Fig. 16: Seal

→ Check seal and replace.

WARNING

Risk due to incorrect lubricants.

Unsuitable lubricant may contaminate the medium. There is a risk of explosion in oxygen applications!

- For specific applications, e.g. oxygen or analysis applications, use approved lubricants only.

→ Grease the external thread of the body connection (e.g. using Klüberpaste UH1 96-402 from Klüber).

ATTENTION

Damage to the seat seal or seat contour

- When installing the actuator, the valve must be in the open position.

→ For control function A pressurise the pilot air port 1 with compressed air (5 bar): Valve opens.

→ Screw actuator into the valve body. Observe tightening torque (see “Tab. 1: Conversion of actuator size”).

valvesgo.com

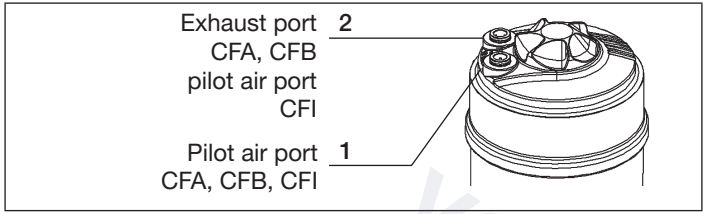

Fig. 17: Ports

DN connection (valve body)	Tightening torque for body connection [Nm]
15	45 ± 3
20	50 ± 3
25	60 ± 3
32	65 ± 3
40	
50	70 ± 3
65	100 ± 3
80	120 ± 5
100	150 ± 5

Tab. 10: Tightening torques for body connection

8.3.3 Install control unit

For a description see chapter "Installation" in the operating instructions for the corresponding control unit.

8.3.4 Turning actuator

The position of the ports can be seamlessly aligned by turning the actuator 360°.

ATTENTION

Damage to the seat seal or seat contour.

- When turning the actuator, the valve must be in the open position.

→ Clamp valve body in a collet (only for valves which have not yet been installed).

→ For control function A pressurise the pilot air port 1 with compressed air (5 bar): Valve opens.

→ Place on the body connection with a suitable open-end wrench.

→ Place a suitable open-end wrench to the hexagon of the actuator bottom (actuator size 225).

WARNING

Risk of injury from discharge of pressure and escaping medium.

The body connection can loosen when rotated incorrectly.

- Only turn the actuator **in the specified direction**.

→ Move the actuator into the required position by **turning it counterclockwise** (seen from below).

valvesgo.com

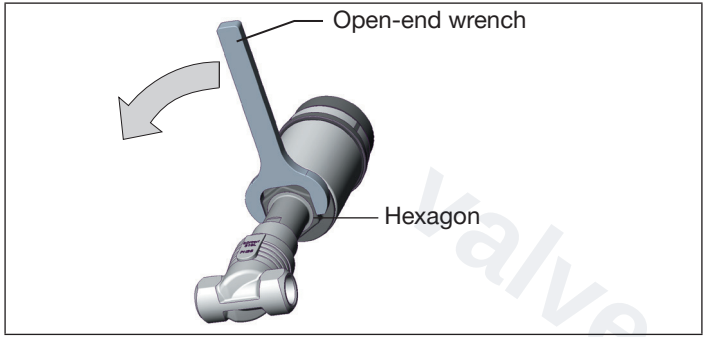

Fig. 18: Turning actuator

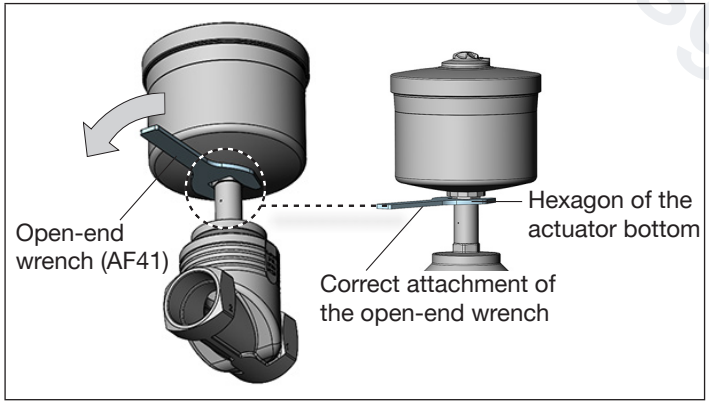

Fig. 19: Turning actuator for actuator size 225

8.4 Attaching a sensor or fitting to the relief bore

The optional variant (V-Code NA99) for leak detection and discharge allows for the connection of a sensor or a fitting to the relief bore.

ATTENTION

Damage caused by operating medium in the actuator.

Do not attach any closed vessels to the relief bore.

When attaching anything to the relief bore, ensure that there is no back pressure that could hinder the flow of the leakage. Otherwise there is a risk of operating medium entering the actuator and causing permanent damage to it.

ATTENTION

Risk of failure due to damage to the actuator.

Operating medium that has entered the actuator can weaken it to such an extent that the actuator fails during normal operation.

Sensors and fittings with M5 threads can be used with the M4 variant with the help of the included adapter.

The circlip serves as a stop to prevent the item being screwed in too far.

Always seal the thread when screwing in, e.g. with PTFE tape or thread sealant.

valvesgo.com

Note the wall thickness:

- M4 variant: 2.3 mm
- M5 variant: 3.5 mm

If no adapter is used, ensure that the screwed-in threaded pin of the component used does not exceed the following dimensions.

Actuator size	Description	DN	Thread of relief bore	Incl. enclosed adapter
50	D	20/25	M4x0.35	M5x0.8
70	M	20/25	M4x0.35	M5x0.8
90	N	20/25	M5x0.8	-

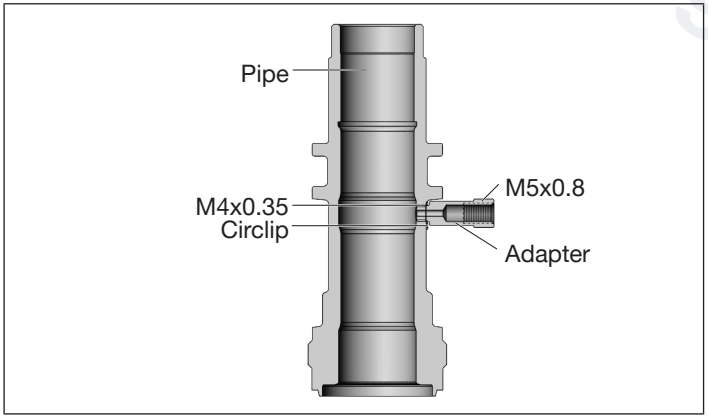

Fig. 20: Adapter for relief bore

8.5 Connect device pneumatically

DANGER

Risk of injury from high pressure in the system.

- ▸ Before loosening lines and valves, turn off the pressure and vent the lines.

WARNING

Risk of injury due to unsuitable connection hoses.

Hoses that cannot withstand the pressure and temperature range can cause hazardous situations.

- ▸ Only use hoses that are permitted for the specified pressure and temperature range.
- ▸ Note the data sheet information from the hose manufacturers.

For control function I – risk of pilot pressure failure.

With control function I, the control unit and reset are pneumatic. No defined position is reached during a pressure failure.

- ▸ To ensure a controlled restart of the device, first apply pilot pressure and then activate the medium.

8.5.1 Connecting the control medium

If the position of the pilot air ports is unfavorable for installing the hoses, these can be seamlessly aligned by rotating the actuator by 360°.

The procedure is described in chapter “8.3.3 Install control unit”.

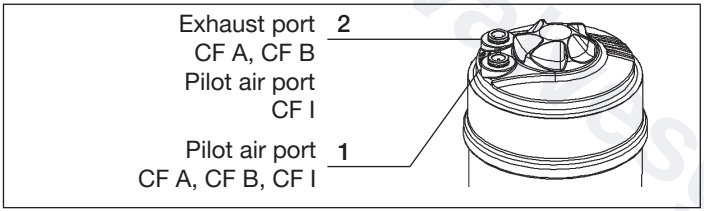

Fig. 21: Ports

Control function A and B:

→ Connect control medium to pilot air port **1** of the actuator (see “Fig. 21”).

Silencer

For devices with push-in connection, the silencer to reduce the exhaust air volume is supplied unattached.

→ Connect the silencer to the free exhaust port **2** (see “Fig. 21”).

For usage in an aggressive environment, we recommend using a pneumatic hose to drain all free pneumatic ports in a neutral atmosphere.

Control function I:

→ Connect control medium to pilot air port **1** and **2** of the actuator (see “Fig. 17: Ports”)
Pressure on pilot air port 1 opens the valve.
Pressure on pilot air port 2 closes the valve.

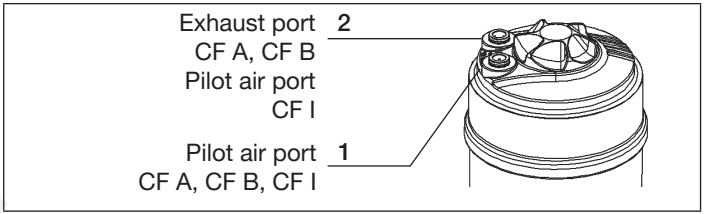

Fig. 22: Ports

Pilot air hose:

Pilot air hoses of sizes 6/4 mm or ¼" can be used.

Optionally a pilot air port via G ⅛ thread is possible.

8.6 Start-up

Perform the Teach function after installing the device. This function presets the closed-loop control parameters.

For a description, please refer to the operating instructions of the control unit.

valvesgo.com

8.7 Disassembly

DANGER

Risk of injury from discharge of pressure and escaping medium.

Dismantling a device which is under pressure is hazardous due to a sudden discharge of pressure or escaping medium.

- ▸ Before disassembly, shut off the pressure and vent all lines.

→ Disconnect the pneumatic connection.

→ Disassemble the device.

9 ELECTRICAL CONTROL UNIT

The Type 2101 valve can be combined with the following control units:

- Type 8690 Pneumatic control unit
- Type 8691 Control head (actuator size ⌀ 70–⌀ 225)
- Type 8695 Control head (actuator size ⌀ 50)
- Type 8645 Automation system FreeLINE
- Type 6012 Pilot valve
- Type 6014 P Pilot valve

The electrical port of the pilot valve or the control units is described in the respective operating instructions of the pilot valve/control unit.

10 MAINTENANCE, CLEANING

DANGER

Risk of injury from high pressure in the system.

- ▸ Before loosening lines and valves, turn off the pressure and vent the lines.

Risk of injury from electric shock.

- ▸ Before reaching into the system, switch off the power supply and secure against reactivation.
- ▸ Observe the applicable accident prevention and safety regulations for electrical devices.

WARNING

Risk of injury due to improper maintenance work.

- ▸ Maintenance may be carried out by authorised technicians only!
- ▸ Use an open-end wrench, never a pipe wrench, to screw the valve body or actuator in or out, and observe the tightening torque.

Risk of injury due to unintentional activation of the system and uncontrolled restart.

- ▸ Secure the system against unintentional activation.
- ▸ Following maintenance, ensure a controlled restart.

valvesgo.com

WARNING

For control function I – risk of pilot pressure failure.

With control function I, the control unit and reset are pneumatic. No defined position is reached during a pressure failure.

- ▸ To ensure a controlled restart of the device, first apply pilot pressure and then activate the medium.

Risk of injury due to moving parts in the device.

- ▸ Do not reach into openings.

10.1 Maintenance work

Actuator:

When used in accordance with these operating instructions, the actuator of the globe valve is maintenance-free.

Wearing parts of the globe valve:

Parts which are subject to natural wear are:

- Seals
- Swivel plate

→ If there is a leak, replace the respective wearing part with a corresponding spare part. (For spare part sets and assembly tools see chapter “12 Spare parts”).

Replacement of the wearing parts is described in chapter “12 Spare parts”.

Visual inspection:

According to the usage conditions, perform regular visual inspections:

→ Check medium ports for tightness.

→ Check relief bore on the pipe for leaks.

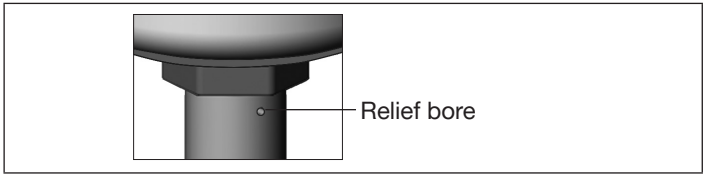

Fig. 23: Relief bore

10.1.1 Cleaning

Commercially available cleaning agents can be used to clean the outside.

ATTENTION

Avoid causing damage with cleaning agents.

- ▸ Before cleaning, check that the cleaning agents are compatible with body materials and seals.

valvesgo.com

10.2 Replacing wearing parts

10.2.1 Replacing the valve seat

The valve set consists of

- swivel plate with seal
- pin
- seal

To change the valve set, first remove the actuator from the valve body.

DANGER

Risk of injury from discharge of pressure and escaping medium.

Dismantling a device which is under pressure is hazardous due to a sudden discharge of pressure or escaping medium.

▸ Before disassembly, shut off the pressure and vent all lines.

WARNING

Risk of injury due to using wrong tool.

Performing installation work, using unsuitable tools, is hazardous due to possible damage to the device.

▸ To remove the actuator from the valve body, use an open-end wrench, never a pipe wrench.

Remove actuator from the valve body:

→ Clamp valve body in a collet (only for valves which have not yet been installed).

ATTENTION

Damage to the seat seal or seat contour.

▸ When removing the actuator, the valve must be in the open position.

→ For control function A and I pressurise the pilot air port 1 with compressed air (5 bar): Valve opens.

→ Place on the body connection with a suitable open-end wrench.

→ Unscrew actuator from the valve body.

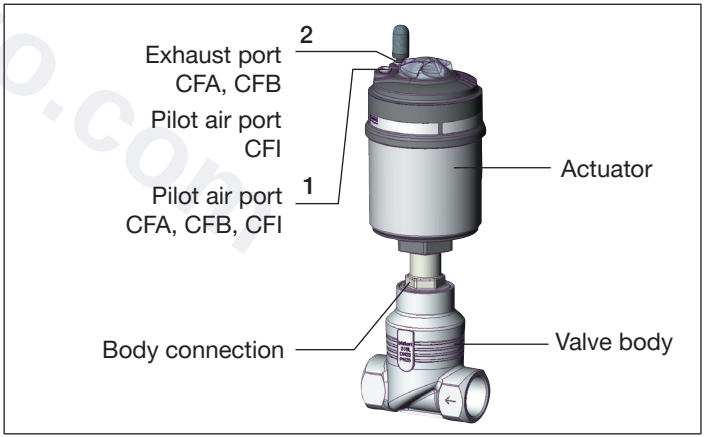

Fig. 24: Part designation

valvesgo.com

Replacing valve set

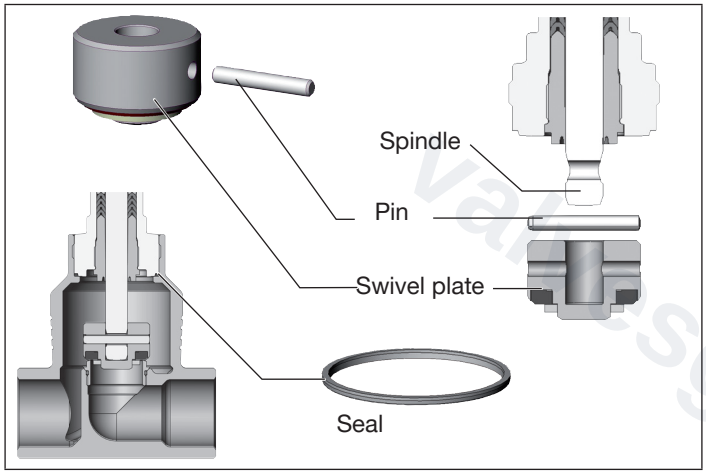

Fig. 25: Valve set

→ Support swivel plate on the cylindrical part using a prism or something similar.

→ Knock out pin using a suitable pin punch.
Pin punch ø 3 mm, for 10 mm spindle diameter on the swivel plate.
Pin punch ø 5 mm, for 14 mm spindle diameter on the swivel plate.
Pin punch ø 7 mm, for 22 mm spindle diameter on the swivel plate.

→ Remove swivel plate.

→ Connect new swivel plate to the spindle.

→ Align boreholes in the swivel plate and spindle.

→ Support swivel plate on the cylindrical part using a prism or something similar.

→ Insert pin into the borehole.

→ Caulk pin boreholes on both sides of the swivel plate using a chisel or centre punch.

Installing actuator on valve body

→ Replace the seal if necessary.

WARNING

Risk due to incorrect lubricants.

Unsuitable lubricant may contaminate the medium. There is a risk of explosion in oxygen applications!

▸ For specific applications, e.g. oxygen or analysis applications, use approved lubricants only.

→ Grease the external thread of the body connection (e.g. using Klüberpaste UH1 96-402 from Klüber).

valvesgo.com

ATTENTION

Damage to the seat seal or seat contour.

- When installing the actuator, the valve must be in the open position.

→ For control function A and I pressurise the pilot air port 1 with compressed air (5 bar): Valve opens.

→ Screw actuator into the valve body. Observe tightening torque (see "Tab. 10: Tightening torques for body connection").

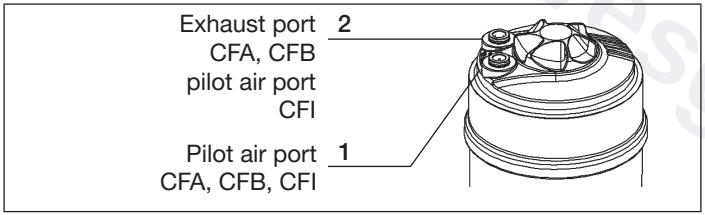

Fig. 26: Ports

DN connection (valve body)	Tightening torque for body connection [Nm]
15	45 ± 3
20	50 ± 3
25	60 ± 3
32	65 ± 3
40	
50	70 ± 3
65	100 ± 3
80	120 ± 5
100	150 ± 5

Tab. 11: Tightening torques for body connection

If the position of the pilot air ports is unfavourable for installing the hoses, these can be seamlessly aligned by rotating the actuator by 360°.

The procedure is described in chapter "8.3.3 Install control unit".

valvesgo.com

10.2.2 Replacing the valve seat set

The actuator must be uninstalled when replacing the valve seat.
The necessary steps are described in chapter “10.2.1 Replacing the valve seat” .

The valve seat set consists of

- valve seat
- seal
- O-ring (depending on variant)
- lubricant

DANGER

Risk of injury from discharge of pressure and escaping medium.

Dismantling a device which is under pressure is hazardous due to a sudden discharge of pressure or escaping medium.

▸ Before disassembly, shut off the pressure and vent all lines.

WARNING

Risk of injury due to improper installation.

Failure to observe the tightening torque value is dangerous due to the risk of damage to the device.

▸ Only perform the replacement with special assembly tools (for order numbers see chapter “12.2 Installation tools”).

▸ Observe tightening torque (see “Tab. 12” and “Tab. 13”).

→ Replace the valve seat as described below when the actuator is removed.

Replacing valve seat

→ Use the assembly tool (with suitable tool attachment) and a wrench to unscrew the old valve seat.

→ Clean the body thread and seal surface with compressed air.

→ Attach a new valve seat to the assembly tool.

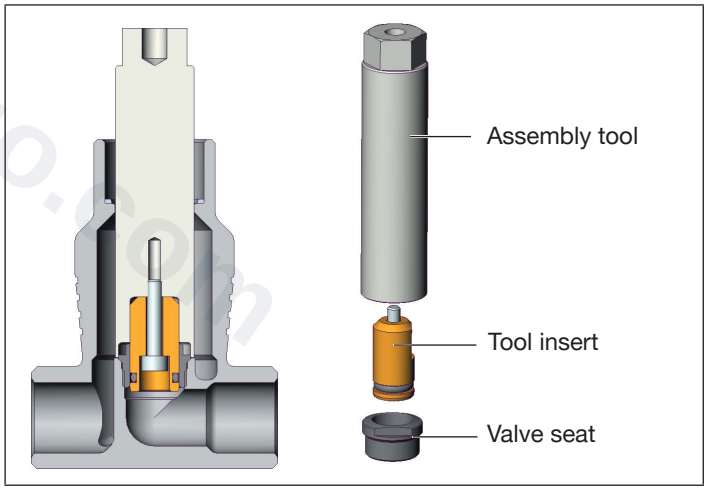

Fig. 27: Replacing the valve seat

valvesgo.com

WARNING

Danger due to incorrect lubricants.

Unsuitable lubricant may contaminate the medium. There is a risk of explosion in oxygen applications.

- For specific applications, e.g. oxygen or analysis applications, use approved lubricants only.

→ Grease the valve seat thread using a lubricant (e.g. Klüberpaste UH1 96-402 from Klüber).

→ Manually screw attached valve seat into the body thread.

→ Tighten valve seat using torque wrench. Observe tightening torque (see "Tab. 12").

Valve seat size	Tightening torque [Nm]
	Coated valve seat
15	20 ± 3
20	28 ± 3
25	40 ± 5
32	65 ± 5
40	85 ± 8
50	120 ± 8
65	150 + 10
80	180 + 10
100	220 + 10

Tab. 12: Tightening torques valve seat assembly

Install actuator (with control unit) on the valve body

→ Replace the seal if necessary.

WARNING

Danger due to incorrect lubricants.

Unsuitable lubricant may contaminate the medium. There is a risk of explosion in oxygen applications.

- For specific applications, e.g. oxygen or analysis applications, use approved lubricants only.

→ Grease the external thread of the body connection (e.g. using Klüberpaste UH1 96-402 from Klüber).

ATTENTION

Damage to the valve seat seal or seat contour.

- When installing the actuator, the valve must be in the open position.

→ For **control function A and I**
Without control unit: Pressurise pilot air port 1 with compressed air (5 bar). Valve opens.
With control unit: Open the valve in accordance with the operating instructions of the control unit.

→ Screw actuator into the valve body. Observe tightening torque (see"Tab. 13").

valvesgo.com

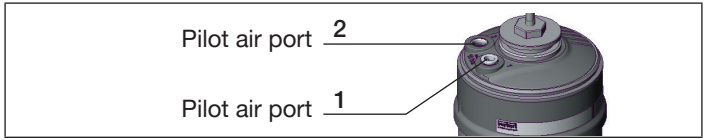

Fig. 28: Ports

DN connection (valve body)	Tightening torque for body connection [Nm]
15	45 ± 3
20	50 ± 3
25	60 ± 3
32	65 ± 3
40	
50	70 ± 3
65	100 ± 3
80	120 ± 5
100	150 ± 5

Tab. 13: Tightening torques for body connection

If the position of the pilot air ports is unfavourable for installing the hoses, these can be seamlessly aligned by rotating the actuator by 360°.

The procedure is described in chapter “8.3.4 Turning actuator” on page 21 .

10.2.3 Replacing the packing gland

For device combination ø 70/DN50, replacing the packing gland will be possible as of series-production status January 2017.

The seal set for the packing gland includes

SP10/SP14 • 1 support ring • 7 chevron seals • 2 thrust collars • 1 compression spring • 1 spindle guide • 1 seal • lubricant	
SP22 • 1 support ring • 7 chevron seals • 2 thrust collars • 1 compression spring • 1 spacer • 1 seal • lubricant	

Tab. 14: Seal set for packing gland

valvesgo.com

DANGER

Risk of injury from discharge of pressure and escaping medium.

Dismantling a device which is under pressure is hazardous due to a sudden discharge of pressure or escaping medium.

- Before disassembly, shut off the pressure and vent all lines.

WARNING

Risk of injury due to using wrong tool.

Performing installation work, using unsuitable tools, is hazardous due to possible damage to the device.

- To remove the actuator from the valve body, use an open-end wrench, never a pipe wrench.
- To replace the packing gland, use special installation wrench, modified socket wrench or open-end wrench.
- Observe tightening torques.

To replace the packing gland, first remove the actuator from the valve body and remove the swivel plate.

Removing actuator from the valve body

→ Clamp valve body in a collet (only for valves which have not yet been installed).

ATTENTION

Damage to the seat seal or seat contour.

- When removing the actuator, the valve must be in the open position.

→ For control function A and I pressurise the pilot air port 1 with compressed air (5 bar): Valve opens.

→ Place on the body connection with a suitable open-end wrench.

→ Unscrew actuator from the valve body.

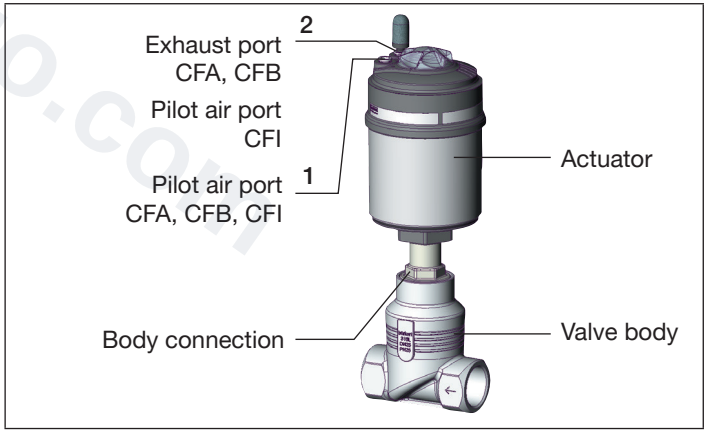

Fig. 29: Part designation

Removing swivel plate

→ Knock out pin using a suitable pin punch.
Pin punch ø 3 mm, for 10 mm spindle diameter on the swivel plate.
Pin punch ø 5 mm, for 14 mm spindle diameter on the swivel plate.
Pin punch ø 7 mm, for 22 mm spindle diameter on the swivel plate.

→ Remove swivel plate.

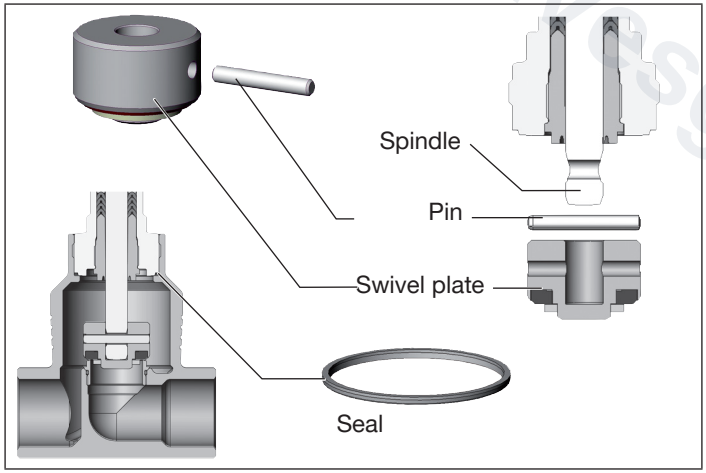

Fig. 30: Valve set

Replacing packing gland

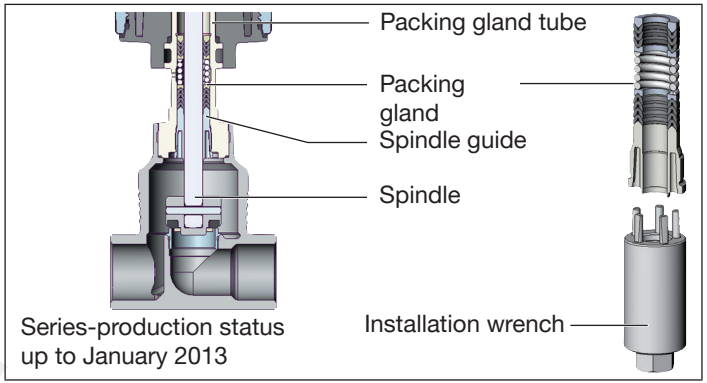

Fig. 31: Changing packing gland (series-production status up to January 2013)

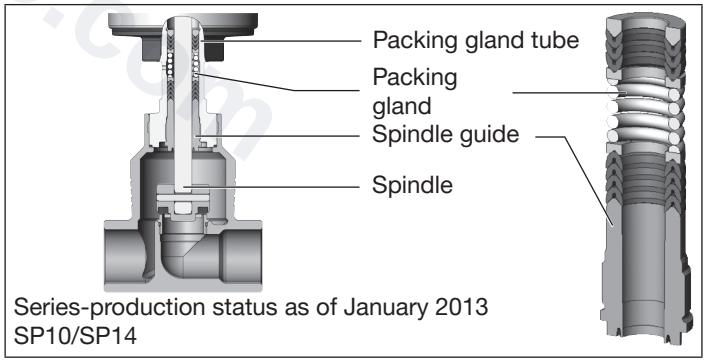

valvesgo.com

Fig. 32: Changing packing gland SP10/SP14 (series-production status as of January 2013)

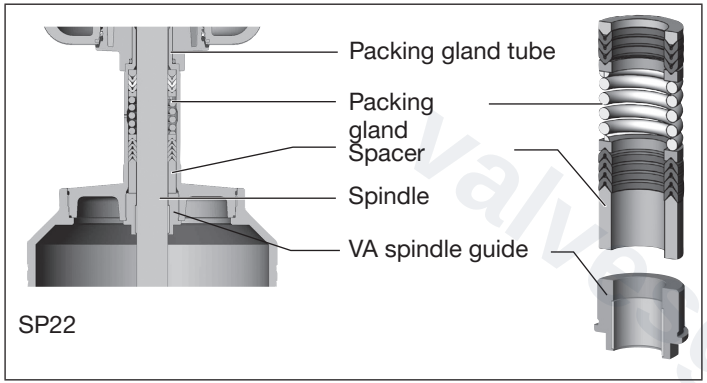

Fig. 33: Replacing the packing gland SP22

Series-production status up to January 2013:

→ Unscrew spindle guide using the installation wrench[9] and an open-end wrench.

Series-production status as of January 2013 SP10/SP14:

→ Unscrew spindle guide using a modified socket wrench[9].

SP22:

→ Unscrew VA spindle guide using an open-end wrench.

9) *The assembly wrench or modified socket wrench are available from your Bürkert sales department.*

WARNING

Risk of injury due to parts being ejected.

When the spindle opening is exposed, the individual parts of the packing gland will be pressed out at an undefined speed when the pilot air port is pressurised.

- Before pressurising with pilot air, safeguard the area around the outlet, (e.g. place spindle on a firm surface).

→ For **control function A and I** pressurise the pilot air port **1** with 6–8 bar (see "Fig. 29: Part designation").

→ For **control function B** pressurise the pilot air port **2** with 6–8 bar (see "Fig. 29: Part designation").

→ Grease the individual parts of the new packing gland with the supplied lubricant.

→ Place individual parts on the spindle in the specified direction and sequence (as shown in "Fig. 34: Seal set for packing gland").

→ Push the packing gland into the packing gland tube.

→ Screw in spindle guide/VA spindle guide again using the socket wrench/open-end wrench. Observe tightening torque (see "Tab. 15: Tightening torques spindle guide")!

valvesgo.com

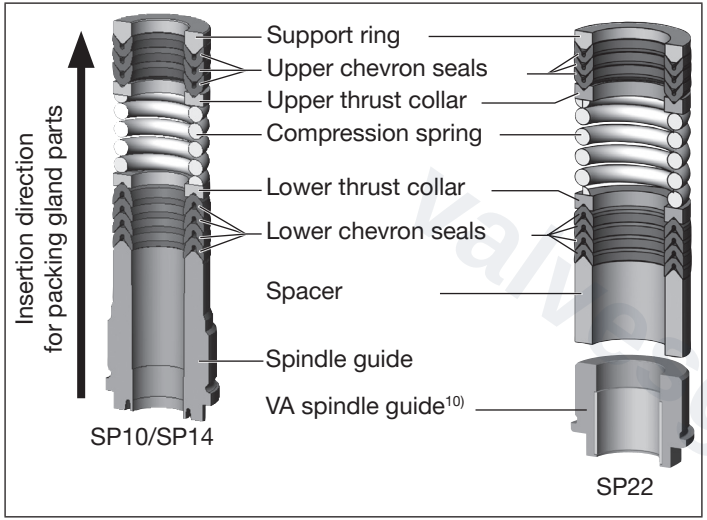

Fig. 34: Seal set for packing gland

Tightening torques spindle guide	
Spindle diameter	**Tightening torque [Nm]**
10 mm	6
14 mm	15
22 mm	60

Tab. 15: Tightening torques spindle guide

10) *Is not included in the seal set.*

Installing swivel plate

→ Connect swivel plate to the spindle.

→ Align boreholes in the swivel plate and spindle.

→ Support swivel plate on the cylindrical part using a prism or something similar.

→ Insert pin into the borehole.

→ Caulk pin boreholes on both sides of the swivel plate using a chisel or centre punch.

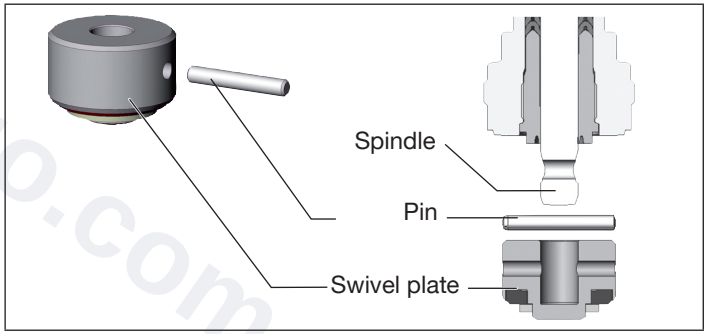

Fig. 35: Swivel plate

Installing actuator on valve body

For a description see

"Installing actuator on valve body" on page 28.

valvesgo.com

11 FAULTS

Fault	Elimination
Actuator does not switch	Pilot air port interchanged[11)] CFA → Connect pilot air port 1 CFB → Connect pilot air port 1 CFI → Pilot air port 1: open Pilot air port 2: closing
	Pilot pressure too low → Observe pressure specifications on the type label
	Operating pressure too high → Observe pressure specifications on the type label
	Flow direction interchanged → Observe direction of arrow on the type label
Valve is not tight	Dirt between seal and valve seat → Install dirt trap
	Valve seat seal worn → Install new swivel plate
	Flow direction interchanged → Observe direction of arrow on the type label
	Operating pressure too high → Observe pressure specifications on the type label
	Pilot pressure too low → Observe pressure specifications on the type label
Valve is leaking on the relief bore	Packing gland worn → Replace packing gland or actuator

11) *see "8.5 Connect device pneumatically"*

valvesgo.com

12 SPARE PARTS

WARNING

Risk of injury when opening the actuator.

The actuator contains a spring under tension. The spring that ejects when the actuator opens may cause injuries.

▸ The actuator must not be opened.

CAUTION

Risk of injury and/or damage due to incorrect parts.

Incorrect accessories and unsuitable spare parts may cause injuries and damage the device and the area around it.

▸ Use only original accessories and original spare parts from Bürkert.

12.1 Replacement part set

The following replacement part sets are available for the globe valve Type 2101:

- **Valve set,** consists of swivel plate with seal, pin and seal.
- **Seal set for packing gland,** consisting of the individual parts of the packing gland, seal and lubricant (the modified socket wrench is not included in the seal set).
- **Valve seat set,** consists of valve seat, O-ring (depending on variant) and seal.

Valve set (PTFE seal)	
Orifice DN	Order number
15	149 606
20	011 171
25	160 737
32	011 208
40	011 209
50	216 431
50 (actuator size ø 70)[12)]	307 392
65	241 777
65 (actuator size ø 225)	155 491
80	155 492
100	155 493

Tab. 16: Valve set (PTFE seal)

valvesgo.com

Seal set for packing gland				
Body DN	Actuator size	Order number Standard variant	Order number Water outlet (up to 200 °C)	Order number high-temperature outlet (up to 230 °C)
15–50[12)]	ø 50	216 433	372 661	372 662
	ø 70			
32–65	ø 90	216 435	372 653	372 655
	ø 130			
80–100	ø 130	252 545	–	200 23063
65–100	ø 225	200 60377	–	200 60378

Tab. 17: Seal set for packing gland

VA spindle guide for packing gland			
Spindle ø	Orifice DN	Actuator size	Order number
22	80–100	ø 130	252 543
22	65 - 100	ø 225	252 543

Tab. 18: VA spindle guide for packing gland

Valve seat set	
Includes: valve seat, O-ring (depending on variant), seal	
Orifice DN	Order number
15	262152
20	262157
25	262170
32	262174
40	262177
50	262179
65	262204
80	262207
100	262210

Fig. 36: Valve seat set

12) *As of series-production status January 2017, switch also possible for DN50 spindle ø 10.*

valvesgo.com

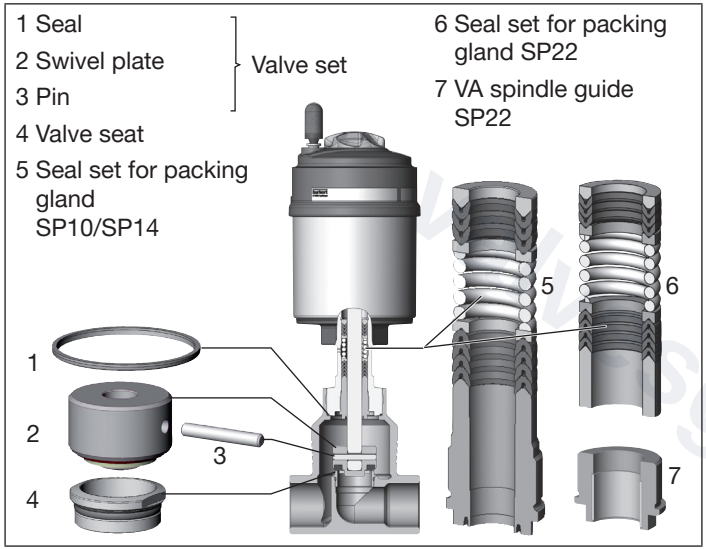

Fig. 37: Spare parts

12.2 Installation tools

Assembly key for packing gland (only for dismantling packing gland until January 2013)		
Installation wrench	**Orifice DN**	**Order number**
Spindle ø 10 mm	15–40	665 700
Spindle ø 14 mm	32–65	665 701

Tab. 19: Installation wrench

Modified socket wrench for packing gland (series-production status as of January 2013)				
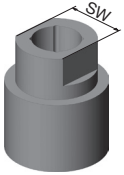	**Socket wrench**	**DN**	**AF**	**Order number**
	Spindle ø 10 mm	15–50[13)]	19	683 221
	Spindle ø 14 mm	32–65	21	683 223

13) *As of series-production status January 2017 also for DN50*

Tab. 20: Modified socket wrench

Assembly tools for replacing valve seat	
Orifice DN	**Order number**
15	652 604
20	652 605
25	652 606
32	652 607
40	652 608
50	652 609
65	655 562
80	655 563
100	655 564

Tab. 21: Assembly tool for replacing valve seat

If you have any questions, please contact your Bürkert sales department.

valvesgo.com

13 TRANSPORT, STORAGE, PACKAGING

CAUTION

Risk of injury due to heavy device.

During transportation or installation work, a heavy device may fall down and cause injuries.

- Heavy equipment must only be transported, assembled and disassembled with the help of a second person.
- Use suitable tools.

ATTENTION

Damage in transit due to inadequately protected devices.

- Protect the device against moisture and dirt in shock-resistant packaging during transportation.
- Observe permitted storage temperature.

Incorrect storage may damage the device.

- Store the device in a dry and dust-free location.
- Storage temperature: –20...+65 °C.

Environmentally friendly disposal



- Follow national regulations regarding disposal and the environment.
- Collect electrical and electronic devices separately and dispose of them as special waste.

Further information at country.burkert.com

valvesgo.com

bürkert
FLUID CONTROL SYSTEMS

valvesgo.com

country.burkert.com

valvesgo.com