bürkert
FLUID CONTROL SYSTEMS

Manually operated 2-way angle seat control valve

- Excellent control accuracy combined with high flow capacity
- Also suitable for demanding operating conditions
- Robust actuator with optional stroke limitation and locking
- Stainless steel valve body with socket, clamp or welded connection

Product variants described in the data sheet may differ from the product presentation and description.

Can be combined with

Type 2300
Pneumatically operated 2-way angle seat control valve ELEMENT

Type 3360
Electromotive 2-way angle seat control valve

Type 2920
Manually operated 2/2-way angle seat valve

Type 2961
Manually operated 2-way globe control valve

Type 8802
Continuous control valve systems ELEMENT – overview

Type 8840
Modular process valve cluster – distributor and collector

Type description

The Type 2960 control valve consists of a manual actuator and an angle seat valve body made of high-quality stainless steel. A parabolic cone enables a flow capacity that is up to 35 % higher compared to conventional control valves. The precise spindle guide enables control, even under demanding operating conditions. A soft PTFE or PEEK seal guarantees reliable sealing. The actuator is made of high-quality plastic and is suitable for use in demanding environments. It possesses a visual position indicator and can be optionally equipped with stroke limitation and locking. The packing gland uses tried-and-tested V-seals and possesses spring compensation, which means that it does not need to be pulled back manually

DTS 1000597486 EN Version: H Status: RL (released | freigegeben | valide) printed: 01.07.2026

© Christian Bürkert GmbH & Co. KG, Subject to alteration

valvesgo.com

Table of contents

1. General technical data 3

2. Approvals and conformities 4

2.1. General notes 4
2.2. Conformity 4
2.3. Standards 4
2.4. Explosion protection 4
2.5. Drinking water 4
2.6. Foods and beverages/Hygiene 5

3. Materials 6

3.1. Bürkert resistApp 6
3.2. Material specifications 6

4. Dimensions 7

4.1. Actuator 7
4.2. Body with threaded connection 8
4.3. Body with welded connection 9
4.4. Body with clamp connection 10

5. Performance specifications 11

5.1. Fluidic data 11
Flow characteristics 11
Overview of fluidic data for flow below seat (for liquids, steam and gases) 11
5.2. Operating limits 12
Operating limits for medium temperature and operating pressure 12
Operating limits seat seal 13
Operating limits for optional variants 13

6. Product design and assembly 14

6.1. Product features 14

7. Ordering information 15

7.1. Bürkert eShop 15
7.2. Bürkert product filter 15
7.3. Bürkert Product Enquiry Form 15
7.4. Ordering chart accessories 15
Standard accessories 15

DTS 1000597486 EN Version: H Status: RL (released | freigegeben | valide) printed: 01.07.2026

valvesgo.com

1. General technical data

Product properties	
Dimensions	Further information can be found in chapter "4. Dimensions" on page 7.
Material	Further information can be found in chapter "3. Materials" on page 6.
Design	Angle seat control valve
Nominal diameter	DN 10...DN 65, NPS ⅜...NPS 2½
Flow direction	Flow to open (below seat)
Performance data	
Operating pressure	0 bar(g)...25 bar(g) (see "5.1. Fluidic data" on page 11)
Nominal pressure	PN 25 (DIN EN 1333), Class 150 (DIN EN 1759)
Seat leakage	DIN EN 60534 - 4:2006 (see "5.1. Fluidic data" on page 11)
Leakage class III	Stainless steel
Leakage class VI	PTFE and PEEK
K_V value	5 m³/h...90 m³/h (see "5.1. Fluidic data" on page 11)
Operating characteristic	Modified equal percentage
Medium data	
Operating medium	Steam, water, neutral gases, alcohols, oils, fuels, hydraulic fluids, salt solutions, alkalis, organic solvents
Medium temperature	- 40 °C...+ 230 °C (see "5.2. Operating limits" on page 12)
Viscosity	Max. 600 mm²/s
Product connections	
Port connection	
Threaded connection	G (DIN ISO 228 - 1) NPT (ASME B1.20.1) RC (ISO 7 - 1)
Welded connection	DIN EN ISO 1127 / ISO 4200 / DIN 11866 series B DIN 11850 - 2 / DIN 11866 series A ASME BPE / DIN 11866 series C SMS 3008
Clamp connection	DIN 32676 series B (pipe: ISO 4200) DIN 32676 series A (pipe: DIN 11850 - 2) ASME BPE
Approvals and conformities	
Further information can be found in chapter "2. Approvals and conformities" on page 4.	
Environment and installation	
Ambient temperature	- 10 °C...+ 60 °C
Installation position	As required, preferably with actuator upright

DTS 1000597486 EN Version: H Status: RL (released | freigegeben | valide) printed: 01.07.2026

valvesgo.com

2. Approvals and conformities

2.1. General notes

- The approvals and conformities listed below must be stated when making enquiries. This is the only way to ensure that the product complies with all required specifications.
- Not all available variants can be supplied with the below mentioned approvals or conformities.

2.2. Conformity

In accordance with the Declaration of Conformity, the product is compliant with the EU Directives. This includes the following directives:

- Pressure Equipment Directive 2014/68/EU

2.3. Standards

The applied standards which are used to demonstrate compliance with the EU Directives are listed in the EU-Type Examination Certificate and/or the EU Declaration of Conformity.

2.4. Explosion protection

Approval	Description
	Optional: Explosion protection (valid for the variable code PX51) As a category 2 device suitable for zone 1/21 and zone 2/22. **ATEX:** EPS 18 ATEX 2 008 X II 2G Ex h IIC T4...T2 Gb II 2D Ex h IIIC T135 °C...T300 °C Db **IECEx:** IECEx EPS 18.0007X Ex h IIC T4...T2 Gb Ex h IIIC T135 °C...T300 °C Db

Temperature class	T2	T3	T4
Maximum surface temperature	+ 300 °C	+ 200 °C	+ 135 °C
Ambient temperature	- 40 °C...+ 130 °C	- 40 °C...+ 130 °C	- 40 °C...+ 100 °C
Maximum medium temperature	+ 285 °C	+ 185 °C	+ 125 °C

Note: The ambient and medium temperature range may be limited by non-ex-relevant specifications. Observe the Operating Instructions.

2.5. Drinking water

Conformity	Description
H_2O	**Suitable for use in drinking water applications** The materials comply with the assessment principles (UBA) for materials in contact with drinking water (TrinkwasserV). **Stainless steel body** PF39: Suitable for products with medium temperature up to 85 °C (hot water)

DTS 1000597486 EN Version: H Status: RL (released | freigegeben | valide) printed: 01.07.2026

valvesgo.com

2.6. Foods and beverages/Hygiene

Conformity	Description
FDA	**FDA – Code of Federal Regulations (valid for the variable code PL02)** All wetted materials are compliant with the Code of Federal Regulations published by the FDA (Food and Drug Administration, USA) according to the manufacturer's declaration.
USP	**United States Pharmacopeial Convention (USP) (valid for the variable code PL04)** All wetted materials are biocompatible according to the manufacturer's declaration.
	EC Regulation 1935/2004 of the European Parliament and of the Council (valid for the variable code PL01, PL02) All wetted materials are compliant with EC Regulation 1935/2004/EC according to the manufacturer's declaration.
	China food GB Standards of the People's Republic of China (valid for the variable code PL10) All wetted materials are compliant with the requirement of China food GB Standards according to the manufacturer's declaration.

DTS 1000597486 EN Version: H Status: RL (released | freigegeben | valide) printed: 01.07.2026

valvesgo.com

valvesgo.com

3. Materials

3.1. Bürkert resistApp

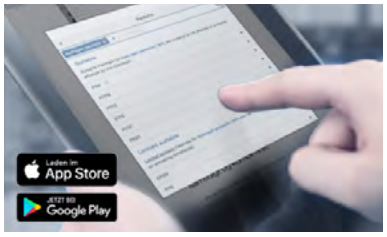

Bürkert resistApp – Chemical resistance chart

You want to ensure the reliability and durability of the materials in your individual application case? Verify your combination of media and materials on our website or in our resistApp.

Start chemical resistance check

3.2. Material specifications

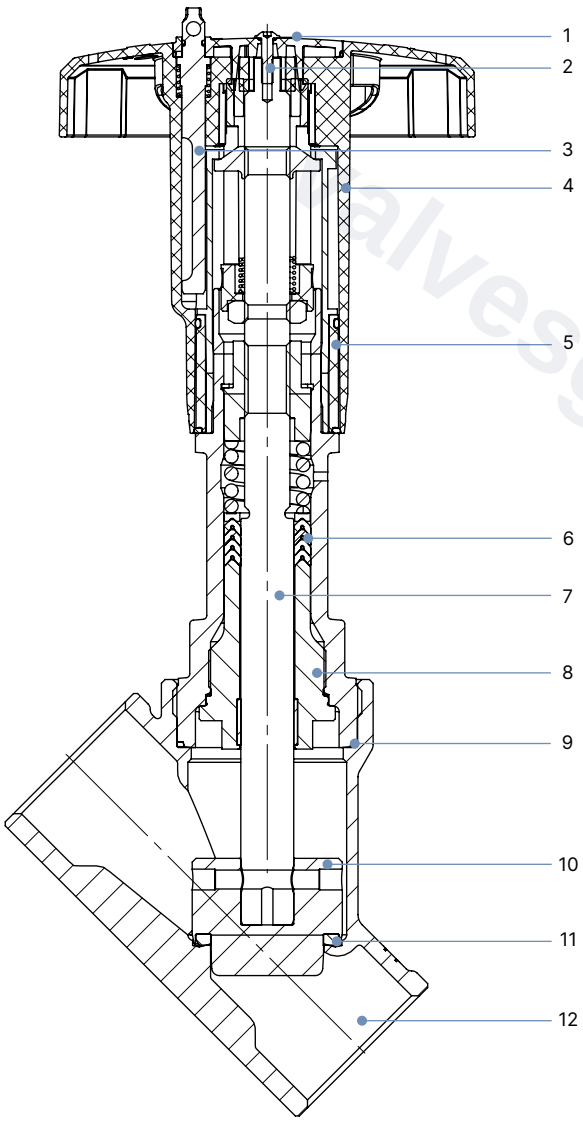

No.	Element	Material
1	Cover	Polyamide (PA)
2	Screw	Stainless steel 1.4301
3	Lock pin	Stainless steel 1.4305
4	Handwheel	Polyphenylene sulfide (PPS)
5	Optical position indicator with scale	Polyamide (PA)
6	Packing gland	PTFE V-rings (filled), with spring compensation
7	Spindle	Stainless steel 1.4401 or 1.4404
8	Spindle guide	Stainless steel 1.4404 (316L), PTFE filled
9	Body seal	Graphite
10	Control cone	1.4571 (optionally hardened)
11	Seat seal (optional)	PTFE or PEEK
12	Valve body	Stainless steel 316L/CF3M

DTS 1000597486 EN Version: H Status: RL (released | freigegeben | valide) printed: 01.07.2026

valvesgo.com

4. Dimensions

4.1. Actuator

Note:
Dimensions in mm, unless otherwise stated

Handwheel diameter 45 mm (S)	Handwheel diameter 110 mm (M) and 160 mm (L)
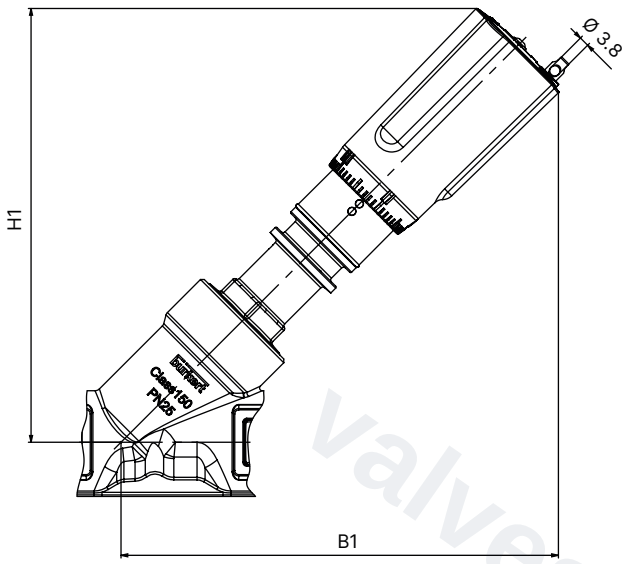	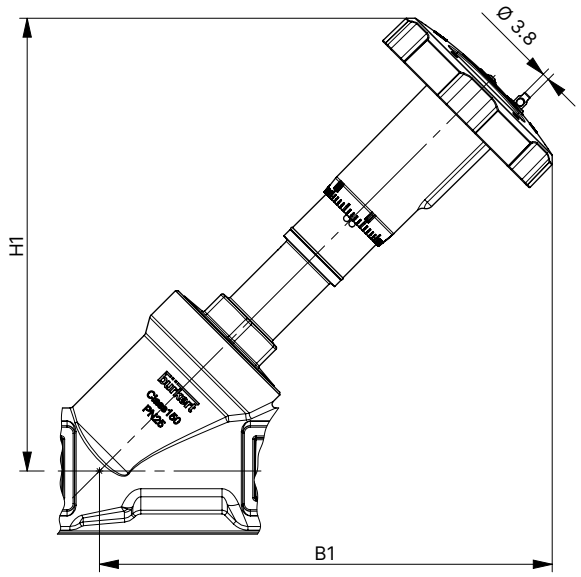

Nominal connection size (pipe)		Handwheel diameter Ø	B1 1.)	H1 1.)
DN	NPS	[mm]		
15	½	45 (S)	148	148
20	¾	45 (S)	154	154
25	1	45 (S)	163	163
32	1¼	110 (M)	224	224
40	1½	110 (M)	224	224
50	2	110 (M)	241	241
65	2½	160 (L)	290	290

1.) The dimensions for B and H are maximum dimensions and may be up to 6 mm less, depending on the nominal diamenter and standard.

DTS 1000597486 EN Version: H Status: RL (released | freigegeben | valide) printed: 01.07.2026

valvesgo.com

4.2. Body with threaded connection

Note:
Dimensions in mm, unless otherwise stated

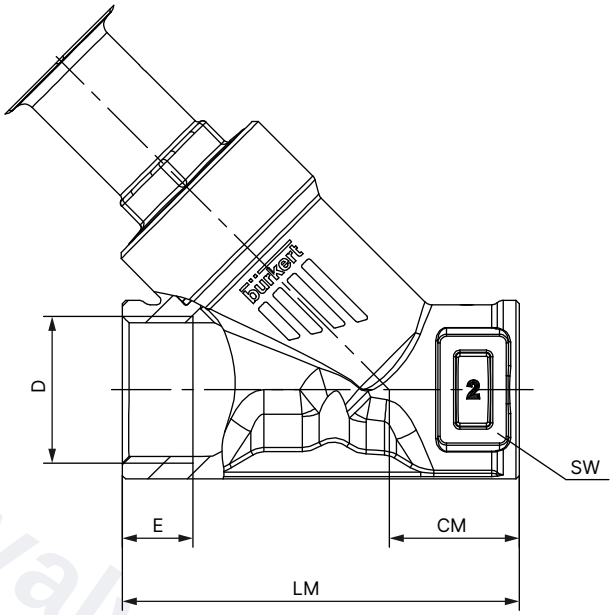

Nominal diameter (pipe)	G (DIN ISO 228 - 1), NPT (ASME B 1.20.1), Rc (ISO7 - 1)						
	D	E			CM	LM	SW
DN	NPS	[G]	[NPT]	[Rc]			
15	½	14	13.7	13.2	24	65	27
20	¾	16	14.0	14.5	27	75	34
25	1	18	16.8	16.8	29.5	90	41
32	1¼	16	17.3	19.1	36	110	50
40	1½	18	17.3	19.1	35	120	55
50	2	24	17.6	23.4	45	150	70
65	2½	26	23.7	26.7	57	185	85

DTS 1000597486 EN Version: H Status: RL (released | freigegeben | valide) printed: 01.07.2026

valvesgo.com

4.3. Body with welded connection

Note:
Dimensions in mm, unless otherwise stated

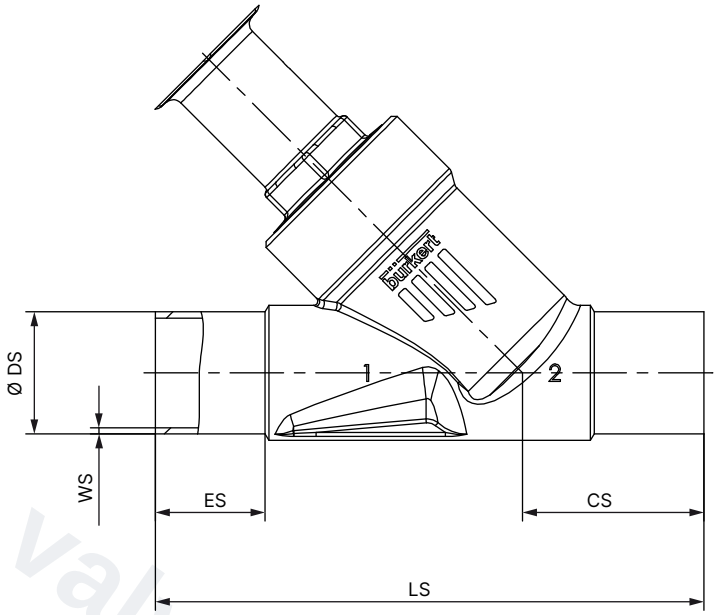

Nominal diameter (pipe)	DIN EN ISO 1127 ISO 4200 DIN 11866 series B					DIN 11850 - 2 DIN 11866 series A				
DN	**ES**	**CS**	**LS**	**Ø DS**	**WS**	**ES**	**CS**	**LS**	**Ø DS**	**WS**
15	19	34	100	21.3	1.6	19	34	100	19	1.5
20	20	39	115	26.9	1.6	20	39	115	23	1.5
25	26	43	130	33.7	2.0	26	43	130	29	1.5
32	26	45	145	42.4	2.0	26	45	145	35	1.5
40	26	49	160	48.3	2.0	26	49	160	41	1.5
50	26	50	175	60.3	2.0	26	50	175	53	1.5
65	26	50	210	76.1	2.3	26	50	210	70	2

Nominal diameter (pipe)	ASME BPE DIN 11866 series C				
NPS	**ES**	**CS**	**LS**	**Ø DS**	**WS**
½	30	46	135	12.7	1.65
¾	30	52	145	19.05	1.65
1	30	51	152	25.4	1.65
1½	30	60	182	38.1	1.65
2	30	64	210	50.8	1.65
2½	26	56	230	63.5	1.65

DTS 1000597486 EN Version: H Status: RL (released | freigegeben | valide) printed: 01.07.2026

valvesgo.com

4.4. Body with clamp connection

Note:
Dimensions in mm, unless otherwise stated

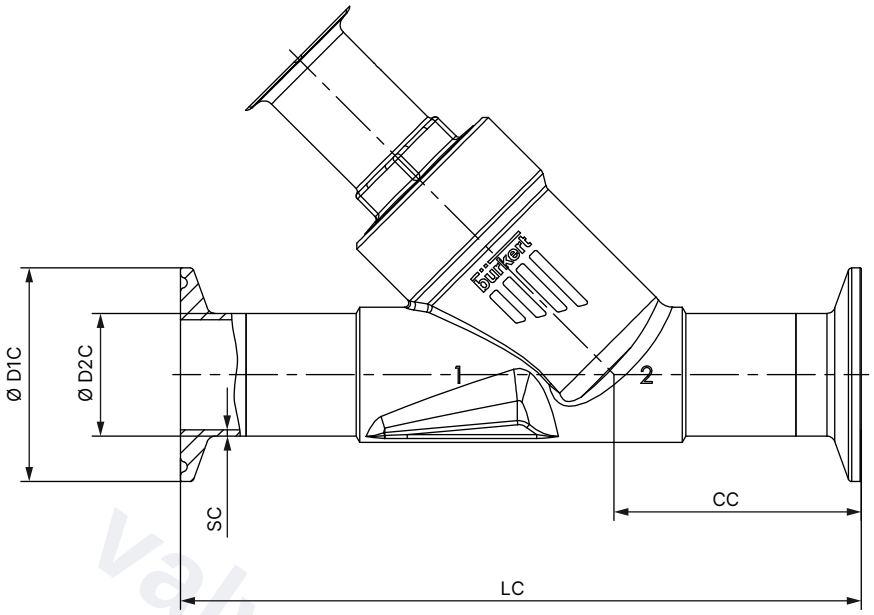

Nominal diameter (pipe)	Clamp: DIN 32676 B Pipe: DIN EN ISO 1127 ISO 4200 DIN 11866 series B					Clamp: DIN 32676 A (DN 15, similar to DIN 32676 B) Pipe: DIN 11850 - 2 DIN 11866 series A				
DN	**LC**	**CC**	**Ø D1 C**	**Ø D2 C**	**SC**	**LC**	**CC**	**Ø D1 C**	**Ø D2 C**	**SC**
15	156	49.0	50.5	21.3	1.6	130	49.5	34.0	19	1.5
20	150	56.5	50.5	26.9	1.6	150	57.0	34.0	23	1.5
25	160	58.0	50.5	33.7	2.0	160	58.5	50.5	29	1.5
32	200	57.5	50.5	42.4	2.0	180	58.0	50.5	35	1.5
40	200	69.0	64.0	48.3	2.0	200	69.5	50.5	41	1.5
50	230	77.5	77.5	60.3	2.6	230	78.0	64.0	53	1.5

Nominal diameter (pipe)	Clamp: ASME BPE Pipe: ASME BPE DIN 11866 series C				
NPS	**LC**	**CC**	**Ø D1 C**	**Ø D2 C**	**SC**
½	130	49.0	25.0	12.7	1.65
¾	150	56.5	25.0	19.05	1.65
1	160	58.0	50.5	25.4	1.65
1½	200	69.0	50.5	38.1	1.65
2	230	77.5	64.0	50.8	1.65

DTS 1000597486 EN Version: H Status: RL (released | freigegeben | valide) printed: 01.07.2026

valvesgo.com

5. Performance specifications

5.1. Fluidic data

Flow characteristics

Note:

- Modified equal percentage flow characteristic.
- Higher flow values compared to globe control valves

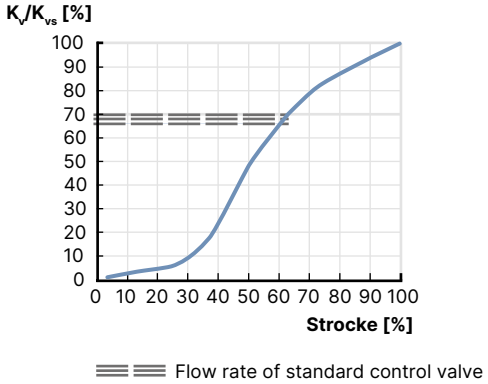

Overview of fluidic data for flow below seat (for liquids, steam and gases)

Note:

- K_v value [m³/h]: measurement with water according to DIN EN 60534 - 2 - 4
- Seat leakage according to DIN EN 60534 - 4
- See "7.2. Bürkert product filter" on page 15

Nominal diameter (pipe)		Hand-wheel diameter Ø	Operating pressure max. leakage class)			K_v value at stroke [m³/h]										K_{vs} value
			Valve seat seal													
			Stainless steel	PTFE	PEEK											
DN	NPS	[mm]	[bar(g)]	[bar(g)]	[bar(g)]	5 %	10 %	20 %	30 %	40 %	50 %	60 %	70 %	80 %	90 %	[m³/h]
ASME BPE (12.7 mm x 1.65 mm / 0.5" x 0.065")																
15	½	45 (S)	25 (III)	25 (VI)	25 (VI)	0.22	0.24	0.30	0.56	1.2	1.5	1.5	1.5	1.5	1.5	1.5
All standards																
15	½	45 (S)	25 (III)	25 (VI)	25 (VI)	0.16	0.17	0.22	0.40	1.2	2.7	3.5	4.0	4.5	4.8	5.0
20	¾	45 (S)	25 (III)	25 (VI)	25 (VI)	0.26	0.27	0.40	1.1	4.0	5.9	7.2	8.3	9.1	9.6	10.0
25	1	45 (S)	25 (III)	25 (VI)	25 (VI)	0.34	0.36	0.62	1.5	5.2	8.9	11.5	13.0	14.2	15.4	16.0
32	1 ¼	110 (M)	25 (III)	25 (VI)	25 (VI)	0.43	0.52	0.82	1.4	4.0	9.3	13.8	16.4	19.2	21.5	23.0
40	1 ½	110 (M)	25 (III)	25 (VI)	25 (VI)	0.48	0.66	1.4	5.1	14.0	20.0	24.5	28.5	31.5	34.5	36.0
50	2	110 (M)	25 (III)	25 (VI)	20 (VI)	0.87	1.2	1.8	4.0	15.2	26.0	35.0	40.5	45.0	48.0	53
65	2 ½	160 (L)	24 (15) [1.)] (III)	24 (15) [1.)] (VI)	14 (VI) [1.)]	1.7	2.0	6.5	20.0	35.0	48.0	58	67	75	83	90

1.) According to pressure equipment directive 97/23/EC for compressible fluids of group 1 (dangerous gases and vapours) according to article 3, number 1.3, letter a, first indent)

DTS 1000597486 EN Version: H Status: RL (released | freigegeben | valide) printed: 01.07.2026

valvesgo.com

5.2. Operating limits

Operating limits for medium temperature and operating pressure

In addition to the maximum operating pressures, the operating range of Bürkert process valves is limited by the nominal pressure according to the relevant standard.

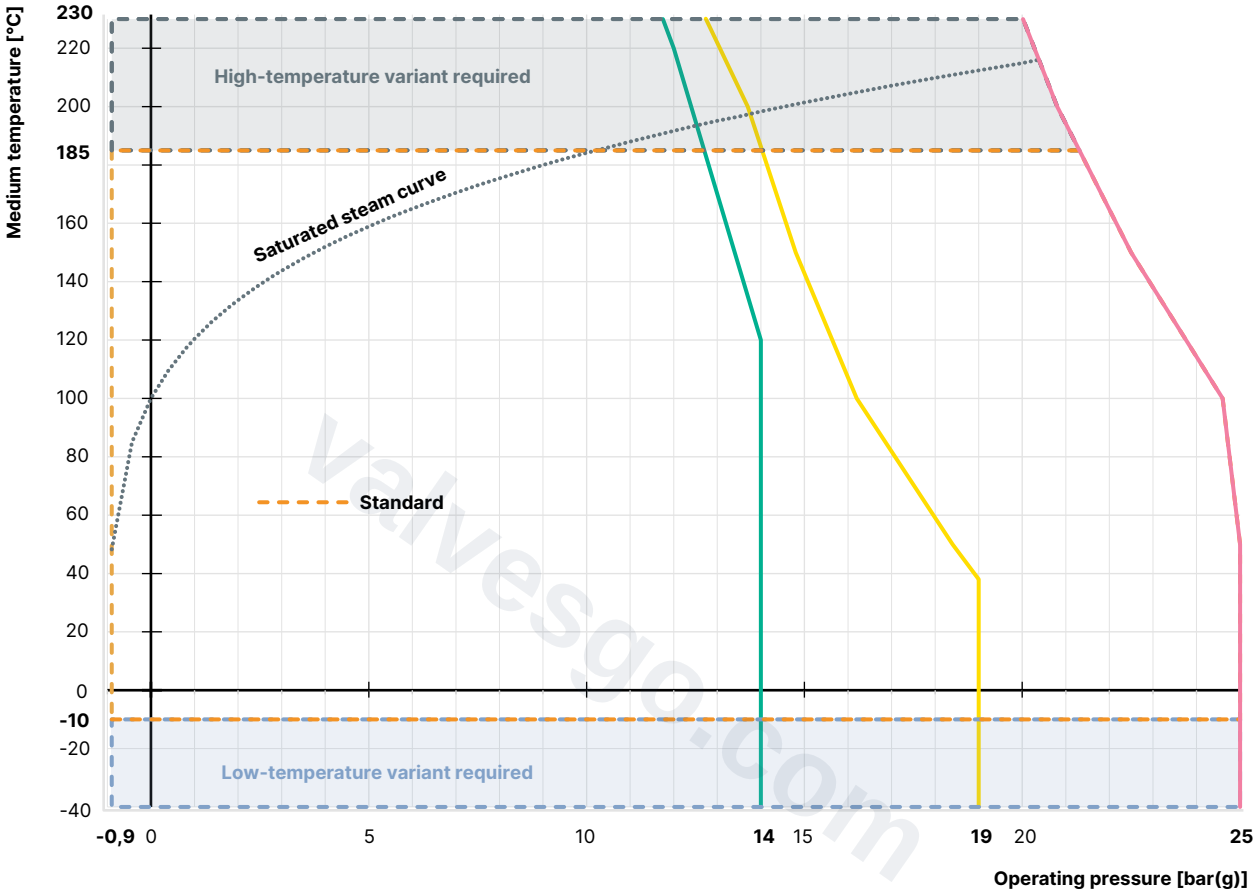

- Operating limits for PN25 according to DIN EN 12516-1
- Operating limits for flange 10K according to JIS B 2220
- Operating limits for Class 150 according to ASME B16.34
- Saturated steam curve for water

DTS 1000597486 EN Version: H Status: RL (released | freigegeben | valide) printed: 01.07.2026

valvesgo.com

Operating limits seat seal

Tight sealing required	Leakage class (DIN EN 60534 - 4)	Medium temperature	Seat seal
No An additional shut-off valve is recommended.	III (metallic sealing) Metal-sealed valves have larger leakages (0.1 % of the nominal flow rate are permissible). Metal seals are impervious even under demanding process conditions, but can wear more quickly in manually operated actuators due to the rotating spindle during closure.	- 40 °C...+ 230 °C	Stainless steel
Yes An additional shut-off valve is often unnecessary.	VI (soft seals) By using plastics as sealing material, the control valves can close tightly. Their use is not recommended in cases of increased erosion due to demanding process conditions.	- 40 °C...+ 130 °C (recommended for ≤ + 130 °C)	PTFE
		- 10 °C...230 °C (recommended for > + 130 °C)	PEEK

Operating limits for optional variants

High-temperature variant
Thanks to an adaption of the spindle sea, this variant is suitable for applications with steam, neutral gases and other heat transfer mediums up to + 230 °C.

Water variant
For applications with water up to + 200 °C, a special configuration of the packing gland increases service life significantly.It is recommended for all water applications.

Drinking water variant
The materials comply with the assessment principles (UBA) for materials in contact with drinking water up to + 85 °C.

Low-temperature variant
Suitable for minimum medium temperatures down to - 40 °C

DTS 1000597486 EN Version: H Status: RL (released | freigegeben | valide) printed: 01.07.2026

valvesgo.com

valvesgo.com

6. Product design and assembly

6.1. Product features

Note
Further information can be found in the **operating instructions Type 2960** ▶.

Position indicator	
When turning the handwheel counterclockwise, the reproducible stroke scale becomes visible between the attachment and the handwheel. The scale on the handwheel, together with the stroke scale, enables reproducible adjustment of the flow rate.	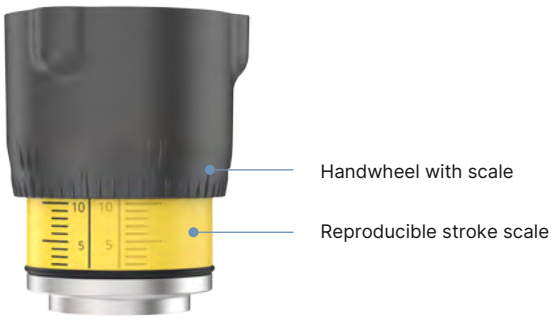
Interlock (optional)	
The valve can be secured against unintentional or unauthorized operation. For this purpose, a securing pin can be pressed down and turned. The locking pin has a hole (Ø 3.8) and can be secured with a padlock.	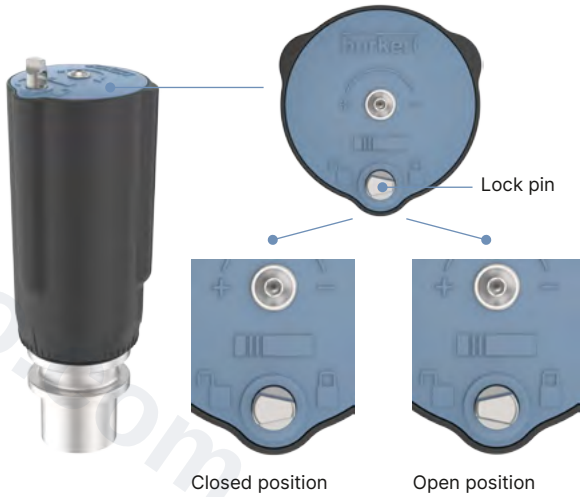
Stroke limitation (optional)	
Both the minimum and the maximum position of the valve can be adjusted via an adjustment sleeve. The handwheel can be removed for this purpose.	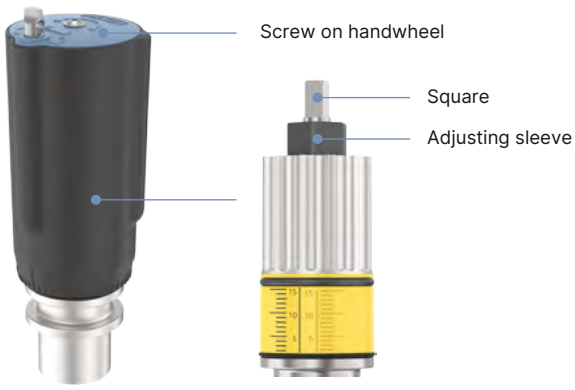

DTS 1000597486 EN Version: H Status: RL (released | freigegeben | valide) printed: 01.07.2026

valvesgo.com

7. Ordering information

7.1. Bürkert eShop

Bürkert eShop – Easy ordering and quick delivery

You want to find your desired Bürkert product or spare part quickly and order directly? Our online shop is available for you 24/7. Sign up and enjoy all the benefits.

Order online now

7.2. Bürkert product filter

Bürkert product filter – Get quickly to the right product

You want to select products comfortably based on your technical requirements?
Use the Bürkert product filter and find suitable articles for your application quickly and easily.

Try out our product filter

7.3. Bürkert Product Enquiry Form

Note:
Please see our Product Enquiry Form for a full explanation of our specification key.

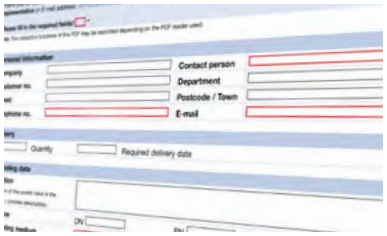

Bürkert Product Enquiry Form – Your enquiry quickly and compactly

Would you like to make a specific product enquiry based on your technical requirements? Use our Product Enquiry Form for this purpose. There you will find all the relevant information for your Bürkert contact. This will enable us to provide you with the best possible advice.

Fill out the form now

7.4. Ordering chart accessories

Standard accessories

Description	Article no.
4 Lock, 3 mm Shackle Nylon Lockout	93719475

DTS 1000597486 EN Version: H Status: RL (released | freigegeben | valide) printed: 01.07.2026

valvesgo.com