bürkert
FLUID CONTROL SYSTEMS

MAN 1000599484 EN Version: D Status: RL (released | freigegeben) printed: 13.08.2026

Type 2920-2921-2960-2961

Manually operated 2/2-way valve

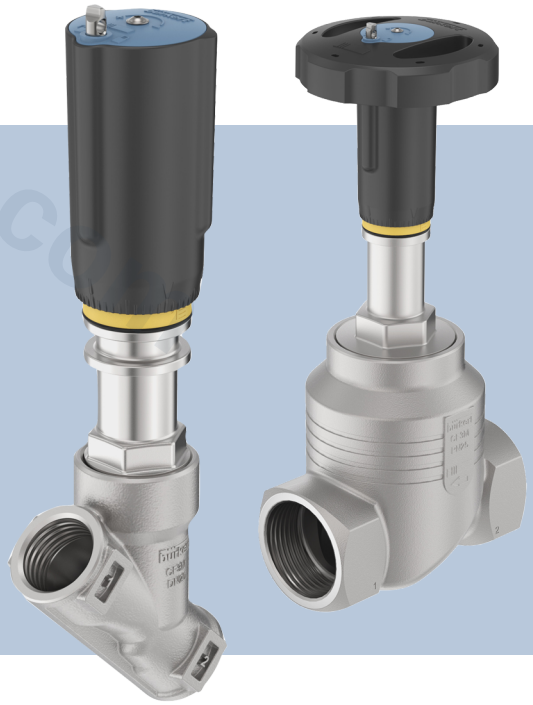

Operating Instructions

valvesgo.com

MAN 1000599484 EN Version: D Status: RL (released | freigegeben) printed: 13.08.2026

valvesgo.com

We reserve the right to make technical changes without notice.
© Bürkert Werke GmbH & Co. KG 2023-2026
Technical documentation 2607/02_GBen_00815454_735940619_36028798342787723 / Original DE

Table of contents

1 About this document 5
1.1 Symbols 5
1.2 Terms and abbreviations 6
1.3 Manufacturer 6
2 Safety 7
2.1 Intended use 7
2.2 Basic safety instructions 7
3 Product description 9
3.1 Structure and description 9
3.2 Variants 11
3.2.1 Type 2920, 2960 12
3.2.2 Type 2921, 2961 13
3.3 Function 13
3.3.1 Position indicator 14
3.3.2 Flow direction 15
3.3.3 Flow characteristic 16
3.4 Product identification 17
3.4.1 Type label 17
4 Technical data 18
4.1 Standards and directives 18
4.2 Operating conditions 18
4.2.1 Temperatures 18
4.2.2 Pressure 18
5 Installation 20
5.1 Notes for correct installation 20
5.1.1 Devices with welded connection 21
5.1.2 Devices with threaded connection 21
5.2 Installing valve body 21
5.3 Install the actuator on devices with a welded connection 21
5.4 Set stroke limit 22
5.5 Lock handwheel 23
6 Disassembly 24
7 Servicing and maintenance 25
7.1 Maintenance work 25
7.1.1 Actuator 25
7.1.2 Inspection intervals 25
7.2 Cleaning 25
7.3 Troubleshooting 26
8 Spare parts 27
8.1 Order spare parts in eShop 27
9 Logistics 28
9.1 Transport and storage 28
9.2 Return 28

MAN 1000599484 EN Version: D Status: RL (released | freigegeben) printed: 13.08.2026

valvesgo.com

valvesgo.com

9.3 Disposal 28

MAN 1000599484 EN Version: D Status: RL (released | freigegeben) printed: 13.08.2026

valvesgo.com

valvesgo.com

1 About this document

The document is an important part of the product and guides the user to safe installation and operation. The information and instructions in this document are binding for the use of the product.

- Before using the product for the first time, read and observe the whole safety chapter.
- Before starting any work on the product, read and observe the respective sections of the document.
- Keep the document available for reference and give it to the next user.
- Contact the Bürkert sales office for any questions.

Further information concerning the product at Products.

- Enter the article number from the type label in the search bar.

The illustrations in these instructions may vary depending on the product variant.

1.1 Symbols

DANGER!

Warns of a danger that leads to death or serious injuries.

WARNING!

Warns of a danger that can lead to death or serious injuries.

CAUTION!

Warns of a danger that can lead to minor injuries.

NOTICE!

Warns of property damage on the product or the installation.

Indicates important additional information, tips and recommendations.

Refers to information in this document or in other documents.

- Indicates a step to be carried out.

✓ Indicates a result.

Menu Indicates a software user-interface text.

MAN 1000599484 EN Version: D Status: RL (released | freigegeben) printed: 13.08.2026

valvesgo.com

1.2 Terms and abbreviations

The terms and abbreviations are used in this document to refer to following definitions.

Device	Process valve Type 2920 or 2921 or 2960 or 2961
Ex area	Potentially explosive atmosphere
Ex approval	Approval for potentially explosive atmosphere

1.3 Manufacturer

Bürkert Fluid Control Systems

Christian-Bürkert-Str. 13–17

74653 Ingelfingen

GERMANY

The contact addresses are available at Contact.

Need more information or additional products?

- Explore the full range of products on our eShop.

Service and support

Direct contact with Bürkert service.

MAN 1000599484 EN Version: D Status: RL (released | freigegeben) printed: 13.08.2026

valvesgo.com

valvesgo.com

2 Safety

2.1 Intended use

The manually operated 2/2-way valve Type 2920, 2921, 2960 and 2961 is designed to control the flow of media. The authorised media are listed in chapter Technical data [▸ 18] **.**

- Use the device only as intended. Non-intended use of the device may be dangerous to people, nearby equipment and the environment.
- Do not expose the device to direct sunlight when installed outdoors.
- Prerequisites for safe and trouble-free operation are correct transportation, correct storage, installation, start-up, operation and maintenance.
- To use the device, observe the permitted data, operating conditions and usage conditions. These specifications can be found in the contract documents, the operating instructions and on the type label.
- Use the device only in conjunction with third-party devices and components recommended or approved by Bürkert.
- Only use equipment that is approved for this type of potentially explosive atmosphere. These devices are identified by a separate Ex type label. Before use, note the information on the separate Ex type label and the Ex supplementary information or the separate Ex operating Instructions.
- Protect the device against electromagnetic interference, UV rays and, when installed outdoors, the effects of climatic conditions.
- Protect device from environmental influences (e.g. UV radiation, air humidity, vibrations, fumes). If you have any questions, contact your Bürkert sales department.

2.2 Basic safety instructions

These safety instructions do not take into account any unforeseen circumstances or events that occur during installation, operation or maintenance. The operator is responsible for observing the location-specific safety regulations, also with reference to personnel.

Risk of injury due to high pressure and escaping medium

- Switch off the pressure before working on the device or system. Vent or drain the lines.

Danger of bursting in case of overpressure

If the device bursts, the medium may cause injuries, burns or scalds.

- Do not exceed the maximum medium pressure. Observe specifications on the type label.
- Observe allowable temperatures.

Danger of burns and risk of fire

- Only touch the device when wearing protective gloves.
- Keep the device away from highly flammable substances and media.

Discharge of medium if packing gland worn.

- Inspect relief bore for any medium leakages.

MAN 1000599484 EN Version: D Status: RL (released | freigegeben) printed: 13.08.2026

valvesgo.com

- If the medium is hazardous, secure the area around the leakage to prevent risks.

Risk of crushing by mechanically powered parts

The upwards and downwards movement of the device means there is a risk of crushing.

- Do not reach into the openings of the valve body.

Danger due to loud noises

Depending on the usage conditions, the device may generate loud noises and vibrations. Particularly with valve bodies bigger than DN65, particular attention must be taken to make sure that the devices are not operated in noisy environments with vibrations. Precise information on the likelihood of loud noises is available from the relevant sales department.

- Wear hearing protection when in the vicinity of the device.

Ensure the following to prevent injuries

- Do not make any modifications to the device and do not subject it to mechanical stress.
- Ensure that only trained technicians carry out installation and maintenance work.
- The correct tools must be used to perform installation and maintenance work.
- Only tighten the device by hand when closing it, do not use any tools or aids. Too much tightening may damage the device.
- Heavy equipment must only be transported, assembled and disassembled with the help of a second person as appropriate and using suitable apparatus.
- The process must be restarted in a defined or controlled manner after an interruption in the power supply or pneumatic supply.
- Operate the device only when it is in perfect condition and in accordance with the operating instructions.
- For applications planning and operation of the device, observe the plant-specific safety regulations.
- Only the media listed in chapter Technical data [▸ 18] should be fed into the port connections.
- Observe the general rules of technical equipment.
- The plant owner is responsible for the safe operation and handling of the plant.

MAN 1000599484 EN Version: D Status: RL (released | freigegeben) printed: 13.08.2026

valvesgo.com

valvesgo.com

3 Product description

3.1 Structure and description

The device is a manually operated seat valve, consisting of a manual actuator and a 2/2 way valve body.

The manual actuator is available in the following sizes:

Nominal diameter DN	Handwheel size	Designation	Handwheel diameter [mm]	Slope per revolution [mm]
15 to 25	S	Small	45	1.25
32 to 40	S/M	Small/Medium	45/110	1.25/1.75
50	M	Medium	110	1.75
65 to 100	L	Large	160	2.0

Tab. 1: Handwheel sizes

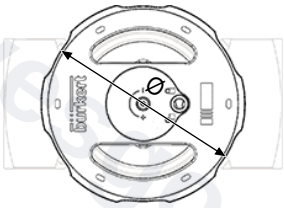

Fig. 1: Handwheel diameter

MAN 1000599484 EN Version: D Status: RL (released | freigegeben) printed: 13.08.2026

valvesgo.com

Nominal diameter (port connection)	Nominal diameter (port connection)	Seat diameter	Stroke nominal value [mm]	
DN	NPS		Globe seat 2961	Angle seat 2960
15	½	for all seat diameters	19	14
20	¾	for all seat diameters	19	18
25	1	3	19	19
32	1¼	20	20	-
		25	20	-
		32	26	26
40	1½	25	20	-
		32	26	-
		40	26	26
50	2	for all seat diameters	26	Material seat seal PTFE 25/steel 27
65	2½	for all seat diameters	27	27
80	3	for all seat diameters	27	-
100	4	for all seat diameters	27	-

Tab. 2: Stroke of control valves

MAN 1000599484 EN Version: D Status: RL (released | freigegeben) printed: 13.08.2026

valvesgo.com

3.2 Variants

Types 2920, 2921, 2960 and 2961 differ due to the valve body and the closure member.

Type	Nominal diameter DN	Valve body	Properties
2920	10 to 80	Angle seat body	▸ with swivel plate ▸ for pure shut-off function
2960	10 to 65	Angle seat body	▸ with control cone ▸ with position indicator and scale to set a defined flow rate
2921	10 to 100	Globe body	▸ with swivel plate ▸ for pure shut-off function
2961	10 to 100	Globe body	▸ with control cone ▸ with position indicator and scale to set a defined flow rate ▸ with screwed-in valve seat that can be replaced to reduce the seat diameter

Tab. 3: Variants

valvesgo.com

MAN 1000599484 EN Version: D Status: RL (released | freigegeben) printed: 13.08.2026

3.2.1 Type 2920, 2960

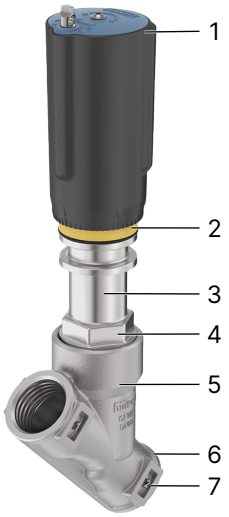

Fig. 2: Example of 2/2-way angle seat valve, Type 2920

1	Handwheel with locking (optional)	2	Position indicator
3	Relief bore	4	Wrench flat for open-end wrench
5	Angle seat body	6	Port connection
7	Flow direction indicator		

MAN 1000599484 EN Version: D Status: RL (released | freigegeben) printed: 13.08.2026

valvesgo.com

3.2.2 Type 2921, 2961

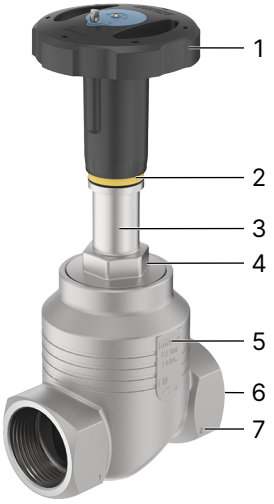

Fig. 3: Example of 2/2-way globe valve, Type 2921

1	Handwheel with locking (optional)	2	Position indicator
3	Relief bore	4	Wrench flat for open-end wrench
5	Globe body	6	Port connection
7	Flow direction indicator		

3.3 Function

By manually overriding the handwheel, the force is transmitted via a spindle and the valve is opened or closed. The medium in the valve body is either approved or blocked off. Turning the handwheel anticlockwise opens the valve, turning it clockwise closes it.

To protect the actuator, we recommend that you do not apply more force than is necessary to adjust the medium pressure.

MAN 1000599484 EN Version: D Status: RL (released | freigegeben) printed: 13.08.2026

valvesgo.com

valvesgo.com

3.3.1 Position indicator

Fig. 4: Position indicator Type 2920 and 2921

1	Handrad mit Skala	2	Reproduzierbare Hubskala

Fig. 5: Position indicator Type 2960 and 2961

1	Handrad mit Skala	2	Reproduzierbare Hubskala

When turning the handwheel anticlockwise, the reproducible stroke scale becomes visible between the position indicator and the handwheel.

NOTICE!

The visibility of the stroke scale is not directly correlated with the closed position of the valve. Depending on the valve design, the repeatable stroke scale may be:

- not be visible when the valve is open, or
- be visible when the valve is closed.

The scale on the handwheel determines the rotation position of the handwheel (50 positions).

The reproducible stroke scale shows, depending on the bottom edge of the handwheel, the relative position of the valve (valve opening) and acts as a fixation point for determining the rotation position.

In the case of valves with locking, the set position can be secured with a lock (see chapter Lock handwheel [▸ 23]).

To set a defined flow rate, use the flow characteristic or the Kv table of values. This is listed in the data sheet under country.burkert.com.

MAN 1000599484 EN Version: D Status: RL (released | freigegeben) printed: 13.08.2026

valvesgo.com

3.3.2 Flow direction

The valve seat is always closed against the medium flow. The flow direction should therefore be set such that the valve reaches the flow beneath the valve seat.

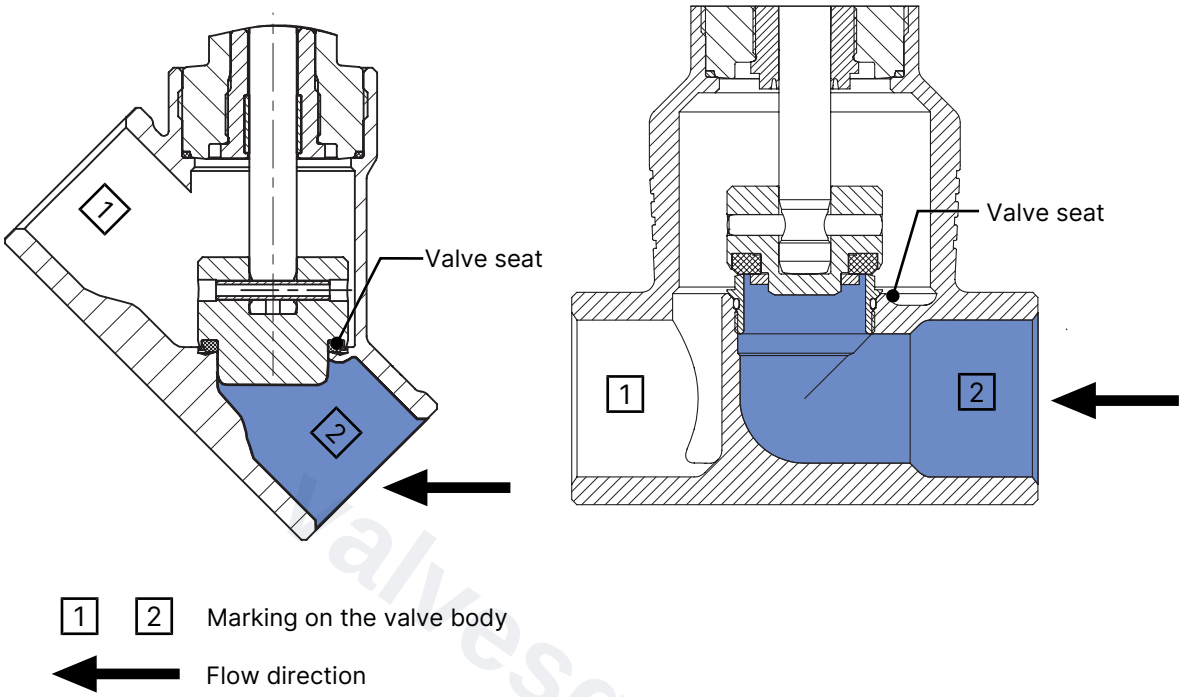

Fig. 6: Flow direction, flow direction below seat

MAN 1000599484 EN Version: D Status: RL (released | freigegeben) printed: 13.08.2026

valvesgo.com

3.3.3 Flow characteristic

Detailed values are listed in the data sheet on the home page: country.burkert.com

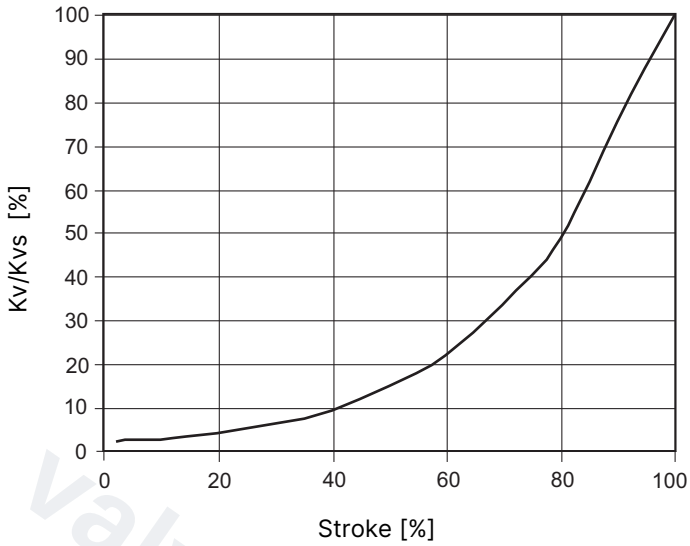

Fig. 7: Graphical presentation of the flow characteristic

- Cone of equal per cent for valve seat sizes 8 to 100
- Flow characteristic as per DIN EN 60534-2-4
- Theoretical rangeability (K_{VS}/K_{VO})
  50: 1 for valve seat size 8 to 100
- K_{VR}-value at 5% of the hub for valve seat sizes > 10
  K_{VR}-value at 10% of the hub for valve seat sizes ≤ 10
  (K_{VR}-value = smallest K_V-value at which the angularity specified in DIN EN 60534-2-4 is still met)

MAN 1000599484 EN Version: D Status: RL (released | freigegeben) printed: 13.08.2026

valvesgo.com

3.4 Product identification

3.4.1 Type label

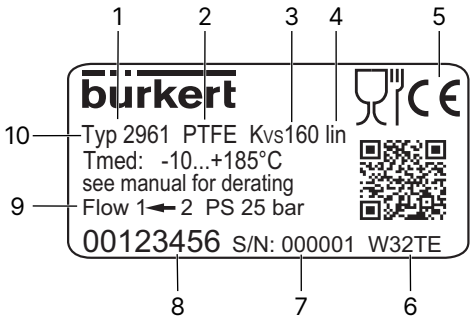

Fig. 8: Description of the type label (example)

1	Type	2	Sealing material
3	Flow coefficient in series conditions	4	Control characteristic form (linear)
5	CE marking	6	Manufacture code
7	Serial number	8	Article number
9	Flow direction	10	Medium temperature

MAN 1000599484 EN Version: D Status: RL (released | freigegeben) printed: 13.08.2026

valvesgo.com

4 Technical data

4.1 Standards and directives

This product complies with the legal requirements applicable at the time of placing on the market and has been developed and tested in accordance with the relevant European directives/regulations and harmonized standards. The conformity is documented and, if necessary, supported by evidence. The EU Declaration of Conformity can be found behind the respective type on the home page country.burkert.com

4.2 Operating conditions

Media	Neutral gases, water, alcohols, oils, fuels, saline solutions, lyes, organic solvents, vapour
Materials and ports	see data sheet
Application environment	Indoors and outdoors Protect the device against electromagnetic interference, UV rays and, when installed outdoors, the effects of climatic conditions.

4.2.1 Temperatures

Ambient temperature	–10...+60 °C
Medium temperature	–10...+230 °C
Storage temperature	–20...+65 °C
Temperature for valve seat seal	for a medium temperature of up to 130 °C: PTFE[1)] for a medium temperature of over 130 °C: PEEK[1)]/steel[2)]

4.2.2 Pressure

Nominal diameter DN	Maximum permissible pressure PS
DN15 to DN50	25 bar (or see type label)
DN65	24 bar (or see type label)
DN80	16 bar (or see type label)
DN100	10 bar (or see type label)

Tab. 4: Maximum permissible pressure

1) Leakage class VI

2) Seal material is steel on request for leakage class II and III

MAN 1000599484 EN Version: D Status: RL (released | freigegeben) printed: 13.08.2026

valvesgo.com

4.2.2.1 Pressure and temperature restriction (derating) of the valve body

Temperature [°C]	Operating pressure [bar]
–10...+50	25
100	24.5
150	22.4
200	20.3
230	19

Tab. 5: Derating the operating pressure as per DIN EN 12516-1/PN25

Temperature [°C]	Operating pressure [bar]
–29...+38	19
50	18.4
100	16.2
150	14.8
200	13.7
230	12.7

Tab. 6: Derating the operating pressure as per ASME B16.5/ASME B16.34 Cl.150

Temperature [°C]	Operating pressure [bar]
–10...+50	14
100	14
150	13.4
200	12.4
230	11.7

Tab. 7: Derating the operating pressure as per JIS B 2220 10K

MAN 1000599484 EN Version: D Status: RL (released | freigegeben) printed: 13.08.2026

valvesgo.com

valvesgo.com

5 Installation

DANGER!

Risk of injury due to high pressure and escaping medium

- Switch off the pressure before working on the device or system. Vent or drain the lines.

WARNING!

Risk of injury due to improper installation

- Installation may be carried out by authorised technicians only and with the appropriate tools.
- Observe tightening torques.

WARNING!

Risk of crushing by mechanically powered parts

- Do not reach into the openings of the valve body.

WARNING!

Risk of injury from unintentional activation of the system and uncontrolled restart

- Secure the system against unintentional activation.
- Ensure a controlled restart after installation.

CAUTION!

Risk of injury due to a heavy device

During transportation or installation work, a heavy device may fall and cause injuries.

- Transport, install and remove heavy device with the aid of a second person only.
- Use suitable tools.

NOTICE!

Material damage caused by loose screw connections

Where the pipeline is subject to high mechanical stress (vibrations) or in applications with temperatures above 140 °C, the screw connection at the body connection may become loose.

- Before installation in the pipeline, and at regular intervals when operational, check the screw connection on the body connection. When doing so, observe the tightening torques for the body connection.

5.1 Notes for correct installation

- Note the installation position. The device can be installed in any manner, preferably with the actuator facing upwards.
- Ensure pipelines are aligned before connection.
- Note the flow direction. The flow direction is visible on the valve body and on the type label.
- Clear impurities from pipelines (seal material, metal chips, etc.).
- Do not move the handwheel beyond the adjustment range indicated by the position indicator for devices without valve body.

MAN 1000599484 EN Version: D Status: RL (released | freigegeben) printed: 13.08.2026

valvesgo.com

valvesgo.com

5.1.1 Devices with welded connection

Remove the actuator from the valve body as follows:

- Turn the valve approx. twice to open it and to release the valve seat seal.
- Place a suitable open-end wrench on the wrench flat of the body connection.
- Unscrew actuator from the valve body.

5.1.2 Devices with threaded connection

- Only uninstall the actuator if required by the customer.

5.2 Installing valve body

Valve body with welded connection:

- Weld or bond valve body in pipe system.

Other body variants:

- Connect valve body to pipeline.

5.3 Install the actuator on devices with a welded connection

- Check and replace seal. Make certain that no remnants of seal material get into the pipe system.

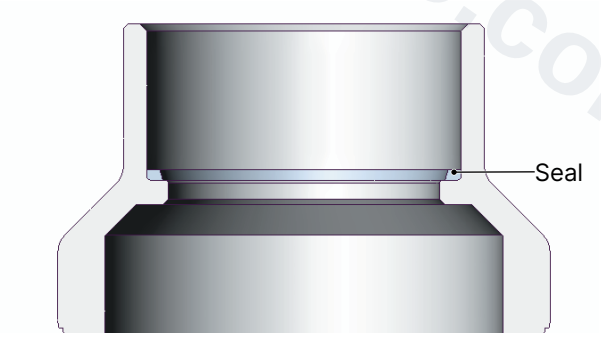

Fig. 9: Seal

WARNING!

Danger due to incorrect lubricants

Unsuitable lubricants may contaminate the medium. There is a risk of explosion in oxygen applications.

- Only used accordingly approved lubricants for specific applications.

- Grease the external thread of the body connection (e.g. with Klüberpaste UH1 96-402 from Klüber).
- Screw actuator into valve body, noting the tightening torque in accordance with the following table.

MAN 1000599484 EN Version: D Status: RL (released | freigegeben) printed: 13.08.2026

valvesgo.com

Nominal diameter of valve body DN	Tightening torque [Nm]	Tolerance
10/15	45	±3
20	50	±3
25	60	±3
32	65	±3
40	65	±3
50	70	±3
65	100	±3
80	120	±5
100	150	±5

Tab. 8: Tightening torque values for screwing into the valve body

5.4 Set stroke limit

Setting the minimum and maximum stroke limit is possible as an option. An adjusting sleeve is used for this purpose.

- By turning the handwheel clockwise, the valve is moved to the closed position.
- Loosen the screw on the handwheel (hexagon socket, width across flats 2) and remove the handwheel.
- Screw the adjusting sleeve clockwise until it comes to a stop. Minimum stroke is set.
- Mount the handwheel on the actuator. The square on the spindle and the hexagon head of the adjusting sleeve must be correctly aligned to the geometry of the handwheel so that they fit into each other.
- Move the valve to the desired maximally open position.
- Loosen the screw on the handwheel and remove the handwheel.
- Pull the adjusting sleeve upwards and at the same time, screw anticlockwise until it comes to a stop. Maximum stroke is set.

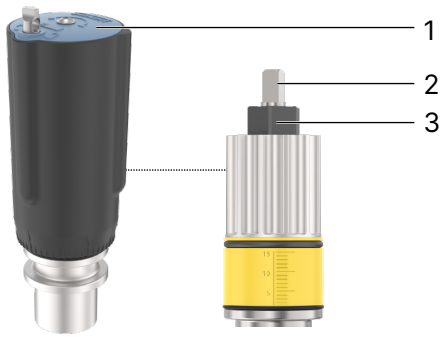

Fig. 10: Set stroke limit

1	Schraube am Handrad	2	Vierkant
3	Einstellhülse		

MAN 1000599484 EN Version: D Status: RL (released | freigegeben) printed: 13.08.2026

valvesgo.com

- Mount the handwheel on the actuator. The square on the spindle and the hexagon head of the adjusting sleeve must be correctly aligned to the geometry of the handwheel so that they fit into each other.
- Tighten the screw on the handwheel with a tightening torque of 0.9 Nm. If necessary, bond the screw to ensure a permanent hold.

5.5 Lock handwheel

It is also an option to lock the handwheel to prevent unintentional or unauthorised operation of the valve.

- Handwheel size S can be locked in 12 locking positions per revolution (every 30° corresponds to 0.1 mm of stroke)
- Handwheel sizes M and L can be locked in 13 locking positions per revolution (every 27° corresponds to 0.13 mm of stroke with handwheel size M and 0.15 mm of stroke with size L)

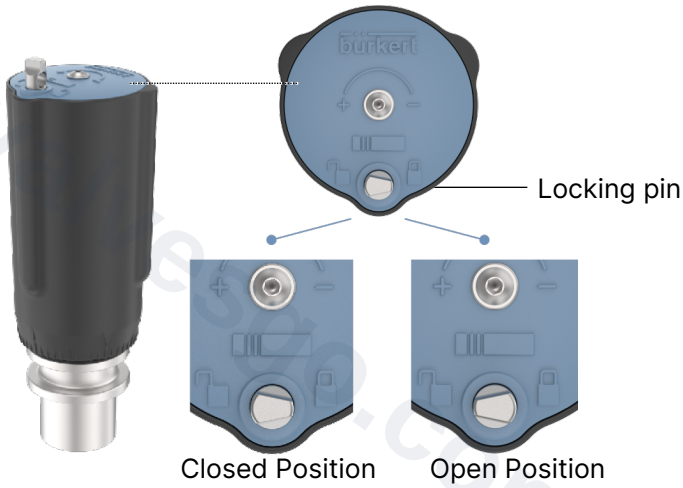

Fig. 11: Lock handwheel

The locking pin has a bore (Ø 3.8) and can be secured against unauthorised use with a padlock (not included in scope of delivery).

The leakage class specified in the technical data cannot be guaranteed when the valve is locked in the closed position, depending on the operating and application conditions.

- Push locking pin down and rotate by 180° (either clockwise or anticlockwise). It may be necessary to turn the handwheel slightly so that the locking pin reaches its end position. The locking pin must lock into its end position so that the bore is fully visible once again.
- Insert a padlock through the bore in the locking pin and secure it.

MAN 1000599484 EN Version: D Status: RL (released | freigegeben) printed: 13.08.2026

valvesgo.com

6 Disassembly

DANGER!

Risk of injury due to high pressure and escaping medium

- Switch off the pressure before working on the device or system. Vent or drain the lines.

- Switch off pressure and drain lines. Rinse the pipeline if toxic media have been used.
- Disassemble the device.

valvesgo.com

MAN 1000599484 EN Version: D Status: RL (released | freigegeben) printed: 13.08.2026

7 Servicing and maintenance

DANGER!

Risk of injury due to high pressure and escaping medium

- Switch off the pressure before working on the device or system. Vent or drain the lines.

DANGER!

Discharge of medium if packing gland worn.

- Inspect relief bore for any medium leakages.
- If the medium is hazardous, secure the environment against risks.

WARNING!

Risk of injury due to improper maintenance

- Maintenance may only be performed by authorised technicians and with the appropriate tools.

7.1 Maintenance work

7.1.1 Actuator

When used in accordance with these operating instructions, the actuator of the manually operated valve is maintenance-free.

7.1.2 Inspection intervals

- Perform a visual inspection of the device once per year.
- If leaks occur, replace the respective wearing part.

Muddy and abrasive media require correspondingly shorter inspection intervals.

7.2 Cleaning

Use commercially available cleaning agents for external cleaning.

NOTICE!

Avoid causing damage with cleaning agents

- Before cleaning, check that the cleaning agents are compatible with body materials and seals.

MAN 1000599484 EN Version: D Status: RL (released | freigegeben) printed: 13.08.2026

valvesgo.com

7.3 Troubleshooting

Troubleshooting	Cause	Elimination
Valve is not tight	Dirt between seal and valve seat	Install dirt trap
	Valve seat seal worn	Install a new closure member
	Flow direction interchanged	Observe the marking for the flow direction on the valve body
	Operating pressure too high	Observe pressure specifications on the type label
Valve is leaking on the relief bore	Cable gland worn	Replacing cable gland

Tab. 9: Troubleshooting

MAN 1000599484 EN Version: D Status: RL (released | freigegeben) printed: 13.08.2026

valvesgo.com

8 Spare parts

CAUTION!

Risk of injury and/or damage due to incorrect parts

Incorrect accessories and unsuitable spare parts may cause injuries and damage the device and the surrounding area.

- Use only original accessories and original spare parts from Bürkert.

Spare parts can be ordered depending on the variant and valve assembly:

- Order by entering the article number in the eShop (See Chapter Order spare parts in eShop [▸ 27])
- Order by entering the spare part set

Exact details for finding spare and wear parts are in the catalogue of spare and wear parts .

8.1 Order spare parts in eShop

- Open Bürkert eShop on the internet.
- Log in or register.
- Find spare parts via the article number. This can be seen on the type label on the device.
- Put spare parts in the basket and complete order.

If you cannot find spare parts, contact your Bürkert service employee.

MAN 1000599484 EN Version: D Status: RL (released | freigegeben) printed: 13.08.2026

valvesgo.com

valvesgo.com

9 Logistics

9.1 Transport and storage

- Protect the device against moisture and dirt in the original packaging during transportation and storage.
- Avoid UV radiation and direct sunlight.
- Protect connections, if present, from damage with protective caps.
- Observe the permitted storage temperature.

9.2 Return

No work or tests will be carried out on the device until a valid Contamination Declaration has been received.

- To return a used device to Bürkert, contact the Bürkert sales office. A return number is required.

9.3 Disposal

Environmentally friendly disposal

- Follow national regulations regarding disposal and the environment.
- Collect electrical and electronic devices separately and dispose of them as special waste.

Further information at country.burkert.com

MAN 1000599484 EN Version: D Status: RL (released | freigegeben) printed: 13.08.2026

valvesgo.com