2/2-way diaphragm valve with manually operated actuator (FullFunction)

- Valve body and diaphragm are available in different materials and variants
- Wetted surfaces from Ra ≤ 0.38 µm...≤ 1.6 µm (optionally electropolished)
- Available in all common connection sizes and variants
- Integrated locking
- Minimum and maximum stroke limitation

Product variants described in the data sheet may differ from the product presentation and description.

Can be combined with

Type SV02
Diaphragms

Type 2933
2/2-way diaphragm valve with manually operated actuator (basic)

Type 2974
T-diaphragm valve with manually operated actuator (FullFunction)

Type 2975
Tank bottom diaphragm valve with manually operated actuator (FullFunction)

Type 2103
2/2-way diaphragm valve with pneumatic stainless steel actuator (Type ELEMENT) for decentralised automation

Type 8098
FLOWave SAW flowmeter

Type description

The Type 2973 manually operated diaphragm valve consists of a manually operated actuator, a diaphragm and a 2-way body. The manual actuator with plastic handwheel ensures use in hygienic or aggressive ambient conditions. The flow-optimised valve body with minimum dead space enables high flow values and a wide range of possible applications. The valve body and the diaphragms are available in all common materials and variants. The actuator has a compact, autoclavable design and is compatible with all other Bürkert diaphragm valves. An explosion-proof ATEX/IECEx device variant is available. The manual actuator possesses a visual position indicator with reproducible stroke scale. The actuator also possesses an adjustable minimum and maximum stroke limitation and/or locking. The manual actuator can be optionally equipped with sensors for position feedback.

DTS 1000597497 EN Version: D Status: RL (released | freigegeben | valide) printed: 01.06.2026

© Christian Bürkert GmbH & Co. KG, Subject to alteration

valvesgo.com

Table of contents

1. General technical data 3

2. Approvals and conformities 4

2.1. General notes 4
2.2. Conformity 4
2.3. Standards 4
2.4. Explosion protection 4
2.5. Foods and beverages/Hygiene 4
2.6. Others 5

3. Materials 6

3.1. Bürkert resistApp 6
3.2. Material specifications 6
3.3. Example of available diaphragm materials 7

4. Dimensions 8

4.1. Manual actuator 8
Diaphragm size 15...25 8
Diaphragm size 32...50 9
4.2. Forged steel valve body (VS) with welded connection 10
4.3. Forged steel valve body (VS) with clamp connection 11
4.4. Tube valve body (VP) with welded connection 12
4.5. Tube valve body (VP) with clamp connection 13
4.6. Tube valve body (VP) with threaded connection 14
4.7. Tube valve body (VP) with flange connection 15
4.8. Cast valve body (VG) with welded connection 16
4.9. Cast valve body (VG) with clamp connection 18
4.10. Plastic valve body (PV, PP, PD) with spigot connection 19
4.11. Plastic valve body (PW, PV, PP, PD) with true union 21
4.12. Plastic valve body (PV, PP, PD) with flange connection 24

5. Performance specifications 26

5.1. Flow characteristics 26
Forged steel valve body (VS) 26
Tube valve body (VP) 26
Cast valve body (VG) 26
Plastic valve body (PW, PV, PP, PD) 27
5.2. Medium pressure 27
5.3. Pressure temperature diagram for plastic body 28

6. Ordering information 29

6.1. Bürkert eShop 29
6.2. Bürkert product filter 29
6.3. Bürkert Product Enquiry Form 29

DTS 1000597497 EN Version: D Status: RL (released | freigegeben | valide) printed: 01.06.2026

valvesgo.com

1. General technical data

Product properties	
Dimensions	Further information can be found in chapter "4. Dimensions" on page 8.
Material [1.)]	
Forged steel valve body (VS) [1.)]	Forged stainless steel 1.4435 in accordance with BN2 DIN EN 10222 - 5, F316L in accordance with to ASTM, A182/A182M and 316L in accordance with to ASME BPE
Tube valve body (VP) [1.)]	Stainless steel tube 1.4435-BN2 / UNS S31603 (316L) according to DIN 11866, ASTM A269 / A270, DIN EN 10217 - 7 / 10216 - 5
Cast valve body (VG) [1.)]	Stainless steel precision casting 1.4435 / 316L
Plastic valve body (PW, PV, PP, PD) [1.)]	PVC-C, PVC-U, PP, PVDF
Diaphragm	EPDM (AD) [1.)], PTFE/EPDM (EA) [1.)], Advanced PTFE/EPDM (EU) [1.)], laminate of GYLON® and EPDM (ER) [1.)]
Actuator (diaphragm bonnet/handwheel)	Stainless steel/PPS
Diaphragm size	15...50 (65...100 see **Type 3232** ▶ and **Type 3233** ▶)
Standard surface quality [2.)]	
Forged steel valve body (VS) [1.)]	Internally electrically polished: Ra ≤ 0.38 µm (NO17) [1.)] (ASME BPE SF4 / DIN HE4) (externally forged surface electrically polished) Internally mechanically polished: Ra ≤ 0.5 µm (NO14) [1.)] (ASME BPE SF1) (externally forged surface)
Tube valve body (VP) [1.)]	Internally electrically polished: Ra ≤ 0.38 µm (NO17) [1.)] (ASME BPE SF4 / DIN HE4) (externally electrically polished) Internally glass bead blasted: Ra ≤ 1.6 µm (NO05) [1.)] (externally glass bead blasted (NO01) [1.)])
Cast valve body (VG) [1.)]	Internally electrically polished: Ra ≤ 0.6 µm (NO16) [1.)] (ASME BPE SF6) (externally cast surface electrically polished) Internally mechanically polished: Ra ≤ 0.76 µm (NO06) [1.)] (ASME BPE SF3 / DIN H2) (externally cast surface)
Medium data	
Operating medium	Neutral gases and liquids, highly purified, sterile, aggressive or abrasive mediums (see **resistance chart** ▶)
Medium temperature	
EPDM (AD) [1.)]	- 10...+ 143 °C (steam sterilisation + 150 °C for 60 min)
PTFE/EPDM (EA) [1.)]	- 10...+ 130 °C (steam sterilisation + 140 °C for 60 min)
Advanced PTFE/EPDM (EU) [1.)]	- 5...+ 143 °C (steam sterilisation + 150 °C for 60 min)
Laminate of GYLON® and EPDM (ER) [1.)]	- 5...+ 130 °C (steam sterilisation + 140 °C for 60 min)
Product connections	
Port connection [2.)]	
Nominal diameter	DN 08...DN 65 (¼"...2 ½")
Stainless steel valve body [3.)]	
Welded connection [2.)]	DIN EN ISO 1127 / ISO 4200 / DIN 11866 series B DIN 11850 - 2 / DIN 11866 series A / DIN EN 10357 series A ASME BPE / DIN 11866 series C
Clamp connection [2.)]	DIN 32676 series A (DIN pipe) DIN 32676 series B (ISO pipe) ASME BPE
Environment and installation	
Installation position	See **operating instructions Type 2973** ▶
Ambient temperature: actuator (diaphragm bonnet/handwheel)	
Stainless steel/PPS	- 10...+ 130 °C (short-term up to + 150 °C), autoclavable

1.) This information is part of the product key (see "6.3. Bürkert Product Enquiry Form" on page 29).
2.) Further variants are available on request.
3.) Tube valve body (VP) also available with flange and threaded connections

DTS 1000597497 EN Version: D Status: RL (released | freigegeben | valide) printed: 01.06.2026

valvesgo.com

2. Approvals and conformities

2.1. General notes

- The approvals and conformities listed below must be stated when making enquiries. This is the only way to ensure that the product complies with all required specifications.
- Not all available variants can be supplied with the below mentioned approvals or conformities.

2.2. Conformity

In accordance with the Declaration of Conformity, the product is compliant with the EU Directives.

2.3. Standards

The applied standards which are used to demonstrate compliance with the EU Directives are listed in the EU-Type Examination Certificate and/or the EU Declaration of Conformity.

2.4. Explosion protection

Approval	Description
	Optional: Explosion protection (valid for the variable code PX51) As a category 2 device suitable for zone 1/21 and zone 2/22. **ATEX:** EPS 18 ATEX 2 008 X II 2G Ex h IIC T4...T2 Gb II 2D Ex h IIIC T135 °C...T300 °C Db **IECEx:** IECEx EPS 18.0007X Ex h IIC T4...T2 Gb Ex h IIIC T135 °C...T300 °C Db

Temperature class	T2	T3	T4
Maximum surface temperature	+ 300 °C	+ 200 °C	+ 135 °C
Ambient temperature	- 40...+ 130 °C	- 40...+ 130 °C	- 40...+ 100 °C
Maximum medium temperature	+ 285 °C	+ 185 °C	+ 125 °C

Note: The ambient and medium temperature range may be limited by non-ex-relevant specifications. Observe the Operating Instructions.

2.5. Foods and beverages/Hygiene

Conformity	Description
FDA	**FDA – Code of Federal Regulations** The diaphragms made of EPDM (AD), PTFE/EPDM (EA), Advanced PTFE/EPDM (EU) and laminate of GYLON® and EPDM (ER) comply with the Code of Federal Regulations published by the FDA (Food and Drug Administration, USA).
USP	**United States Pharmacopeial Convention (USP)** The diaphragms made of EPDM (AD), PTFE/EPDM (EA), Advanced PTFE/EPDM (EU) and laminate of GYLON® and EPDM (ER) are tested according to USP Class VI.
	EC Regulation 1935/2004 of the European Parliament and of the Council The diaphragms made of EPDM (AD), PTFE/EPDM (EA), Advanced PTFE/EPDM (EU) and laminate of GYLON® and EPDM (ER) are suitable for use with food and beverages (according to EC Regulation 1935/2004/EC).

DTS 1000597497 EN Version: D Status: RL (released | freigegeben | valide) printed: 01.06.2026

valvesgo.com

2.6. Others

Approval	Description
TA Luft	Technical instruction on air quality control (valid for the variable code PM01)

DTS 1000597497 EN Version: D Status: RL (released | freigegeben | valide) printed: 01.06.2026

valvesgo.com

valvesgo.com

3. Materials

3.1. Bürkert resistApp

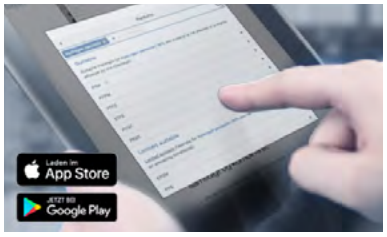

Bürkert resistApp – Chemical resistance chart

You want to ensure the reliability and durability of the materials in your individual application case? Verify your combination of media and materials on our website or in our resistApp.

Start chemical resistance check

3.2. Material specifications

Note:
Your product variant may differ from this illustration depending on the body and interface options.

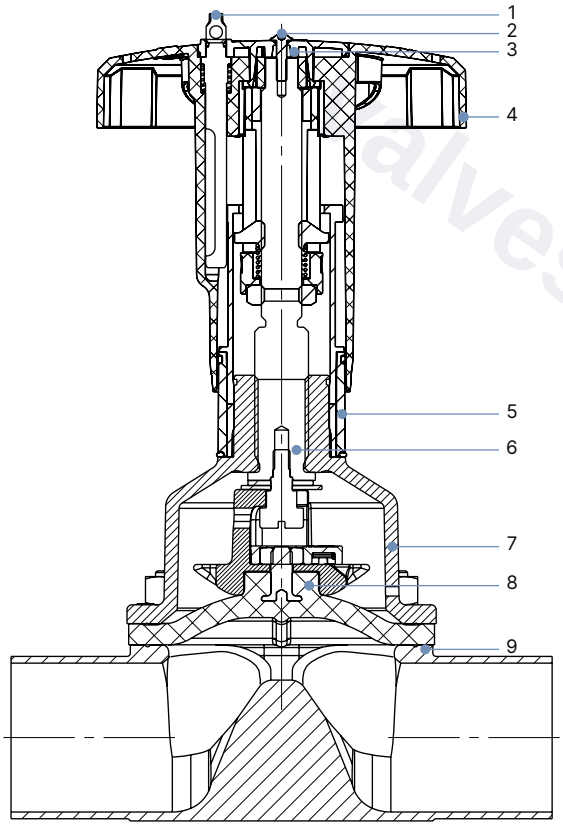

No.	Element	Material
1	Lock pin	Stainless steel 1.4305
2	Screw	Stainless steel A2
3	Handwheel cover	Polyamide (PA)
4	Handwheel	Polyphenylene sulphide (PPS)
5	Visual position indicator	Polyamide (PA)
6	Valve spindle	Stainless steel 1.4305
7	Diaphragm socket	Stainless steel 1.4308
8	Diaphragm	EPDM (AD), PTFE/EPDM (EA), Advanced PTFE/EPDM (EU), Laminate of GYLON® and EPDM (ER)
9	Valve body	See "1. General technical data" on page 3.

valvesgo.com

DTS 1000597497 EN Version: D Status: RL (released | freigegeben | valide) printed: 01.06.2026

valvesgo.com

3.3. Example of available diaphragm materials

The diaphragms have been developed to meet the unique challenges of hygienic and sterile requirements. Bürkert offers diaphragms with precise material composition and high accuracy. Bürkert diaphragms are available in a wide range of materials which have been tested and proven in applications in the food and beverage, biotechnology, pharmaceutical and cosmetics industries. Diaphragms are tested during development and production to ensure reliability under difficult process conditions.

- EPDM (AD)
- PTFE/EPDM (EA)
- Advanced PTFE/EPDM (EU)
- Laminate of GYLON® and EPDM (ER)

Further information can be found in our flyer “Diaphragm competence for hygienic applications” on our **website** ▶.

DTS 1000597497 EN Version: D Status: RL (released | freigegeben | valide) printed: 01.06.2026

valvesgo.com

valvesgo.com

4. Dimensions

4.1. Manual actuator

Diaphragm size 15...25

Note:
Dimensions in mm, unless otherwise stated

Position open	Position closed
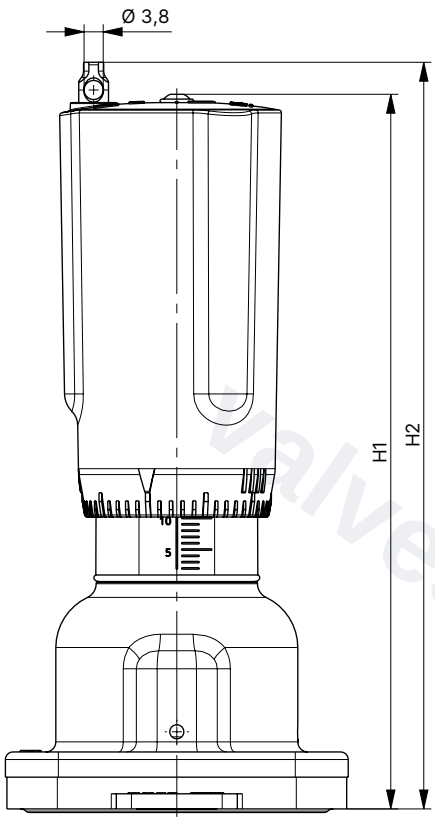	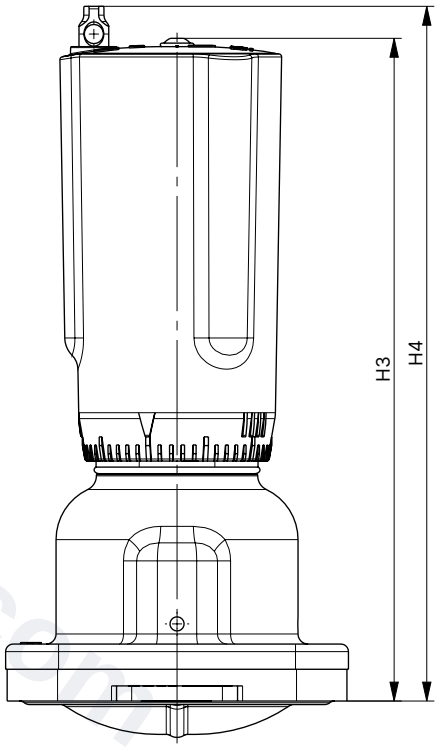

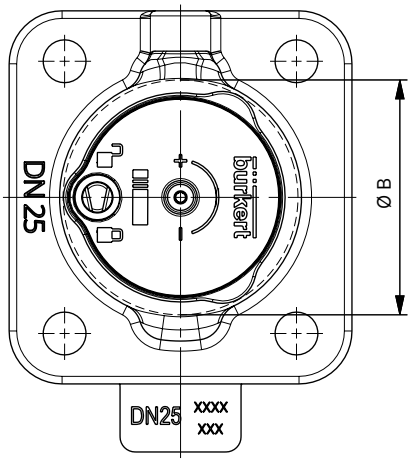

Diaphragm size	H1	H2	H3	H4	Ø B
15	127	133	121	127	45
20	138	144	129	135	45
25	143	149	133	139	45

DTS 1000597497 EN Version: D Status: RL (released | freigegeben | valide) printed: 01.06.2026

valvesgo.com

DTS 1000597497 EN Version: D Status: RL (released | freigegeben | valide) printed: 01.06.2026

Diaphragm size 32...50

Note:
Dimensions in mm, unless otherwise stated

Position open	Position closed
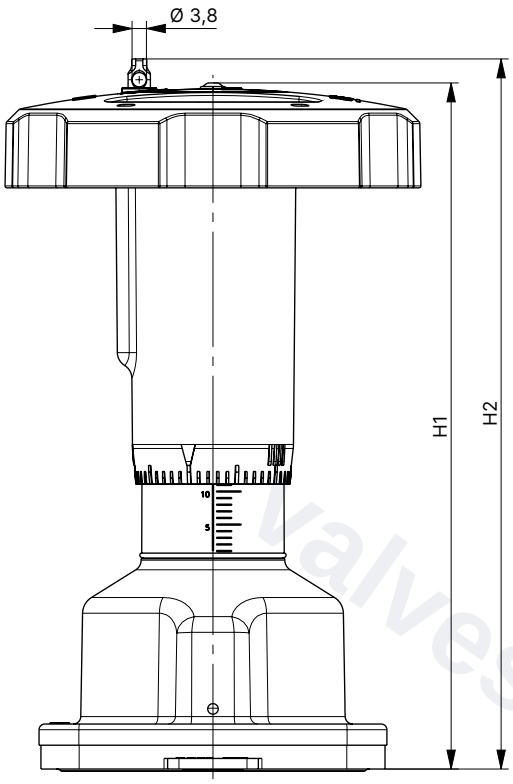	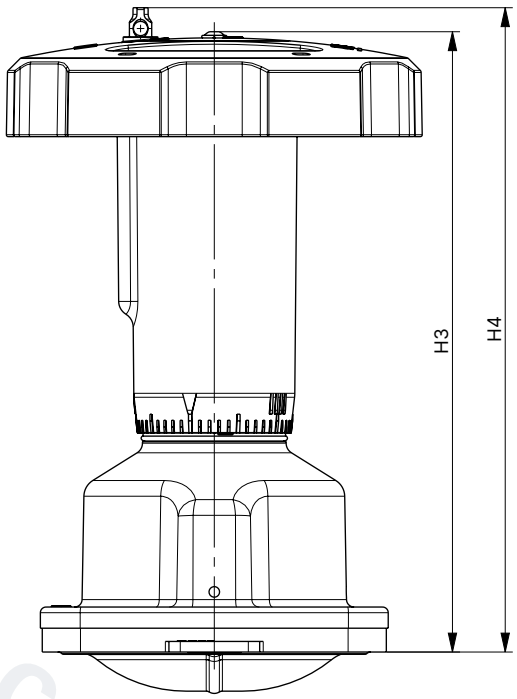

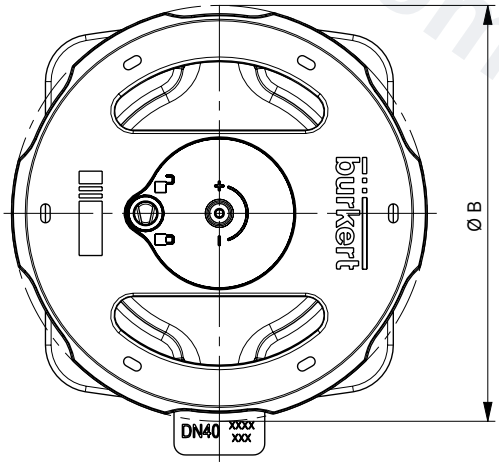

Diaphragm size	H1	H2	H3	H4	Ø B
32	177	183	163	169	110
40	182	188	164	170	110
50	197	203	173	179	110

valvesgo.com

4.2. Forged steel valve body (VS) with welded connection

Note:

- Dimensions in mm, unless otherwise stated
- Further information on the drainage angle can be found in the "Supplementary instructions Type 2xxx 3xxx" on our website (see **operating instructions Type 2973** ▶).

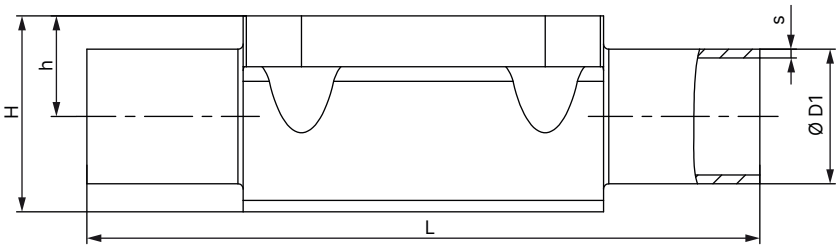

Diaphragm size	Port connection DN	Ø D1	s	L	h	H	Product key [1.)]
DIN EN ISO 1127 / ISO 4200 / DIN 11866 series B							
15	8	13.5	1.6	108	8.15	19.85	SA40
15	10	17.2	1.6	110	12.05	23.75	SA41
15	15	21.3	1.6	110	12.05	23.75	SA42
20	15	21.3	1.6	119	16	30.3	SA42
20	20	26.9	1.6	119	16	30.3	SA43
25	20	26.9	1.6	119	19	37	SA43
25	25	33.7	2.0	129	19	37	SA44
40	25	33.7	2.0	161	27.6	52.4	SA44
40	32	42.4	2.0	161	27.6	52.4	SA45
40	40	48.3	2.0	161	27.6	52.4	SA46
50	50	60.3	2.0	192	35.5	68.3	SA47
DIN 11850 - 2 / DIN 11866 series A / DIN EN 10357 series A							
15	10	13	1.5	110	8.15	19.85	SD40
15	15	19	1.5	110	12.05	23.75	SD42
20	20	23	1.5	119	16.0	30.3	SD43
25	25	29	1.5	129	19.0	37.0	SD44
40	32	35	1.5	161	27.6	52.4	SD45
40	40	41	1.5	161	27.6	52.4	SD46
50	50	53	1.5	192	35.5	68.3	SD47
ASME BPE / DIN 11866 series C							
15	½"	12.7	1.65	108	8.15	19.85	SA92
15	¾"	19.05	1.65	108	12.05	23.75	SA93
20	¾"	19.05	1.65	117	16.0	30.3	SA93
25	1"	25.4	1.65	127	19.0	37.0	SODF
40	1½"	38.1	1.65	159	27.6	52.4	SODH
50	2"	50.8	1.65	190	35.5	68.3	SODI
50	2½"	63.5	1.65	192	35.5	68.6	SODJ
BS 4825							
15	15	12.7	1.20	108	8.15	19.85	SODD
20	20	19.05	1.20	117	16.0	30.3	SODE
25	25	25.4	1.65	127	19.0	37.0	SODF
40	40	38.1	1.65	159	27.6	52.4	SODH
50	50	50.8	1.65	190	35.5	68.3	SODI
50	65	63.5	1.65	192	35.5	68.6	SODJ
SMS 3008							
25	25	25	1.2	129	19	37	SA60
40	40	38	1.2	161	27.6	52.4	SA62
50	50	51	1.2	192	35.5	68.3	SA63

1.) This information is part of the product key (see "6.3. Bürkert Product Enquiry Form" on page 29).

DTS 1000597497 EN Version: D Status: RL (released | freigegeben | valide) printed: 01.06.2026

valvesgo.com

4.3. Forged steel valve body (VS) with clamp connection

Note:

- Dimensions in mm, unless otherwise stated
- Further information on the drainage angle can be found in the "Supplementary instructions Type 2xxx 3xxx" on our website (see **operating instructions Type 2973** ▶).

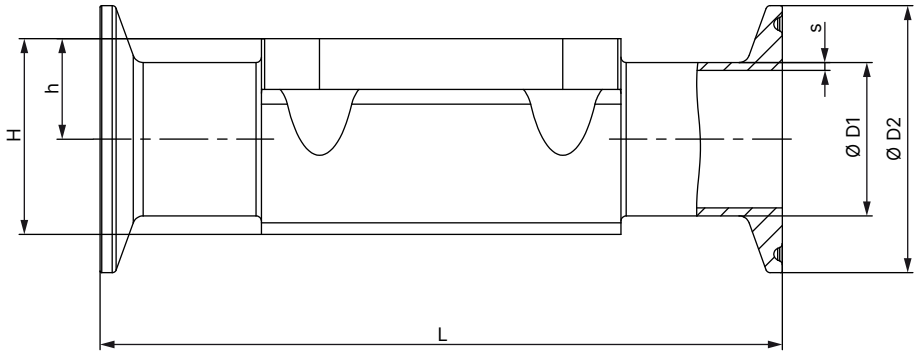

Diaphragm size	Port connection DN	Ø D1	s	Ø D2	L	h	H	Product key [1.)]	Variable code [1.)]
DIN 32676 series B (ISO pipe)									
15	15	21.3	1.6	50.5	167	12.05	23.75	TC52	–
20	20	26.9	1.6	50.5	114	16.0	30.3	TC43	–
25	25	33.7	2	50.5	129	19	37	TC44	–
40	40	48.3	2	64.0	161	27.6	52.4	TC46	–
50	50	60.3	2	77.5	190	35.5	68.3	TC47	–
DIN 32676 series A (DIN pipe)									
15	10	13	1.5	34.0	110	8.15	19.85	TD41	–
15	15	19	1.5	34.0	110	12.05	23.75	TD42	–
20	20	23	1.5	34.0	119	16	30.3	TD43	–
25	25	29	1.5	50.5	129	19	37	TD44	–
40	40	41	1.5	50.5	161	27.6	52.4	TD46	–
50	50	53	1.5	64.0	192	35.5	68.3	TD47	–
ASME BPE									
15	½"	12.7	1.65	25.0	89	8.15	19.85	TG02	–
15	½"	12.7	1.65	25.0	108	8.15	19.85	TG02	AF34
15	¾"	19.05	1.65	25.0	89	12.05	23.75	TG03	–
20	¾"	19.05	1.65	25.0	102	16	30.3	TG03	–
20	¾"	19.05	1.65	25.0	117	16	30.3	TG03	AF34
25	1"	25.4	1.65	50.5	114	19	37	TG04	–
25	1"	25.4	1.65	50.5	127	19	37	TG04	AF34
40	1½"	38.1	1.65	50.5	140	27.6	52.4	TG05	–
40	1½"	38.1	1.65	50.5	159	27.6	52.4	TG05	AF34
50	2"	50.8	1.65	64.0	159	35.5	68.3	TG06	–
50	2"	50.8	1.65	64.0	190	35.5	68.3	TG06	AF34

1.) This information is part of the product key (see "6.3. Bürkert Product Enquiry Form" on page 29).

DTS 1000597497 EN Version: D Status: RL (released | freigegeben | valide) printed: 01.06.2026

valvesgo.com

4.4. Tube valve body (VP) with welded connection

Note:

- Dimensions in mm, unless otherwise stated
- Further information on the drainage angle can be found in the "Supplementary instructions Type 2xxx 3xxx" on our website (see **operating instructions Type 2973** ▶).

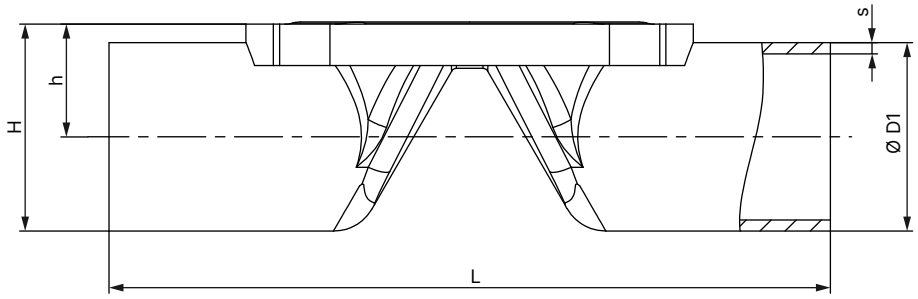

Diaphragm size	Port connection DN	Ø D1	s	L	h	H	Product key [1.)]
DIN EN ISO 1127 / ISO 4200 / DIN 11866 series B							
15	15	21.3	1.6	110.0	14.35	25.0	SA42
20	20	26.9	1.6	119.0	17.15	30.45	SA43
25	25	33.7	2.0	129.0	20.55	37.4	SA44
32	32	42.4	2.0	148.0	25.10	46.3	SA45
40	40	48.3	2.0	161.0	29.35	53.5	SA46
50	50	60.3	2.0	192.0	35.35	65.50	SA47
DIN 11850 - 2 / DIN 11866 series A / DIN EN 10357 series A							
15	15	19	1.5	110	13.20	22.70	SD42
15	20	23	1.5	119	15.20	26.70	SD43
20	25	29	1.5	129	18.20	32.70	SD44
25	32	35	1.5	148	21.20	38.70	SD45
32	40	41	1.5	161	24.40	44.90	SD46
40	50	53	1.5	192	31.70	58.20	SD47
ASME BPE / DIN 11866 series C							
15	¾"	19.05	1.65	117.0	13.23	25.73	SA93
20	1"	25.4	1.65	127.0	16.40	41.65	SODF
32	1½"	38.1	1.65	159.0	22.95	48.20	SODH
40	2"	50.8	1.65	190	30.60	62.60	SODI
50	2½"	63.5	1.65	192	37.35	69.1	SODJ

1.) This information is part of the product key (see "6.3. Bürkert Product Enquiry Form" on page 29).

DTS 1000597497 EN Version: D Status: RL (released | freigegeben | valide) printed: 01.06.2026

valvesgo.com

4.5. Tube valve body (VP) with clamp connection

Note:

- Dimensions in mm, unless otherwise stated
- Further information on the drainage angle can be found in the "Supplementary instructions Type 2xxx 3xxx" on our website (see **operating instructions Type 2973** ▶).

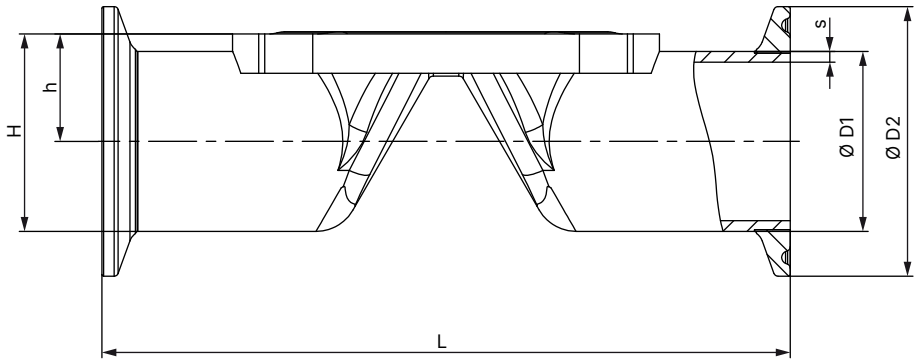

Diaphragm size	Port connection DN	Ø D1	s	Ø D2	L	h	H	Product key [1.)]
DIN 32676 series B (ISO pipe)								
15	15	21.3	1.6	50.5	110	14.35	39.60	TC52
20	20	26.9	1.6	50.5	119	17.15	42.40	TC43
25	25	33.7	2.0	50.5	129	20.55	45.80	TC44
32	32	42.4	2.0	64.0	148	25.10	57.10	TC55
40	40	48.3	2.0	64.0	161	29.35	61.35	TC46
50	50	60.3	2.0	77.5	192	35.35	74.10	TC47
DIN 32676 series A (DIN pipe)								
15	15	19.0	1.5	34.0	110	13.2	30.20	TD42
15	20	23.0	1.5	34.0	119	15.20	32.20	TD43
20	25	29.0	1.5	50.5	129	18.20	43.45	TD44
25	32	35.0	1.5	50.5	148	21.20	46.45	TD45
32	40	41.0	1.5	50.5	161	24.40	49.65	TD46
40	50	53.0	1.5	64.0	192	31.70	63.70	TD47
ASME BPE								
15	¾"	19.05	1.65	25.0	102	13.20	25.73	TG03
20	1"	25.4	1.65	50.5	114	16.40	41.65	TG04
32	1½"	38.10	1.65	50.5	140	22.95	48.20	TG05
40	2"	50.80	1.65	64.0	159	30.60	62.60	TG06
50	2½"	63.5	1.65	77.5	190	37.35	69.1	TG07

1.) This information is part of the product key (see "6.3. Bürkert Product Enquiry Form" on page 29).

DTS 1000597497 EN Version: D Status: RL (released | freigegeben | valide) printed: 01.06.2026

valvesgo.com

4.6. Tube valve body (VP) with threaded connection

Note:

- Dimensions in mm, unless otherwise stated
- Further information on the drainage angle can be found in the "Supplementary instructions Type 2xxx 3xxx" on our website (see **operating instructions Type 2973** ▶).

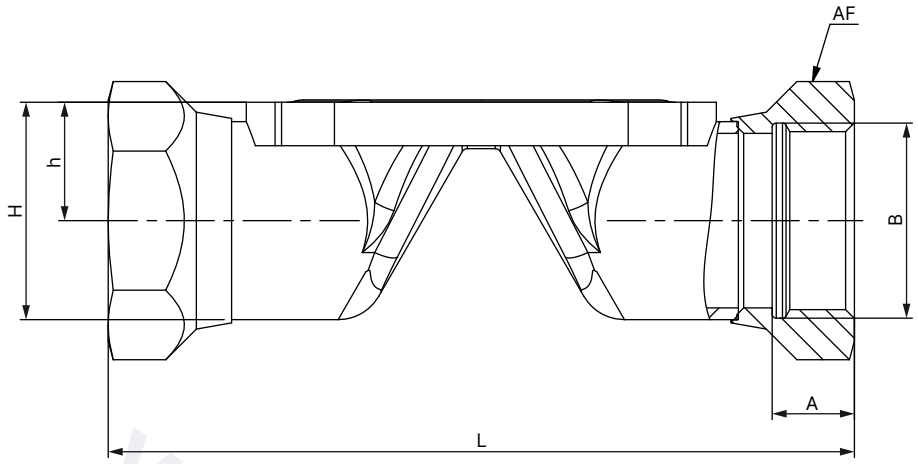

Diaphragm size	L	A	B	h	H	Width across flats of threaded ports	Product key [1.)]
15	102	14	G ½	14.35	25.0	27	GM84
20	118	12	G ¾	17.15	30.45	32	GM85
25	127	14	G 1	20.55	37.4	41	GM86
32	146	16	G 1¼	25.10	46.3	50	GM87
40	159	18	G 1½	29.35	53.5	60	GM88
50	191	20	G 2	35.35	65.50	70	GM89
Diaphragm size	**L**	**A**	**B**	**h**	**H**	**Width across flats of threaded ports**	**Product key [1.)]**
15	102	13.2	Rc ½	14.35	25.0	27	RC84
20	118	14.5	Rc ¾	17.15	30.45	32	RC85
25	127	16.8	Rc 1	20.55	37.4	41	RC86
32	146	19.1	Rc 1¼	25.10	46.3	50	RC87
40	159	19.1	Rc 1½	29.35	53.5	60	RC88
50	191	23.4	Rc 2	35.35	65.50	70	RC89
Diaphragm size	**L**	**A**	**B**	**h**	**H**	**Width across flats of threaded ports**	**Product key [1.)]**
15	102	13.7	NPT ½	14.35	25.0	27	NM84
20	118	14	NPT ¾	17.15	30.45	32	NM85
25	127	16.8	NPT 1	20.55	37.4	41	NM86
32	146	17.3	NPT 1¼	25.10	46.3	50	NM87
40	159	17.3	NPT 1½	29.35	53.5	60	NM88
50	191	17.6	NPT 2	35.35	65.50	70	NM89

1.) This information is part of the product key (see "6.3. Bürkert Product Enquiry Form" on page 29).

DTS 1000597497 EN Version: D Status: RL (released | freigegeben | valide) printed: 01.06.2026

valvesgo.com

4.7. Tube valve body (VP) with flange connection

Note:

- Dimensions in mm, unless otherwise stated
- Further information on the drainage angle can be found in the "Supplementary instructions Type 2xxx 3xxx" on our website (see **operating instructions Type 2973** ▶).

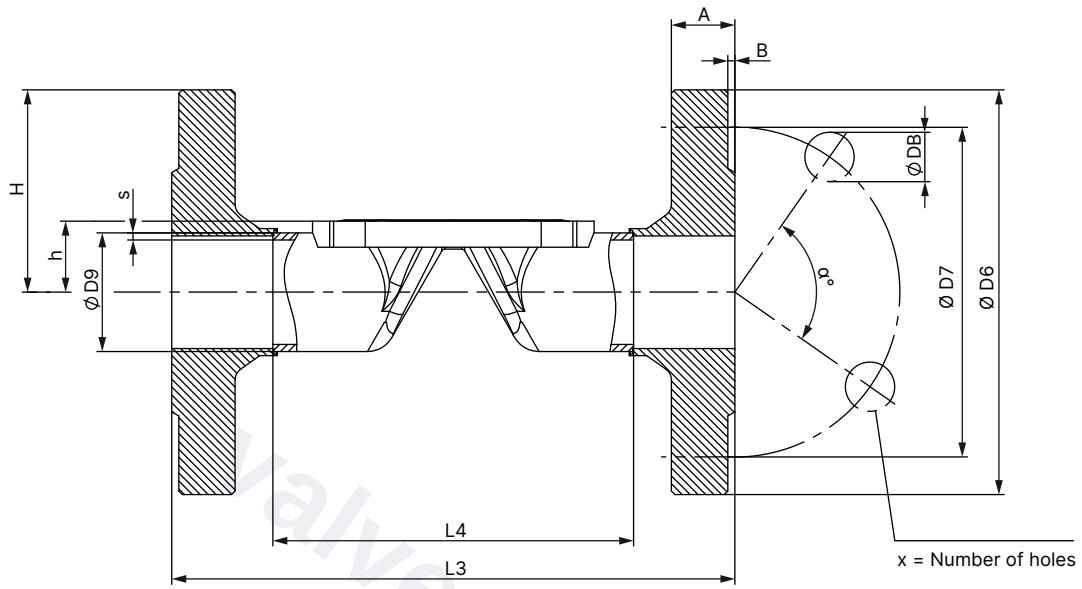

Diaphragm size	L4	L3	s	ØD9	ØD6	ØD7	a°	ØDB	A	B	X	Product key[1)]
DIN EN 1092 - 1												
15	76.5	130	1.6	21.3	95	65	90	14	16	2	4	FD22
20	92.5	150	1.6	26.9	105	75	90	14	18	2	4	FD23
25	102.5	160	2.0	33.7	115	85	90	14	18	2	4	FD24
32	122.5	180	2.0	42.4	140	100	90	18	18	2	4	FD25
40	136.5	200	2.0	48.3	150	110	90	18	18	3	4	FD26
50	160.5	230	2.0	60.3	165	125	90	18	20	3	4	FD27
ANSI B16.5												
15	67.0	130	1.6	21.3	89	60.5	90	15.7	11.2	1.6	4	FA02
20	83.0	150	1.6	26.9	99	69.9	90	15.7	12.7	1.6	4	FA03
25	106.0	160	2.0	33.7	108	79.2	90	15.7	14.2	1.6	4	FA04
40	128.0	200	2.0	48.3	127	98.6	90	15.7	17.5	1.6	4	FA06
50	151.0	230	2.0	60.3	152	120.7	90	19.1	19.1	1.6	4	FA07
JIS 10K												
15	89	130	1.6	21.3	95	70	90	15	12	1	4	FJ01
20	103	150	1.6	26.9	100	75	90	15	14	1	4	FJ02
25	116	160	2.0	33.7	125	90	90	19	14	1	4	FJ03
40	147	200	2.0	48.3	140	105	90	19	16	2	4	FJ05
50	175	230	2.0	60.3	155	120	90	19	16	2	4	FJ06

1.) This information is part of the product key (see "6.3. Bürkert Product Enquiry Form" on page 29).

DTS 1000597497 EN Version: D Status: RL (released | freigegeben | valide) printed: 01.06.2026

valvesgo.com

4.8. Cast valve body (VG) with welded connection

Note:

- Dimensions in mm, unless otherwise stated
- Further information on the drainage angle can be found in the "Supplementary instructions Type 2xxx 3xxx" on our website (see **operating instructions Type 2973** ▶).

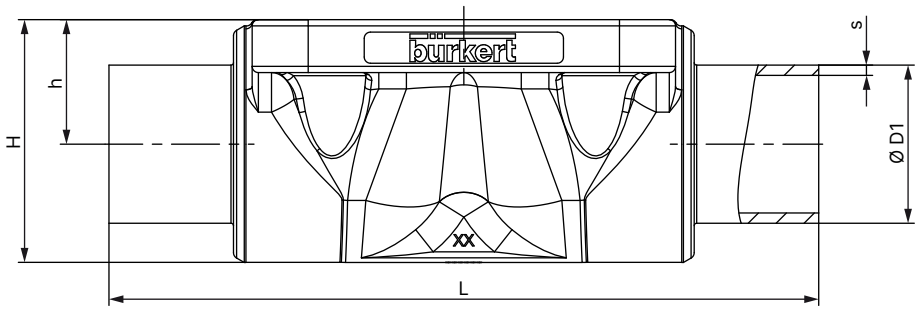

Diaphragm size	Port connection DN	Ø D1	s	L	h	H	Product key [1.)]
DIN EN ISO 1127 / ISO 4200 / DIN 11866 series B							
15	15	21.3	1.6	110	13.5	25.0	SA42
20	15	21.3	1.6	119	18.0	32.9	SA42
20	20	26.9	1.6	119	18.0	32.7	SA43
25	25	33.7	2.0	129	20.0	39.0	SA44
40	32	42.4	2.0	161	28.6	55.0	SA45
40	40	48.3	2.0	161	28.6	55.0	SA46
50	50	60.3	2.0	192	35.5	68.0	SA47
DIN 11850 - 2 / DIN 11866 series A / DIN EN 10357 series A							
15	15	19	1.5	110	13.5	25.0	SD42
20	20	23	1.5	119	18.0	32.8	SD43
25	25	29	1.5	129	20.0	39.0	SD44
40	40	41	1.5	161	28.6	55.0	SD46
50	50	53	1.5	192	35.5	68.0	SD47
ASME BPE / DIN 11866 series C							
15	¾"	19.05	1.65	102	13.5	25.0	SA93
20	¾"	19.05	1.65	119	18.0	32.8	SA93
20	1"	25.4	1.65	119	18.0	32.7	SODF
25	1"	25.4	1.65	114	20.0	39.0	SODF
40	1½"	38.1	1.65	140	28.6	55.0	SODH
50	2"	50.8	1.65	159	35.5	68.0	SODI
50	2½"	63.5	1.65	192	35.5	68.0	SODJ
BS 4825							
15	20	19.05	1.20	102	14.0	25.5	SODE
20	25	25.4	1.65	119	18.0	32.8	SODF
25	25	25.4	1.65	114	20.0	39.0	SODF
40	40	38.1	1.65	140	28.6	55.0	SODH
50	50	50.8	1.65	159	35.5	68.0	SODI
50	65	63.5	1.65	192	35.5	68.0	SODJ
SMS 3008							
20	25	25	1.2	119	18.0	32.8	SA60
25	25	25	1.2	129	20.0	39.0	SA60
40	40	38	1.2	161	28.6	55.0	SA62
50	50	51	1.2	192	35.5	68.0	SA63

DTS 1000597497 EN Version: D Status: RL (released | freigegeben | valide) printed: 01.06.2026

valvesgo.com

Diaphragm size	Port connection DN	Ø D1	s	L	h	H	Product key [1.)]
DIN 11850 - 0							
15	15	18	1.5	110	13.5	25.0	SC43
20	20	22	1.5	119	18.0	32.8	SC44
25	25	28	1.5	129	20.0	39.0	SC45
25	32	34	1.5	129	20.0	39.0	SC46
40	40	40	1.5	161	28.6	56.0	SC47
50	50	52	1.5	192	35.5	68.0	SC48

1.) This information is part of the product key (see "6.3. Bürkert Product Enquiry Form" on page 29).

DTS 1000597497 EN Version: D Status: RL (released | freigegeben | valide) printed: 01.06.2026

valvesgo.com

valvesgo.com

4.9. Cast valve body (VG) with clamp connection

Note:

- Dimensions in mm, unless otherwise stated
- Further information on the drainage angle can be found in the "Supplementary instructions Type 2xxx 3xxx" on our website (see **operating instructions Type 2973** ▶).

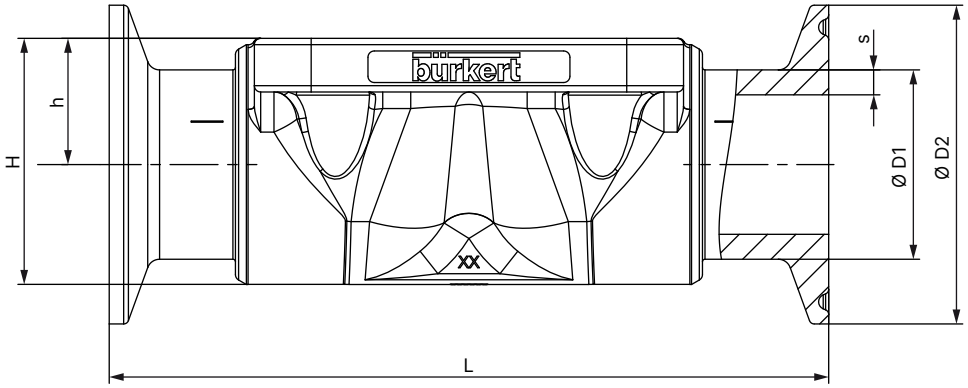

Diaphragm size	Port connection DN	Ø D1	s	Ø D2	L	h	H	Product key [1.)]
DIN 32676 series B (ISO pipe)								
25	25	33.7	2	50.5	129	20.0	39.0	TC44
40	40	48.3	2	64.0	161	28.6	55.0	TC46
50	50	60.3	2	77.5	192	35.5	68.0	TC47
DIN 32676 series A (DIN pipe)								
15	15	19	1.5	34.0	110	13.5	25.0	TD42
20	20	23	1.5	34.0	119	18.0	32.8	TD43
25	25	29	1.5	50.5	129	20.0	39.0	TD44
40	40	41	1.5	50.5	161	28.6	55.0	TD46
50	50	53	1.5	64.0	192	35.5	68.0	TD47
ASME BPE								
15	¾"	19.05	1.65	25.0	102	13.5	23.0	TG03
20	¾"	19.05	1.65	25.0	117	18.0	25.0	TG03
25	1"	25.4	1.65	50.5	114	18.0	40.0	TG04
40	1½"	38.1	1.65	50.5	140	28.6	55.0	TG05
50	2"	50.8	1.65	64.0	159	35.5	68.0	TG06
50	2½"	63.5	1.65	77.5	190	35.5	68.0	TG07
BS 4825: Clamp BS 4825 - 3 / pipe BS 4825 - 1								
15	20	19.05	1.2	25	102	13.5	25.0	TH43
25	25	25.4	1.65	50.5	114	20.0	39.0	TG04
40	40	38.1	1.65	50.5	140	28.6	55.0	TG05
50	50	50.8	1.65	64.0	159	35.5	68.0	TG06
50	65	63.5	1.65	77.5	190	35.5	68.0	TG07
Clamp 34.0 similar to DIN 32676 series B (ISO pipe)								
15	15	21.3	1.6	34	110	13.5	25.0	TC42

1.) This information is part of the product key (see "6.3. Bürkert Product Enquiry Form" on page 29).

DTS 1000597497 EN Version: D Status: RL (released | freigegeben | valide) printed: 01.06.2026

valvesgo.com

4.10. Plastic valve body (PV, PP, PD) with spigot connection

Note:

- Dimensions in mm. unless otherwise stated
- The specified values refer to the new plastic body. The previous bodies (REV1) may differ slightly from the new dimensions.

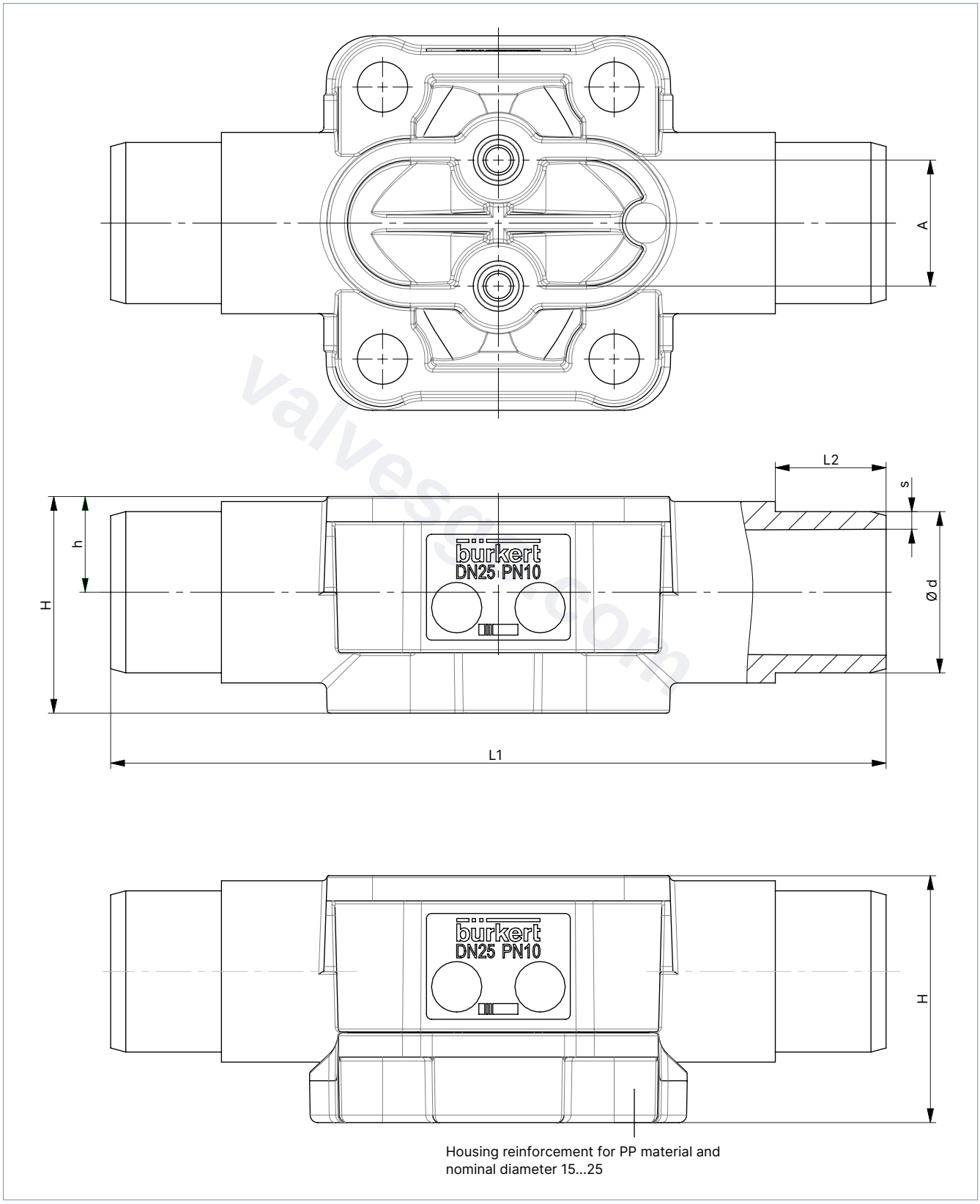

DTS 1000597497 EN Version: D Status: RL (released | freigegeben | valide) printed: 01.06.2026

valvesgo.com

Diaphragm size	A	L1	L2	Ø d	s	h	H	Product key [1.)]
PP (PP)								
15	25	124	16	20	2.5	12	33	SS25
20	25	144	19	25	2.5	17	42	SS26
25	25	154	22	32	3.5	19	49	SS27
32	45	174	26	40	4	25	52.5	SS28
40	45	194	31	50	5	28.6	65.5	SS29
50	45	224	44	63	6.5	35.5	79	SS30
PVDF (PD)								
15	25	124	16	20	2.5	12	29	SS25
20	25	144	19	25	2.5	17	36	SS26
25	25	154	22	32	3.5	19	43	SS27
32	45	174	26	40	4	25	52.5	SS28
40	45	194	31	50	5	28.6	65.5	SS29
50	45	224	44	63	6.5	35.5	79	SS30
PVC-U (PV)								
15	25	124	16	20	2.5	12	29	KS25
20	25	144	19	25	2.5	17	36	KS26
25	25	154	22	32	3.5	19	43	KS27
32	45	174	26	40	4	25	52.5	KS28
40	45	194	31	50	5	28.6	65.5	KS29
50	45	224	44	63	6.5	35.5	79	KS30

1.) This information is part of the product key (see "6.3. Bürkert Product Enquiry Form" on page 29).

DTS 1000597497 EN Version: D Status: RL (released | freigegeben | valide) printed: 01.06.2026

valvesgo.com

valvesgo.com

4.11. Plastic valve body (PW, PV, PP, PD) with true union

Note:

- Dimensions in mm. unless otherwise stated
- The specified values refer to the new plastic body. The previous bodies (REV1) may differ slightly from the new dimensions.

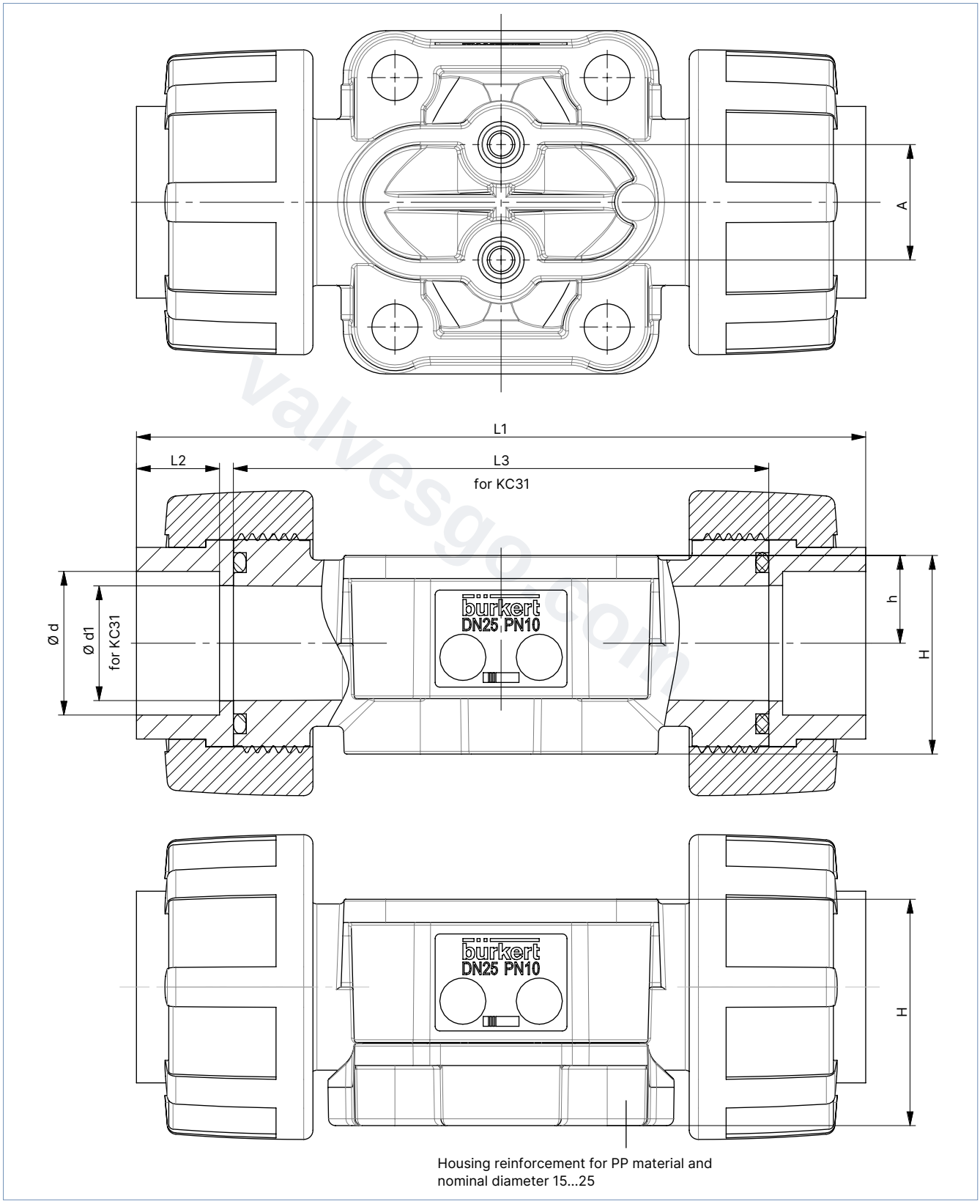

DTS 1000597497 EN Version: D Status: RL (released | freigegeben | valide) printed: 01.06.2026

valvesgo.com

Diaphragm size	A	L1	L2	L3	Ø d	Ø d1	h	H	Product key [1)]	Variable code
PP (PP)										
15	25	125	14.5	–	19.2	–	12	33	SM25	–
20	25	146	16	–	24.2	–	17	42	SM26	
25	25	158	18	–	31.1	–	19	49	SM27	
32	45	181	20.5	–	39	–	25	52.5	SM28	
40	45	207	23.5	–	48.9	–	28.6	65.5	SM29	
50	45	245	27.5	–	61.6	–	35.5	79	SM30	
15	25	–	–	90	–	14.9	12	33	SM25	KC31 line connection without insert part, O-ring and union nut
20	25	–	–	108	–	19.9	17	42	SM26	
25	25	–	–	116	–	24.9	19	49	SM27	
32	45	–	–	134	–	31.9	25	52.5	SM28	
40	45	–	–	154	–	39.9	28.6	65.5	SM29	
50	45	–	–	184	–	49.9	35.5	79	SM30	
15	25	132	18	–	20	–	12	33	KM25	Optionally available with variable code KC93 insert part made of PVC-C
20	25	156	21	–	25	–	17	42	KM26	
25	25	170	24	–	32	–	19	49	KM27	
32	45	196	28	–	40	–	25	52.5	KM28	
40	45	222	31	–	50	–	28.6	65.5	KM29	
50	45	266	38	–	63	–	35.5	79	KM30	
PVDF (PD)										
15	25	125	14.5	–	19.2	–	12	29	SM25	–
20	25	146	16	–	24.2	–	17	36	SM26	
25	25	158	18	–	31.1	–	19	43	SM27	
32	45	181	20.5	–	39	–	25	52.5	SM28	
40	45	207	23.5	–	48.9	–	28.6	65.5	SM29	
50	45	245	27.5	–	61.6	–	35.5	79	SM30	
15	25	–	–	90	–	14.9	12	29	SM25	KC31 line connection without insert part, O-ring and union nut
20	25	–	–	108	–	19.9	17	36	SM26	
25	25	–	–	116	–	24.9	19	43	SM27	
32	45	–	–	134	–	31.9	25	52.5	SM28	
40	45	–	–	154	–	39.9	28.6	65.5	SM29	
50	45	–	–	184	–	49.9	35.5	79	SM30	
15	25	132	18	–	20	–	12	29	KM25	Optionally available with variable code KC93 insert part made of PVC-C
20	25	156	21	–	25	–	17	36	KM26	
25	25	170	24	–	32	–	19	43	KM27	
32	45	196	28	–	40	–	25	52.5	KM28	
40	45	222	31	–	50	–	28.6	65.5	KM29	
50	45	266	38	–	63	–	35.5	79	KM30	

DTS 1000597497 EN Version: D Status: RL (released | freigegeben | valide) printed: 01.06.2026

valvesgo.com

valvesgo.com

PVC-U (PV)										
15	25	128	16	–	20	–	12	29	KM25	–
20	25	152	19	–	25	–	17	36	KM26	
25	25	166	22	–	32	–	19	43	KM27	
32	45	192	26	–	40	–	25	52.5	KM28	
40	45	222	31	–	50	–	28.6	65.5	KM29	
50	45	266	38	–	63	–	35.5	79	KM30	
15	25	–	–	90	–	14.9	12	29	KM25	KC31 line connection without insert part, O-ring and union nut
20	25	–	–	108	–	19.9	17	36	KM26	
25	25	–	–	116	–	24.9	19	43	KM27	
32	45	–	–	134	–	31.9	25	52.5	KM28	
40	45	–	–	154	–	39.9	28.6	65.5	KM29	
50	45	–	–	184	–	49.9	35.5	79	KM30	
15	25	140.6	22.3	–	21.5	–	12	29	KM41	–
20	25	164.8	25.4	–	26.7	–	17	36	KM42	
25	25	179.2	28.6	–	33.5	–	19	43	KM43	
32	45	203.6	31.8	–	42.3	–	25	52.5	KM44	
40	45	230	35	–	48.6	–	28.6	65.5	KM45	
50	45	266.2	38.1	–	60.6	–	35.5	79	KM46	
PVC-C (PW)										
15	25	–	–	90	–	14.9	12	29	KM25	KC31 line connection without insert part, O-ring and union nut
20	25	–	–	108	–	19.9	17	36	KM26	
25	25	–	–	116	–	24.9	19	43	KM27	
32	45	–	–	134	–	31.9	25	52.5	KM28	
40	45	–	–	154	–	39.9	28.6	65.5	KM29	
50	45	–	–	184	–	49.9	35.5	79	KM30	
15	25	132	18	–	20	–	12	29	KM25	–
20	25	156	21	–	25	–	17	36	KM26	
25	25	170	24	–	32	–	19	43	KM27	
32	45	196	28	–	40	–	25	52.5	KM28	
40	45	222	31	–	50	–	28.6	65.5	KM29	
50	45	266	38	–	63	–	35.5	79	KM30	

1.) This information is part of the product key (see "6.3. Bürkert Product Enquiry Form" on page 29).

DTS 1000597497 EN Version: D Status: RL (released | freigegeben | valide) printed: 01.06.2026

valvesgo.com

valvesgo.com

4.12. Plastic valve body (PV, PP, PD) with flange connection

Note:

- Dimensions in mm. unless otherwise stated
- The specified values refer to the new plastic body. The previous bodies (REV1) may differ slightly from the new dimensions.

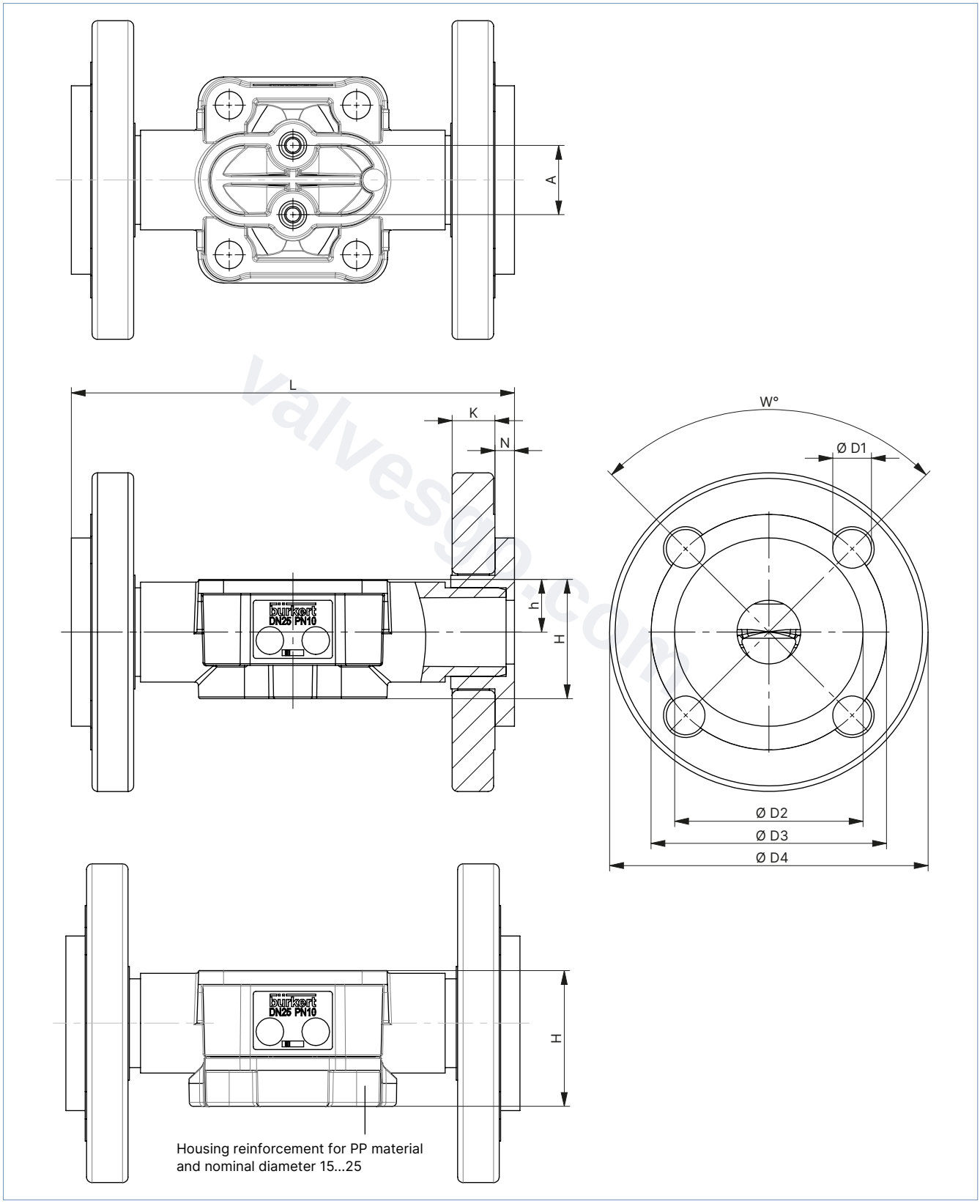

DTS 1000597497 EN Version: D Status: RL (released | freigegeben | valide) printed: 01.06.2026

valvesgo.com

Diaphragm size	A	L	K	N	h	H	W°	Ø D1	Ø D2	Ø D3	Ø D4	Product key [1.)]
PP (PP)												
15	25	134	13.5	7	12	33	90	4×14	45	65	95	FL24
20	25	154	14.5	7	17	42	90	4×14	54	75	105	FL25
25	25	164	15.5	7	19	49	90	4×14	63	85	115	FL26
32	45	184	17.5	8	25	52.5	90	4×18	73	100	140	FL27
40	45	204	17.5	8	28.6	65.5	90	4×18	82	110	150	FL28
50	45	234	19.5	14	35.5	79	90	4×18	102	125	166	FL29
PVDF (PD)												
15	25	130	13.5	6	12	29	90	4×14	45	65	95	FL24
20	25	150	14.5	7	17	36	90	4×14	58	75	105	FL25
25	25	160	15.5	7	19	43	90	4×14	68	85	115	FL26
32	45	180	17.5	8	25	52.5	90	4×18	78	100	140	FL27
40	45	200	17.5	8	28.6	65.5	90	4×18	88	110	150	FL28
50	45	230	19.5	9	35.5	79	90	4×18	102	125	166	FL29
PVC-U (PV)												
15	25	130	13.5	6	12	29	90	4×14	34	65	95	FL24
20	25	150	14.5	7	17	36	90	4×14	41	75	105	FL25
25	25	160	15.5	7	19	43	90	4×14	50	85	115	FL26
32	45	180	17.5	8	25	52.5	90	4×18	61	100	140	FL27
40	45	200	17.5	8	28.6	65.5	90	4×18	73	110	150	FL28
50	45	230	19.5	9	35.5	79	90	4×18	90	125	166	FL29

1.) This information is part of the product key (see "6.3. Bürkert Product Enquiry Form" on page 29).

valvesgo.com

DTS 1000597497 EN Version: D Status: RL (released | freigegeben | valide) printed: 01.06.2026

valvesgo.com

5. Performance specifications

5.1. Flow characteristics

Note:

- The K_V values may vary slightly for different diaphragm materials.
- Further K_V values are available on request.
- Flow: K_V value water (m^3/h) for elastomer diaphragms
- Measurement at + 20 °C, 4 bar at valve inlet and 3 bar at valve outlet

Forged steel valve body (VS)

Diaphragm size	Port connection		K_V value water					
			DIN EN ISO 1127 ISO 4200 DIN 11866 series B	DIN 11850 - 2 DIN 11866 series A DIN EN 10357 series A	ASME BPE DIN 11866 series C	DIN 11850 - 0	BS4825	SMS 3008
	[mm]	[inch]	[m³/h]	[m³/h]	[m³/h]	[m³/h]	[m³/h]	[m³/h]
15	10	⅜	5.5	3.5	–	–	–	–
15	15	½	6.5	6.5	3.1	–	3.7	–
15	20	¾	–	–	6.5	–	–	–
20	20	¾	12.5	12.4	8.4	–	8.9	–
25	25	1	18	20	15.5	–	15.5	16
40	32	1¼	–	34	–	–	–	–
40	40	1½	41	40	37	–	37	38
50	50	2	66	66	66	–	66	66
50	65	2½	–	–	66	–	66	66

Tube valve body (VP)

Diaphragm size	Port connection		K_V value water		
			DIN EN ISO 1127 ISO 4200 DIN 11866 series B	DIN 11850 - 2 DIN 11866 series A DIN EN 10357 series A	ASME BPE DIN 11866 series C
	[mm]	[inch]	[m³/h]	[m³/h]	[m³/h]
15	15	½	7.2	7.4	–
15	20	¾	–	7.4	7.1
20	20	¾	13.5	–	–
20	25	1	–	14.9	12.8
25	32	1¼	–	22.3	–
25	25	1	20.8	–	–
32	32	1¼	36	–	–
32	40	1½	–	34.8	31
40	40	1½	47.9	–	–
40	50	2	–	46.2	43
50	50	2	69.7	–	–
50	65	2½	–	–	60

Cast valve body (VG)

Diaphragm size	Port connection		K_V value water
	[mm]	[inch]	[m³/h]
15	15	½	5.6
20	20	¾	10.7
25	25	1	14.6
40	40	1½	35
50	50	2	47

DTS 1000597497 EN Version: D Status: RL (released | freigegeben | valide) printed: 01.06.2026

valvesgo.com

valvesgo.com

Plastic valve body (PW, PV, PP, PD)

Diaphragm size	Seal material	Port connection		K_V value water
		[mm]	[inch]	[m³/h]
15	EPDM	15	½	8.1
	PTFE			7.5
20	EPDM	20	¾	14.1
	PTFE			13.1
25	EPDM	25	1	25.5
	PTFE			21.5
32	EPDM	32	1¼	38.5
	PTFE			37.5
40	EPDM	40	1½	57
	PTFE			56
50	EPDM	50	2	92
	PTFE			92

5.2. Medium pressure

Note:

- The following tightening torques refer to the static media pressures specified above. Excessive torque can shorten the service life of the diaphragm.
- Pressure data [bar]: Overpressure to atmospheric pressure. Static: When closed, the valve is pressurised on one side with the maximum operating pressure.
- A tolerance of + 10 % applies to the tightening torques specified.

Diaphragm size	Maximum static operating pressure	Tightening torque for maximum static operating pressure	
		EPDM, FKM	PTFE/EPDM, advanced PTFE/EPDM, laminate of GYLON® and EPDM
	[bar]	[Nm]	[Nm]
15	10	0.8	1.7
20	10	0.9	3
25	10	1.2	3.5
32	10	2.5	4
40	10	4.5	7
50	10	6	11

DTS 1000597497 EN Version: D Status: RL (released | freigegeben | valide) printed: 01.06.2026

valvesgo.com

valvesgo.com

5.3. Pressure temperature diagram for plastic body

Note:
This information is important for material selection. Observe the permissible operating pressure depending on the medium temperature.

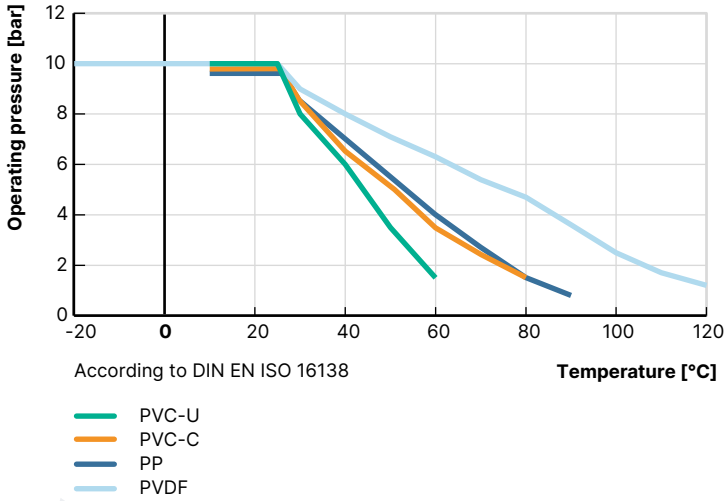

DTS 1000597497 EN Version: D Status: RL (released | freigegeben | valide) printed: 01.06.2026

valvesgo.com

valvesgo.com

6. Ordering information

6.1. Bürkert eShop

Bürkert eShop – Easy ordering and quick delivery

You want to find your desired Bürkert product or spare part quickly and order directly? Our online shop is available for you 24/7. Sign up and enjoy all the benefits.

Order online now

6.2. Bürkert product filter

Bürkert product filter – Get quickly to the right product

You want to select products comfortably based on your technical requirements?
Use the Bürkert product filter and find suitable articles for your application quickly and easily.

Try out our product filter

6.3. Bürkert Product Enquiry Form

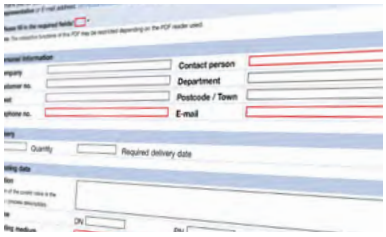

Bürkert Product Enquiry Form – Your enquiry quickly and compactly

Would you like to make a specific product enquiry based on your technical requirements? Use our Product Enquiry Form for this purpose. There you will find all the relevant information for your Bürkert contact. This will enable us to provide you with the best possible advice.

Fill out the form now

DTS 1000597497 EN Version: D Status: RL (released | freigegeben | valide) printed: 01.06.2026

valvesgo.com