bürkert
FLUID CONTROL SYSTEMS

Pneumatically operated 2/2-way angle seat valve with stainless steel actuator

- Flow optimised stainless steel body with various line connections
- Trusted components for the longest life time
- Stainless steel actuator suitable for demanding environments
- Modular accessory program with stroke limitation and position feedback available

Product variants described in the data sheet may differ from the product presentation and description.

Can be combined with

Type 8640
Modular valve island for pneumatics

Type 8644
AirLINE SP electropneumatic automation system

Type 8697
Pneumatic control unit for decentralised automation of process valves ELEMENT

Type description

The pneumatically operated angle seat valve with stainless steel actuators fulfils the demands of tough process environments. Unrivalled life time and sealing integrity is guaranteed by the trusted self-adjusting packing gland. The stainless steel actuator has been designed for tough applications. Laser welding ensures it is both cleanable and robust. With a ducted exhaust air port, the actuator can be operated isolated from the environment to guarantee an optimum life time and hygiene. High flow rates are attained with the optimised stainless steel angle seat body. As part of the Bürkert process valve range a large accessory program is available. All wetted parts comply with the EC Directive 1935/2004, variants with FDA conformity are available on request, also explosion proof variants are available.

Refer to both available data sheets for Type 2060:

- Pneumatically operated 2/2-way angle seat valve INOX (new actuator generation)
- Pneumatically operated 2/2-way angle seat valve with stainless steel actuator (previous actuator generation)

DTS 1000290882 EN Version: A Status: RL (released | freigegeben | valide) printed: 13.10.2026

© Christian Bürkert GmbH & Co. KG, Subject to alteration

valvesgo.com

Table of contents

1. General technical data 3

2. Control functions 4

3. Approvals and conformities 5

3.1. General notes 5
3.2. Conformity 5
3.3. Standards 5
3.4. Explosion protection 5
3.5. Drinking water 5
3.6. Foods and beverages/Hygiene 6
3.7. Others 6
DNV classification 6
TA Luft 6

4. Materials 6

4.1. Bürkert resistApp 6
4.2. Material specifications 7

5. Dimensions 8

5.1. Actuator 8
Angle seat valve Type 2060 8
Valve system on/off ELEMENT Type 8801-YV 9
5.2. Body with threaded connection 10
5.3. Body with welded connection 11
5.4. Body with clamp connection 12

6. Performance specifications 13

6.1. Fluidic data 13
Overview of fluidic data for flow below seat (for liquids, steam and gases) 13
Pilot pressure diagrams with flow direction below seat (control function B, seat seal PTFE) 17
Overview of fluidic data with flow above seat (for gases and steam) 18
Pilot pressure diagram with flow direction above seat (control function A) 19
6.2. Operating limits 20
Operating limits for medium temperature and operating pressure 20
Operating limits for ambient and medium temperature 21
Operating limits for optional variants 21

7. Product accessories 22

8. Networking and combination with other Bürkert products 23

9. Ordering information 24

9.1. Bürkert eShop 24
9.2. Bürkert product filter 24
9.3. Bürkert Product Enquiry Form 24
9.4. Ordering chart welded connection 25
Valve with flow direction below seat 25
Valves with flow direction above seat 28
9.5. Ordering chart accessories 28

DTS 1000290882 EN Version: A Status: RL (released | freigegeben | valide) printed: 13.10.2026

valvesgo.com

1. General technical data

Product properties	
Dimensions	Further information can be found in chapter "5. Dimensions" on page 8.
Material	Further information can be found in chapter "4. Materials" on page 6.
Design	Angle seat valve
Nominal diameter (port connection)	DN 10...DN 80, NPS ⅜...NPS 3
Safety setting in case of power failure	Normally closed (control function A), normally open (control function B)
Flow direction	Flow to open (below seat), flow to close (above seat)
Performance data	
Operating pressure	0 bar(g)...25 bar(g), vaccum variants...- 0.9 bar(g) (option) (see "6.1. Fluidic data" on page 13)
Nominal pressure	PN 25 (DIN EN 1333), Class 150 (DIN EN 1759)
Pilot pressure	2...10.5 bar(g) Actuator size B: 2...7 bar (g) (see "6.1. Fluidic data" on page 13)
Seat leakage	Leakage rate A (DIN EN 12266 - 1), seat seal PTFE and PEEK, test medium air
K_V value	1.6...140 m^3/h (see "6.1. Fluidic data" on page 13)
Medium data	
Medium	Steam, water, neutral gases, alcohols, oils, fuels, hydraulic fluids, salt solutions, alkalis, organic solvents
Medium temperature	- 40 °C...+ 230 °C (see "6.2. Operating limits" on page 20)
Viscosity	Max. 600 mm^2/s
Control medium	Air, neutral gases
Product connections	
Port Connection [1.)]	
Threaded connection	G (DIN ISO 228 - 1) NPT (ASME B1.20.1) RC (ISO 7 - 1)
Welded connection	DIN EN ISO 1127 / ISO 4200 / DIN 11866 series B DIN 11850 - 2 / DIN 11866 series A ASME BPE / DIN 11866 series C SMS 3008
Clamp connection	DIN 32676 series B (pipe: ISO 4200) DIN 32676 series A (pipe: DIN 11850 - 2) ASME BPE
Pilot air port	
Actuator size Ø 50 (D)...130 (P)	Thread G ⅛
Actuator size Ø 32 (B)	Thread M5
Approvals and certificates	
Further information can be found in chapter "3. Approvals and conformities" on page 5.	
Material certificate	2.2, 3.1
Environment and installation	
Environmental factors	Protect the device from electromagnetic interference, UV radiation and, when used outdoors, from weather conditions.
Ambient temperature	- 10 °C...+ 130 °C (see "6.2. Operating limits" on page 20)
Degree of protection	IP65/67
Installation position	As required, preferably with actuator upright

1.) Others are available on request.

DTS 1000290882 EN Version: A Status: RL (released | freigegeben | valide) printed: 13.10.2026

valvesgo.com

2. Control functions

⚠ WARNING

Risk of damage due to bursting pipes and bursting equipment when the flow is above the seat.
In the case of liquid mediums, water hammer can occur causing pipes and the device to burst.

Do not use valves with flow above the seat for liquid mediums..

Symbol	Description	
Flow direction below seat for liquids, steam and gases		
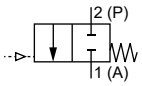	**Control function A (CF A)** Pneumatically operated 2/2-way on/off valve Flow direction below seat Normally closed by spring force	
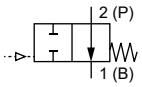	**Control function B (CF B)** Pneumatically operated 2/2-way on/off valve Flow direction below seat Normally opened by spring force	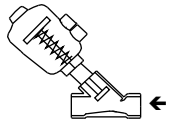
Flow direction above seat for steam and gases		
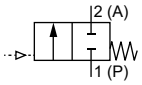	**Control function A (CF A)** Pneumatically operated 2/2-way on/off valve Flow direction above seat Normally closed by spring force	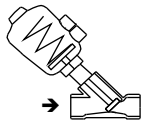

DTS 1000290882 EN Version: A Status: RL (released | freigegeben | valide) printed: 13.10.2026

valvesgo.com

valvesgo.com

3. Approvals and conformities

3.1. General notes

- The approvals and conformities listed below must be stated when making enquiries. This is the only way to ensure that the product complies with all required specifications.
- Not all available variants can be supplied with the below mentioned approvals or conformities.

3.2. Conformity

In accordance with the Declaration of Conformity, the product is compliant with the EU Directives. This includes the following directives:

- Pressure Equipment Directive 2014/68/EU
- Machinery Directive 2006/42/EC

3.3. Standards

The applied standards which are used to demonstrate compliance with the EU Directives are listed in the EU-Type Examination Certificate and/or the EU Declaration of Conformity.

3.4. Explosion protection

Approval	Description
	Optional: Explosion protection (valid for the variable code PX51) As a category 2 device suitable for zone 1/21 and zone 2/22. **ATEX:** EPS 18 ATEX 2 008 X II 2G Ex h IIC T4...T2 Gb II 2D Ex h IIIC T135 °C...T300 °C Db **IECEx:** IECEx EPS 18.0007X Ex h IIC T4...T2 Gb Ex h IIIC T135 °C...T300 °C Db

Temperature class	T2	T3	T4
Maximum surface temperature	+ 300 °C	+ 200 °C	+ 135 °C
Ambient temperature	- 40 °C...+ 130 °C	- 40 °C...+ 130 °C	- 40 °C...+ 100 °C
Maximum medium temperature	+ 285 °C	+ 185 °C	+ 125 °C

Note: The ambient and medium temperature range may be limited by non-ex-relevant specifications. Observe the Operating Instructions.

3.5. Drinking water

Conformity	Description
H_2O	**Suitable for use in drinking water applications** The materials comply with the assessment principles (UBA) for materials in contact with drinking water (TrinkwasserV). **Stainless steel body** PF39: Suitable for products with medium temperature up to +85 °C (hot water)

DTS 1000290882 EN Version: A Status: RL (released | freigegeben | valide) printed: 13.10.2026

valvesgo.com

3.6. Foods and beverages/Hygiene

Conformity	Description
FDA	**FDA – Code of Federal Regulations (valid for the variable code PL02, PL03)** All wetted materials are compliant with the Code of Federal Regulations published by the FDA (Food and Drug Administration, USA) according to the manufacturer's declaration.
	EC Regulation 1935/2004 of the European Parliament and of the Council (valid for the variable code PL01, PL02) All wetted materials are compliant with EC Regulation 1935/2004/EC according to the manufacturer's declaration.
	China food GB Standards of the People's Republic of China (valid for the variable code PL10) All wetted materials are compliant with the requirement of China food GB Standards according to the manufacturer's declaration.

3.7. Others

DNV classification

Approval	Description
TYPE APPROVED PRODUCT DNV DNV.COM/AF	**DNV classification – Ships, offshore units, and high speed and light craft** The products are accepted for installation on all vessels classed by DNV.

TA Luft

Conformity	Description
TA Luft	**Technical instruction on air quality control (valid for the variable code PM01)**

4. Materials

4.1. Bürkert resistApp

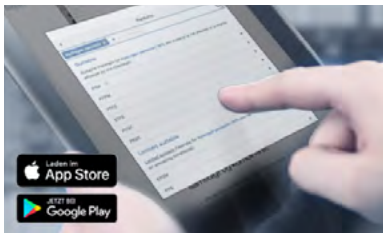

Bürkert resistApp – Chemical resistance chart

You want to ensure the reliability and durability of the materials in your individual application case? Verify your combination of media and materials on our website or in our resistApp.

Start chemical resistance check

DTS 1000290882 EN Version: A Status: RL (released | freigegeben | valide) printed: 13.10.2026

valvesgo.com

4.2. Material specifications

Actuator size 50 (D), 70 (M), 90 (N), 130 (P)

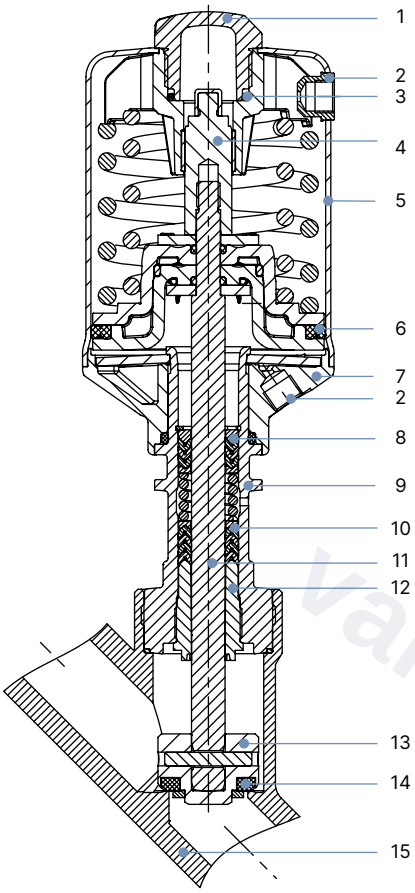

No.	Element	Material
1	Transparent cover	Optical position indicator Polysulfone PSU
2	Pilot air ports	Threaded bushing G ⅛" Stainless steel 1.4404 (316L)
3	Spring support	Stainless steel 1.4308
4	Spindle extension	Stainless steel 1.4104
5	Actuator casing	Stainless steel 1.4404 (316L)
6	Piston seal	FKM
7	Actuator base (interface)	Stainless steel 1.4308
8	Spring	Stainless steel 1.4310
9	Pipe	Stainless steel 1.4401 (316)/1.4404 (316L)
10	Packing gland	PTFE V-Rings (filled), with spring compensation
11	Spindle	Stainless steel 1.4401 (316)/1.4404 (316L)
12	Spindle guide	PTFE (filled) for actuator size 50(D)/PEEK for actuator size 70(M), 90(N), 130(P)
13	Swivel plate	Stainless steel 1.4401 (316)/1.4404 (316L)
14	Seat seal	PTFE, PEEK (optional), NBR (optional), FKM (optional)
15	Valve body	Stainless steel CF3M

Actuator size 32 (B)

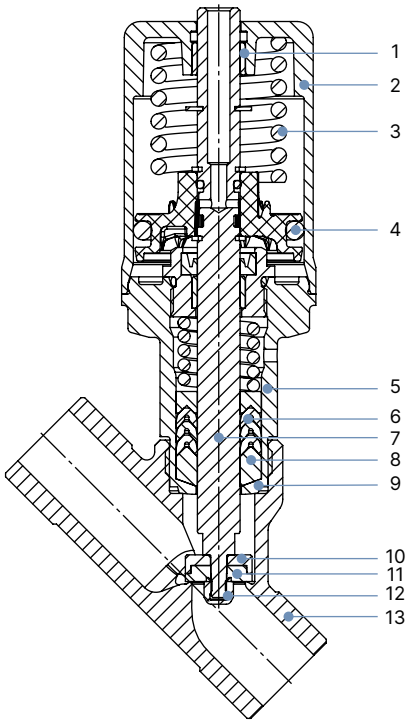

No.	Element	Material
1	Optical position indicator/ Pilot air ports	Stainless steel 1.4104 Thread M5
2	Actuator casing	Stainless steel 1.4404
3	Spring	1.4310
4	Piston seal	FPM
5	Pipe	Stainless steel 1.4404
6	Packing gland	PTFE V-Rings (filled) with spring compensation
7	Spindle	Stainless steel 1.4404
8	Wiper	PTFE (filled)
9	Body seal	Graphite
10	Seal holder	Stainless steel 1.4404
11	Seat seal	PTFE
12	Dome nut	Stainless steel 1.4404
13	Body	Stainless steel CF3M

DTS 1000290882 EN Version: A Status: RL (released | freigegeben | valide) printed: 13.10.2026

valvesgo.com

valvesgo.com

5. Dimensions

5.1. Actuator

Angle seat valve Type 2060

Note:
Dimensions in mm, unless otherwise stated

Actuator size 50 (D)...130 (P)	Actuator size 32 (B)
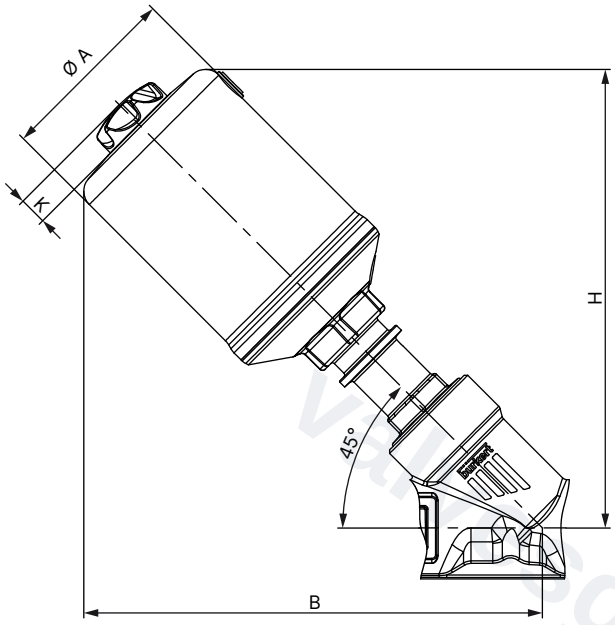	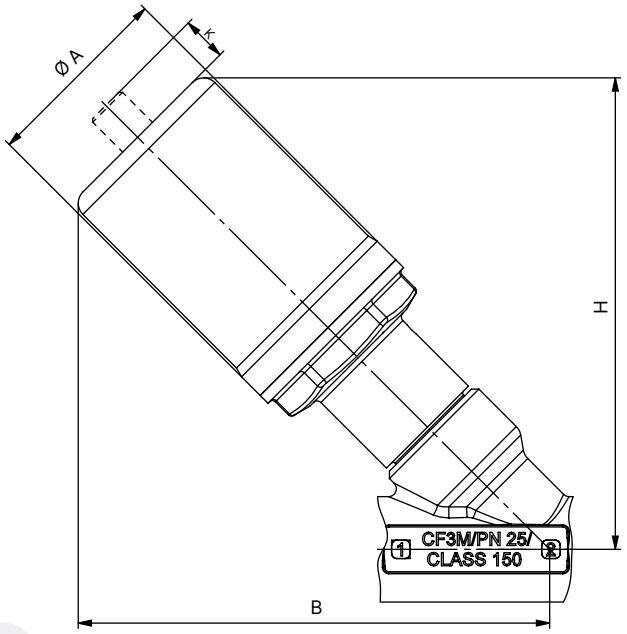

Nominal diameter (port connection)		Actuator size Ø	Ø A	B/H [1.)]	K [1.)]	P
DN	NPS					
10	⅜	32 (B)	36.4	89.4	8.6	M5
15	½	32 (B)	36.4	96	8.6	M5
		50 (D)	55	154	11	G ⅛
		70 (M)	75	174	11	G ⅛
20	¾	50 (D)	55	157	11	G ⅛
		70 (M)	75	180	11	G ⅛
25	1	50 (D)	55	169	11	G ⅛
		70 (M)	75	184	11	G ⅛
		90 (N)	96	233	14	G ⅛
32	1¼	70 (M)	75	193	11	G ⅛
		90 (N)	96	238	14	G ⅛
		130 (P)	137	283	14	G ⅛
40	1½	70 (M)	75	196	11	G ⅛
		90 (N)	96	242	14	G ⅛
		130 (P)	137	286	14	G ⅛
50	2	70 (M)	75	214	11	G ⅛
		90 (N)	96	257	14	G ⅛
		130 (P)	137	301	14	G ⅛
65	2½	90 (N)	96	269	11	G ⅛
		130 (P)	137	314	14	G ⅛
80	3	130 (P)	137	334	14	G ⅛

1.) The dimensions for B, H and K are maximum dimensions and may be up to 6 mm less, depending on the connection orifice size and standard.

DTS 1000290882 EN Version: A Status: RL (released | freigegeben | valide) printed: 13.10.2026

valvesgo.com

DTS 1000290882 EN Version: A Status: RL (released | freigegeben | valide) printed: 13.10.2026

Valve system on/off ELEMENT Type 8801-YV

Note:
Dimensions in mm, unless otherwise stated

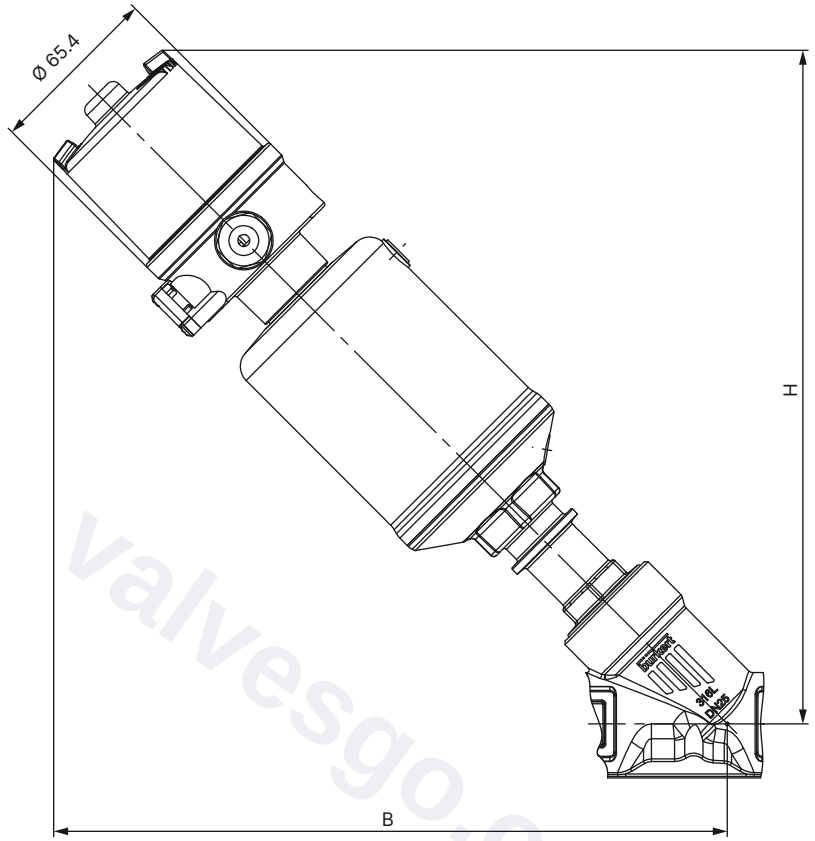

Nominal diameter (port connection)		Actuator size Ø	B/H [1.)]
DN	NPS		
15	½	50 (D)	230
		70 (M)	244
20	¾	50 (D)	233
		70 (M)	250
25	1	50 (D)	245
		70 (M)	254
		90 (N)	287
32	1¼	70 (M)	263
		90 (N)	301
		130 (P)	332
40	1½	70 (M)	266
		90 (N)	305
		130 (P)	335
50	2	70 (M)	284
		90 (N)	320
		130 (P)	350
65	2½	90 (N)	332
		130 (P)	363
80	3	130 (P)	383

1.) The dimensions for B, H and K are maximum dimensions and may be up to 6 mm less, depending on the connection orifice size and standard.

valvesgo.com

5.2. Body with threaded connection

Note:
Dimensions in mm, unless otherwise stated

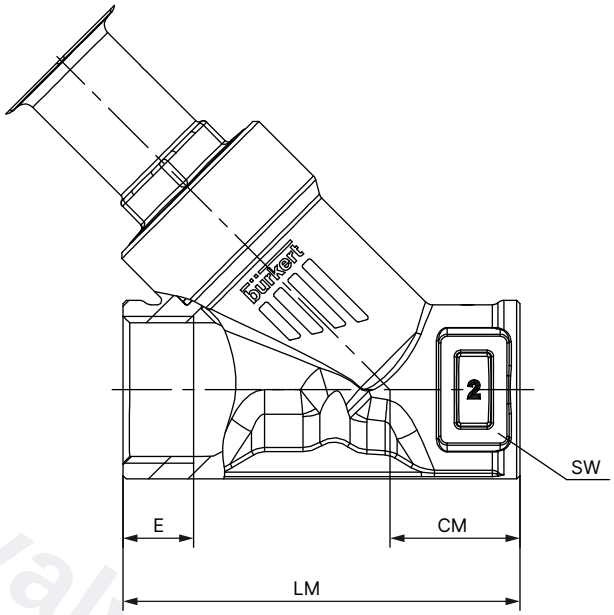

Nominal diameter (port connection)		G (DIN ISO 228 - 1) NPT (ASME B1.20.1) RC (ISO 7 - 1)					
		E			CM	LM	SW
DN	NPS	G	NPT	RC			
10	⅜	12	10.3	10.1	18.5	65	–
15	½	14	13.7	13.2	24	65	27
20	¾	16	14.0	14.5	27	75	34
25	1	18	16.8	16.8	29.5	90	41
32	1¼	16	17.3	19.1	36	110	50
40	1½	18	17.3	19.1	35	120	55
50	2	24	17.6	23.4	45	150	70
65	2½	26	23.7	26.7	57	185	85
80	3	28	–	–	71	220	100

DTS 1000290882 EN Version: A Status: RL (released | freigegeben | valide) printed: 13.10.2026

valvesgo.com

5.3. Body with welded connection

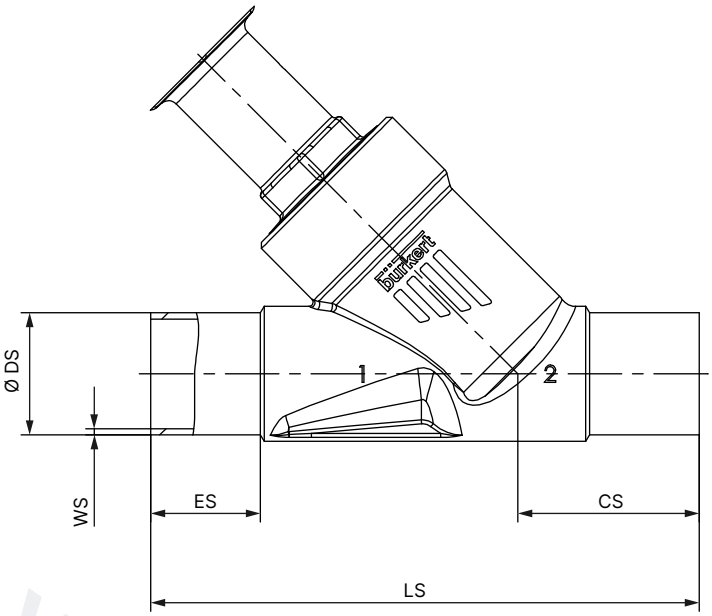

Nominal diameter (port connection)	DIN EN ISO 1127 / ISO 4200 / DIN 11866 series B					DIN 11850 - 2 / DIN 11866 series A				
DN	ES	CS	LS	Ø DS	WS	ES	CS	LS	Ø DS	WS
10	20	26	80	17.2	1.6	20	26	80	13	1.5
15	19	34	100	21.3	1.6	19	34	100	19	1.5
20	20	39	115	26.9	1.6	20	39	115	23	1.5
25	26	43	130	33.7	2.0	26	43	130	29	1.5
32	26	45	145	42.4	2.0	26	45	145	35	1.5
40	26	49	160	48.3	2.0	26	49	160	41	1.5
50	26	50	175	60.3	2.0	26	50	175	53	1.5
65	26	50	210	76.1	2.3	26	50	210	70	2
80	26	88.5	266	88.9	2.3	26	88.5	266	85	2

Nominal diameter (port connection)	ASME BPE / DIN 11866 series C				
NPS	ES	CS	LS	Ø DS	WS
½	30	46	135	12.7	1.65
¾	30	52	145	19.05	1.65
1	30	51	152	25.4	1.65
1½	30	60	182	38.1	1.65
2	30	64	210	50.8	1.65
2½	26	56	230	63.5	1.65
3	26	88.5	266	76.2	1.65

DTS 1000290882 EN Version: A Status: RL (released | freigegeben | valide) printed: 13.10.2026

valvesgo.com

5.4. Body with clamp connection

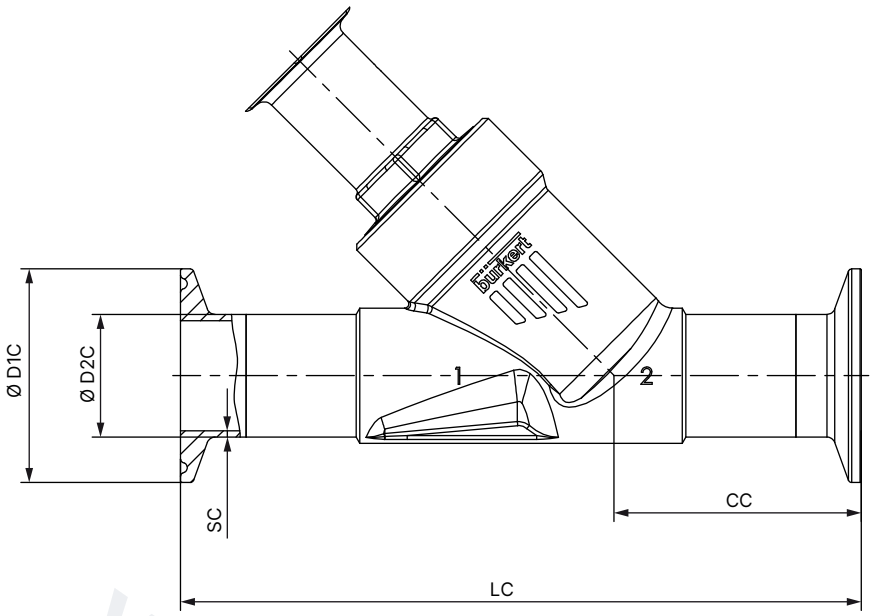

Nominal diameter (port connection)	Clamp: DIN 32676 series B Pipe: DIN EN ISO 1127 / ISO 4200 / DIN 11866 series B					Clamp: DIN 32676 series A Pipe: DIN 11850 - 2 / DIN 11866 series A				
DN	LC	CC	Ø D1 C	Ø D2 C	SC	LC	CC	Ø D1 C	Ø D2 C	SC
15	156	49.0	50.5	21.3	1.6	130	49.5	34.0	19	1.5
20	150	56.5	50.5	26.9	1.6	150	57.0	34.0	23	1.5
25	160	58.0	50.5	33.7	2.0	160	58.5	50.5	29	1.5
32	200	57.5	50.5	42.4	2.0	180	58.0	50.5	35	1.5
40	200	69.0	64.0	48.3	2.0	200	69.5	50.5	41	1.5
50	230	77.5	77.5	60.3	2.6	230	78.0	64.0	53	1.5

Nominal diameter (port connection)	Clamp: ASME BPE Pipe: ASME BPE / DIN 11866 series C				
NPS	LC	CC	Ø D1 C	Ø D2 C	SC
½	130	49.0	25.0	12.7	1.65
¾	150	56.5	25.0	19.05	1.65
1	160	58.0	50.5	25.4	1.65
1½	200	69.0	50.5	38.1	1.65
2	230	77.5	64.0	50.8	1.65

DTS 1000290882 EN Version: A Status: RL (released | freigegeben | valide) printed: 13.10.2026

valvesgo.com

6. Performance specifications

6.1. Fluidic data

Overview of fluidic data for flow below seat (for liquids, steam and gases)

Note:

- K_V value [m³/h]: Measured with water at + 20 °C, 1 bar(g) pressure at valve inlet and free outlet
- Pressure data [bar(g)]: Overpressure to atmospheric pressure

Threaded port G, NPT and RC

Nominal diameter (port connection)		Seat size	Actuator size Ø	K_V value water	Pilot pressure min.	Operating pressure max.		
						CF A		CF B
						Seat seal		
						PTFE	PEEK	PTFE
DN	NPS	DN	[mm]	[m³/h]	[bar(g)]	[bar(g)]	[bar(g)]	[bar(g)]
10	⅜	10	32 (B)	2.4	5.5	16	–	16
8	¼	15	32 (B)	2.6	5.5	11	–	16
			50 (D)	2.6	4.1	16	–	16
			70 (M)	2.6	4.8	25	25	25
10	⅜	15	32 (B)	4.7	5.5	11	–	16
			50 (D)	5.3	4.1	16	–	16
			70 (M)	5.4	4.8	25	25	25
15	½	15	32 (B)	4.7	5.5	11	–	16
			50 (D)	5.3	4.1	16	–	16
			70 (M)	5.4	4.8	25	25	25
20	¾	20	50 (D)	10	4.1	11	8.5	16
			70 (M)	11	4.8	25	25	25
25	1	25	50 (D)	15	4.1	5.2	–	16
			70 (M)	20	4.8	16	13.5	25
			90 (N)	21	5	25	25	25
32	1¼	32	70 (M)	30	4.8	8.5	–	25
			90 (N)	30	5	25	19.5	25
			130 (P)	32	5	–	25	–
40	1½	40	70 (M)	40	4.8	6	–	25
			90 (N)	44	5	16	13.5	25
			130 (P)	47	5	25	25	25
50	2	50	90 (N)	55	5	10	–	25
			130 (P)	62	5	–	–	–
65	2½	65	90 (N)	82	5	5	–	11
			130 (P)	91	5.6	–	12.5	–
80	3	80	130 (P)	140	5.6	10	8	11

1.) According to pressure equipment directive 2014/68/EU for compressible fluids of group 1 (dangerous gases and vapours according to Article 4, paragraph (1), c), i), first indent)

DTS 1000290882 EN Version: A Status: RL (released | freigegeben | valide) printed: 13.10.2026

valvesgo.com

Welded connection DIN 11850 series 2, DIN 11866 series A, DIN EN 10357 series A

Nominal diameter (port connection)		Seat size	Actuator size Ø	K_V value water	Pilot pressure min.	Operating pressure max.		
						CF A		CF B
						Seat seal		
						PTFE	PEEK	PTFE
DN	NPS	DN	[mm]	[m³/h]	[bar(g)]	[bar(g)]	[bar(g)]	[bar(g)]
10	⅜	10	32 (B)	2.4	5.5	16	–	16
10	⅜	15	32 (B)	2.5	5.5	11	–	16
			50 (D)	2.5	4.1	16	–	16
			70 (M)	2.5	4.8	25	25	25
15	½	15	32 (B)	4.7	5.5	11	–	16
			50 (D)	5.3	4.1	16	–	16
			70 (M)	5.4	4.8	25	25	25
20	¾	20	50 (D)	10	4.1	11	8.5	16
			70 (M)	11	4.8	25	25	25
25	1	25	50 (D)	14	4.1	5.2	–	16
			70 (M)	18	4.8	16	13.5	25
			90 (N)	20	5	25	25	25
32	1¼	32	70 (M)	26	4.8	8.5	–	25
			90 (N)	28	5	25	19.5	25
			130 (P)	30	5	–	25	–
40	1½	40	70 (M)	35	4.8	6	–	25
			90 (N)	38	5	16	13.5	25
			130 (P)	41	5	25	25	25
50	2	50	90 (N)	55	5	10	–	25
			130 (P)	60	5	–	–	–
65	2½	65	90 (N)	82	5	5	–	11
			130 (P)	91	5.6	–	12.5	–
80	3	80	130 (P)	140	5.6	10	8	11

1.) According to pressure equipment directive 2014/68/EU for compressible fluids of group 1 (dangerous gases and vapours according to Article 4, paragraph (1), c), i), first indent)

DTS 1000290882 EN Version: A Status: RL (released | freigegeben | valide) printed: 13.10.2026

valvesgo.com

Welded connection ISO 4200, DIN EN ISO 1127, DIN 11866 series B / Flange DIN EN 1092 - 1 (PN 25)

Nominal diameter (port connection)		Seat size	Actuator size Ø	K_V value water	Pilot pressure min.	Operating pressure max.		
						CF A		CF B
						Seat seal		
						PTFE	PEEK	PTFE
OD [mm]	NPS	DN	[mm]	[m³/h]	[bar(g)]	[bar(g)]	[bar(g)]	[bar(g)]
17.2	–	10	32 (B)	2.4	5.5	16	–	16
13.5		15	32 (B)	2.5	5.5	11	–	16
			50 (D)	2.5	4.1	16	–	16
			70 (M)	2.5	4.8	25	25	25
17.2		15	32 (B)	4.7	5.5	11	–	16
			50 (D)	5.3	4.1	16	–	16
			70 (M)	5.4	4.8	25	25	25
21.3		15	32 (B)	4.7	5.5	11	–	16
			50 (D)	5.3	4.1	16	–	16
			70 (M)	5.4	4.8	25	25	25
26.9		20	50 (D)	10	4.1	11	8.5	16
			70 (M)	11	4.8	25	25	25
33.7		25	50 (D)	15	4.1	5.2	–	16
			70 (M)	20	4.8	16	13.5	25
			90 (N)	21	5	25	25	25
42.4		32	70 (M)	30	4.8	8.5	–	25
			90 (N)	30	5	25	19.5	25
			130 (P)	32	5	–	25	–
48.3		40	70 (M)	40	4.8	6	–	25
			90 (N)	44	5	16	13.5	25
			130 (P)	47	5	25	25	25
60.3		50	90 (N)	55	5	10	–	25
			130 (P)	62	5	–	–	–
76.1		65	90 (N)	82	5	5	–	11
			130 (P)	91	5.6	–	12.5	–
88.9		80	130 (P)	140	5.6	10	8	11

1.) According to pressure equipment directive 2014/68/EU for compressible fluids of group 1 (dangerous gases and vapours according to Article 4, paragraph (1), c), i), first indent)

DTS 1000290882 EN Version: A Status: RL (released | freigegeben | valide) printed: 13.10.2026

valvesgo.com

Welded connection ASME BPE, DIN 11866 series C / Clamp ASME BPE

Nominal diameter (port connection)		Seat size	Actuator size Ø	K_V value water	Pilot pressure min.	Operating pressure max.		
						CF A		CF B
						Seat seal		
						PTFE	PEEK	PTFE
DN	NPS	DN	[mm]	[m³/h]	[bar(g)]	[bar(g)]	[bar(g)]	[bar(g)]
15	½	10	32 (B)	1.6	5.5	16	–	16
15	½	15	32 (B)	1.6	5.5	11	–	16
			50 (D)	1.6	4.1	16	–	16
			70 (M)	1.6	4.8	25	25	25
20	¾	20	50 (D)	8.4	4.1	11	8.5	16
			70 (M)	9.4	4.8	25	25	25
25	1	25	50 (D)	13	4.1	5.2	–	16
			70 (M)	16	4.8	16	13.5	25
			90 (N)	16	5	25	25	25
40	1½	40	70 (M)	35	4.8	6	–	25
			90 (N)	38	5	16	13.5	25
			130 (P)	41	5	25	25	25
50	2	50	90 (N)	55	5	10	–	25
			130 (P)	58	5	–	–	–
65	2½	65	90 (N)	82	5	5	–	11
			130 (P)	85	5.6	–	12.5	–
80	3	65	90 (N)	82	5	5	–	11
			130 (P)	91	5.6	–	12.5	–
80	3	80	130 (P)	140	5.6	10	8	11

1.) According to pressure equipment directive 2014/68/EU for compressible fluids of group 1 (dangerous gases and vapours according to Article 4, paragraph (1), c), i), first indent)

DTS 1000290882 EN Version: A Status: RL (released | freigegeben | valide) printed: 13.10.2026

valvesgo.com

valvesgo.com

Pilot pressure diagrams with flow direction below seat (control function B, seat seal PTFE)

Actuator size Ø 32 mm (B)
Maximum control pressure 7 bar(g)

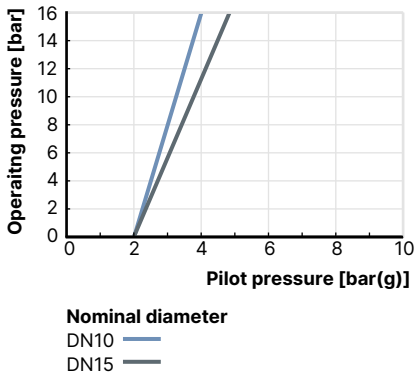

Actuator size Ø 50 mm (D)
Maximum control pressure 10.5 bar(g)

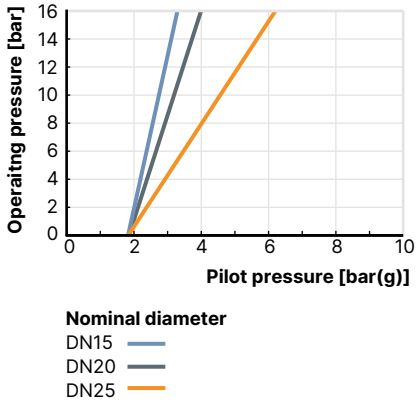

Actuator size Ø 70 mm (M)
Maximum control pressure 10.5 bar(g)

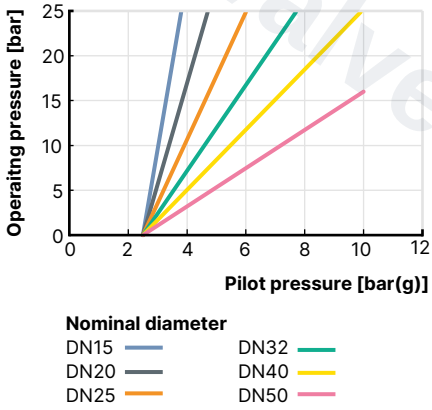

Actuator size Ø 90 mm (N)
Maximum control pressure 10.5 bar(g)

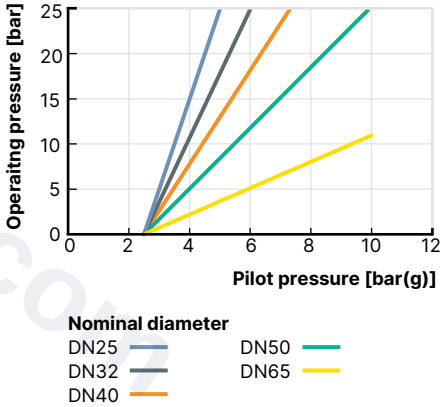

Actuator size Ø 130 mm (P)
Maximum control pressure 7.5 bar(g)

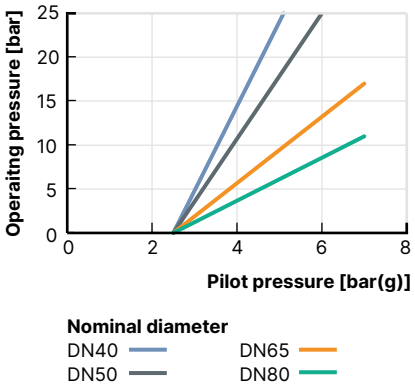

DTS 1000290882 EN Version: A Status: RL (released | freigegeben | valide) printed: 13.10.2026

valvesgo.com

Overview of fluidic data with flow above seat (for gases and steam)

Note:

- K_V value [m³/h]: Measured with water at + 20 °C, 1 bar(g) pressure at valve inlet and free outlet
- K_V value water: see **"Overview of fluidic data for flow below seat (for liquids, steam and gases)" on page 13**
- Pressure data [bar(g)]: Overpressure to atmospheric pressure

⚠ WARNING

Risk of damage due to bursting pipes and bursting equipment when the flow is above the seat.
In the case of liquid mediums, water hammer can occur, causing pipes and the device to burst.

Do not use valves with flow above the seat for liquid mediums.

Nominal diameter (port connection)		Actuator size Ø	Operating pressure max. + 185 °C
			CF A
			PTFE
DN	NPS	[mm]	[bar(g)]
15	½	50 (D)	16
		70 (M)	16
20	¾	50 (D)	16
		70 (M)	16
25	1	50 (D)	16
		70 (M)	16
32	1¼	70 (M)	16
40	1½	70 (M)	16
		90 (N)	16
50	2	70 (M)	12
		90 (N)	16
65	2½	90 (N)	8

DTS 1000290882 EN Version: A Status: RL (released | freigegeben | valide) printed: 13.10.2026

valvesgo.com

valvesgo.com

Pilot pressure diagram with flow direction above seat (control function A)

Actuator size Ø 50 mm (D)
Maximum control pressure 10.5 bar(g)

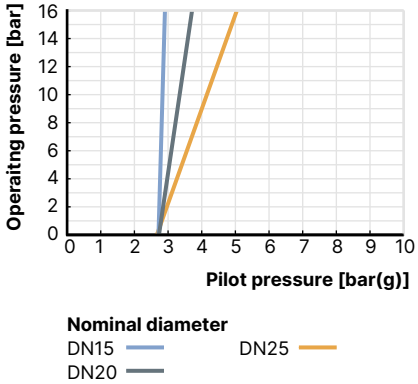

Actuator size Ø 70 mm (M)
Maximum control pressure 10.5 bar(g)

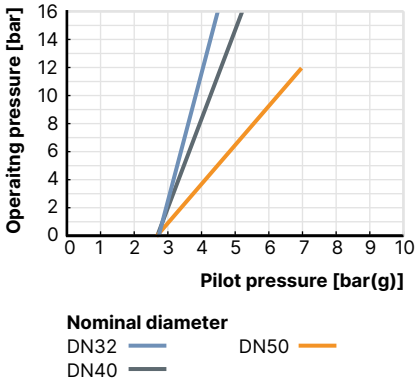

Actuator size Ø 90 mm (N)
Maximum control pressure 10.5 bar(g)

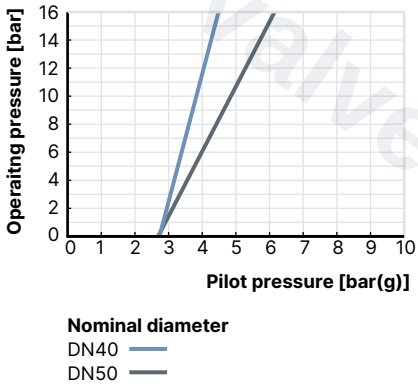

valvesgo.com

DTS 1000290882 EN Version: A Status: RL (released | freigegeben | valide) printed: 13.10.2026

valvesgo.com

6.2. Operating limits

Operating limits for medium temperature and operating pressure

In addition to the maximum operating pressures, the operating range of Bürkert process valves is limited by the nominal pressure according to the relevant standard.

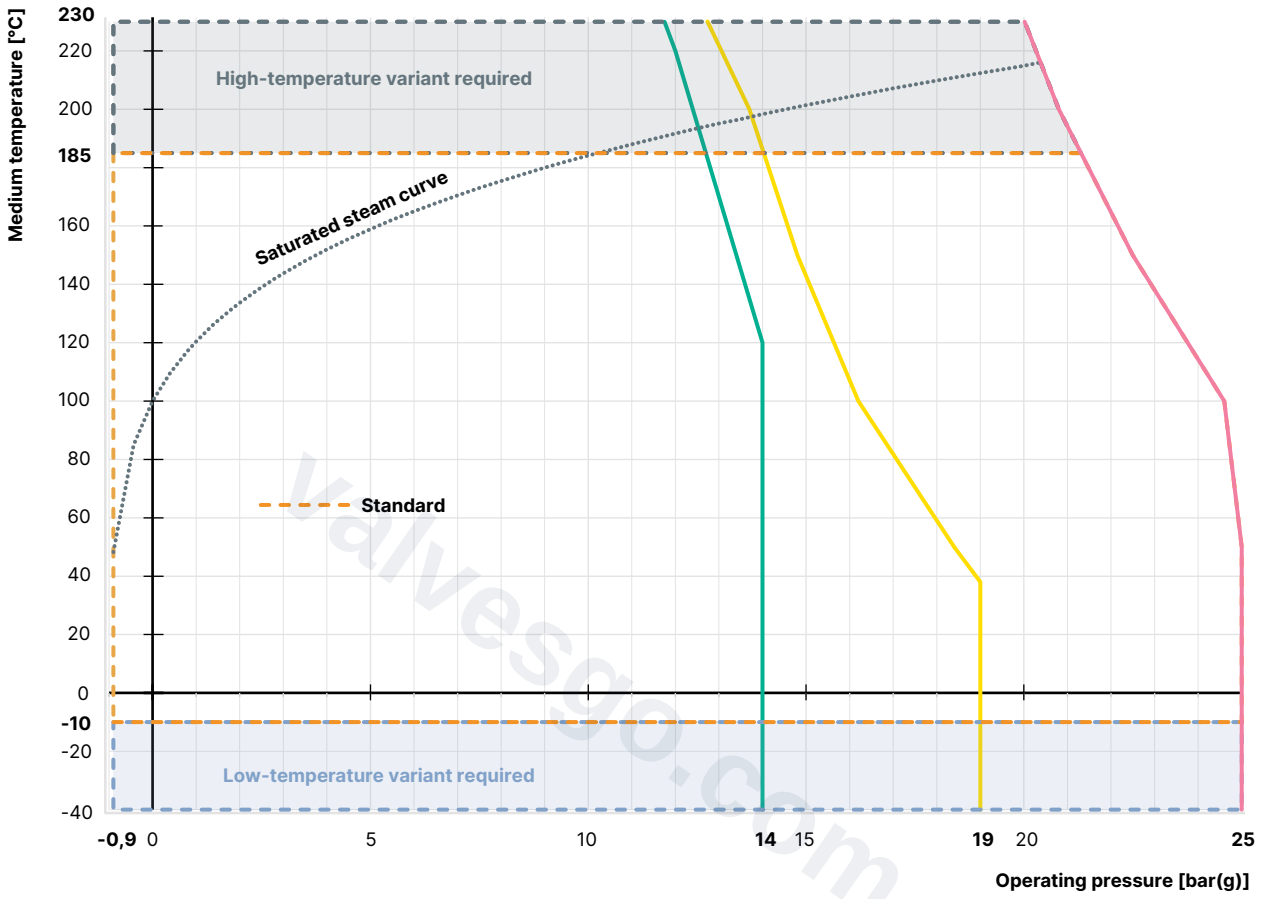

- Operating limits for PN25 according to DIN EN 12516-1
- Operating limits for flange 10K according to JIS B 2220
- Operating limits for Class 150 according to ASME B16.34
- Saturated steam curve for water

DTS 1000290882 EN Version: A Status: RL (released | freigegeben | valide) printed: 13.10.2026

valvesgo.com

Operating limits for ambient and medium temperature

Stainless steel actuator

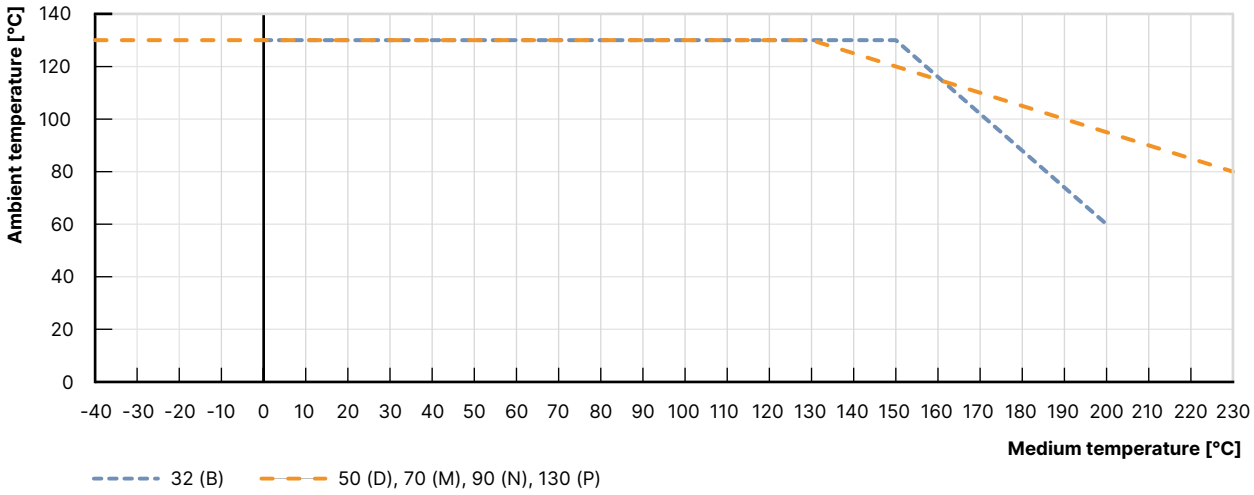

Operating limits for optional variants

High-temperature variant
Thanks to an adaption of the packing gland and seat seal in PEEK, this variant is suitable for applications with steam, neutral gases and other heat transfer mediums up to + 230 °C.

Water variant
For applications with water up to + 200 °C, a special configuration of the packing gland increases service life significantly. It is recommended for water temperatures starting at + 85 °C.

Vacuum variant
Without leakage bore, this design is suitable for pressures down to - 0.9 bar(g).

Low-temperature variant
Suitable for minimum medium temperatures down to - 40 °C

DTS 1000290882 EN Version: A Status: RL (released | freigegeben | valide) printed: 13.10.2026

valvesgo.com

valvesgo.com

7. Product accessories

Electric position feedback indicator	
Type 8697 ▸ Actuator size Ø 40 (C)...125 (H)	
	The position feedback Type 8697 is designed for integrated mounting on CLASSIC series 20XX process valves, suiting the requirements of hygienic process environments. Mechanical or inductive limit switches register the position of the valve. **Features** • Compact design • LED position indicator • Mechanical or inductive limit switches for end position registering • Easy-to-clean clean chemically resistant housing featuring IP65/IP67, 4X Rating • Optionally intrinsically safe variant according to IECEx **Customer benefits** • Easy and quick installation • High level of signal reliability thanks to self-adjusting limit switches • Minimised space requirement in the plant piping for more flexibility in plant design
Adaptation for proximity switch	
Type 2XXX ▸	
	Various options for the use of inductive proximity switches are available for the CLASSIC series actuators: • Nipple • Support bracket, 1-fold • Support bracket, 2-fold
Stroke limiter	
Type 2XXX ▸	
 	Stroke limitations can be used to limit the minimum and maximum flow rate of the valves. Different variants are available: • Maximum stroke limitation • Maximum and minimum stroke limitation with optical position indicator

DTS 1000290882 EN Version: A Status: RL (released | freigegeben | valide) printed: 13.10.2026

valvesgo.com

valvesgo.com

8. Networking and combination with other Bürkert products

The **angled seat valve Type 2060** can be combined with the **feedback positioner Type 8697** to form the **valve system on/off Type 8801-YV**.

Note:

- For the configuration of further valve systems use the **Product Enquiry Form** (see **"9.3. Bürkert Product Enquiry Form" on page 24**).
- You order two components and receive a completely assembled and tested valve.

Angle seat valve

Type 2060 welded connection

▼

Position feedback

Type 8697 ▸
Electric feedback positioner for process valves

▼

Valve system on/off CLASSIC

Type 8801-YV ▸
on/off valve system with decentralised automation

valvesgo.com

DTS 1000290882 EN Version: A Status: RL (released | freigegeben | valide) printed: 13.10.2026

valvesgo.com

9. Ordering information

9.1. Bürkert eShop

Bürkert eShop – Easy ordering and quick delivery

You want to find your desired Bürkert product or spare part quickly and order directly? Our online shop is available for you 24/7. Sign up and enjoy all the benefits.

Order online now

9.2. Bürkert product filter

Bürkert product filter – Get quickly to the right product

You want to select products comfortably based on your technical requirements?
Use the Bürkert product filter and find suitable articles for your application quickly and easily.

Try out our product filter

9.3. Bürkert Product Enquiry Form

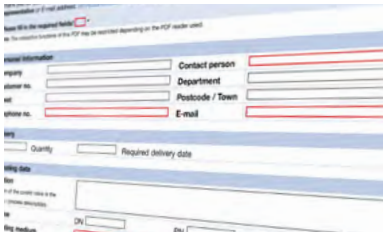

Bürkert Product Enquiry Form – Your enquiry quickly and compactly

Would you like to make a specific product enquiry based on your technical requirements? Use our Product Enquiry Form for this purpose. There you will find all the relevant information for your Bürkert contact. This will enable us to provide you with the best possible advice.

Fill out the form now

DTS 1000290882 EN Version: A Status: RL (released | freigegeben | valide) printed: 13.10.2026

valvesgo.com

9.4. Ordering chart welded connection

Valve with flow direction below seat

Control function	Nominal diameter (port connection)		Port connection pipe Ø x wall thickness	Actuator size Ø	Pilot pressure min.	Operating pressure max. + 185 °C	Article no.
	DN	NPS	[mm]	[mm]	[bar(g)]	[bar(g)]	
DIN EN ISO 1127 / ISO 4200 / DIN 11866 series B							
A (CF A) see control functions [1.)]	10	⅜	17.2 × 1.6	32 (B)	5.5...10	16	387585
	15	½	21.3 × 1.6	32 (B)	5.5...10	11	387629
				50 (D)	4.1...10.5	16	285215
	20	¾	26.9 × 1.6	50 (D)	4.1...10.5	11	285217
				70 (M)	4.8...10.5	25	285218
	25	1	33.7 × 2.0	50 (D)	4.1...10.5	5.2	285219
				70 (M)	4.8...10.5	16	285220
	32	1¼	42.4 × 2.0	70 (M)	4.8...10.5	8.5	285221
				90 (N)	5.0...10.5	25	285222
	40	1½	48.3 × 2.0	70 (M)	4.8...10.5	6	285223
				90 (N)	5.0...10.5	16	285224
	50	2	60.3 × 2.0	90 (N)	5.0...10.5	10	285515
				130 (P)	5.0...7.5	25	285705
	65	2½	76.1 × 2.3	90 (N)	5.0...10.5	5	285227
				130 (P)	5.6...7.5	12	285228
B (CF B) see control functions [1.)]	10	⅜	17.2 × 1.6	32 (B)	5.5...10	16	387647
	15	½	21.3 × 1.6	32 (B)	5.5...10	16	387651
				50 (D)	See diagram for valves with Flow direction below seat [2.)]	16	285500
				70 (M)		25	287565
	20	¾	26.9 × 1.6	50 (D)		16	285501
				70 (M)		25	287566
	25	1	33.7 × 2.0	70 (M)		25	285503
	32	1¼	42.4 × 2.0	70 (M)		25	285504
	40	1½	48.3 × 2.0	70 (M)		25	285505
	50	2	60.3 × 2.0	70 (M)		16	287567
	65	2½	76.1 × 2.3	90 (N)		11	285511
DIN 11850 - 2 / DIN 11866 series A / DIN EN 10357 series A							
A (CF A) see control functions [1.)]	10	⅜	13.0 x 1.5	32 (B)	5.5...10	16	387605
	15	½	19.0 × 1.5	32 (B)	5.5...10	11	387596
				50 (D)	4.1...10.5	16	285201
	20	¾	23.0 × 1.5	50 (D)	4.1...10.5	11	285203
				70 (M)	4.8...10.5	25	285204
	25	1	29.0 × 1.5	50 (D)	4.1...10.5	5.2	285205
				70 (M)	4.8...10.5	16	285206
	32	1¼	35.0 × 1.5	70 (M)	4.8...10.5	8.5	285207
				90 (N)	5.0...10.5	25	285208
	40	1½	41.0 × 1.5	70 (M)	4.8...10.5	6	285209
				90 (N)	5.0...10.5	16	285210
	50	2	53.0 × 1.5	90 (N)	5.0...10.5	10	285211
				130 (P)	5.0...7.5	25	285212
	65	2½	70.0 × 2.0	90 (N)	5.0...10.5	5	285213
				130 (P)	5.6...7.5	12	285214

DTS 1000290882 EN Version: A Status: RL (released | freigegeben | valide) printed: 13.10.2026

valvesgo.com

Control function	Nominal diameter (port connection)		Port connection pipe Ø x wall thickness	Actuator size Ø	Pilot pressure min.	Operating pressure max. + 185 °C	Article no.
	DN	NPS	[mm]	[mm]	[bar(g)]	[bar(g)]	
B (CF B) see control functions [1.)]	10	⅜	13.0 x 1.5	32 (B)	5.5...10	16	387633
	15	½	19.0 × 1.5	32 (B)	5.5...10	16	387623
				50 (D)	See diagram for valves with Flow direction below seat [2.)]	16	287555
				70 (M)		25	287556
	20	¾	23.0 × 1.5	50 (D)		16	287557
				70 (M)		25	287558
	25	1	29.0 × 1.5	70 (M)		25	287559
	32	1¼	35.0 × 1.5	70 (M)		25	287560
	40	1½	41.0 × 1.5	70 (M)		25	287561
	50	2	53.0 × 1.5	90 (N)		16	287562
	65	2½	70.0 × 2.0	90 (N)		11	287563

DTS 1000290882 EN Version: A Status: RL (released | freigegeben | valide) printed: 13.10.2026

valvesgo.com

valvesgo.com

Control function	Nominal diameter (port connection)		Port connection pipe Ø x wall thickness	Actuator size Ø	Pilot pressure min.	Operating pressure max. + 185 °C	Article no.
	DN	NPS	[mm]	[mm]	[bar(g)]	[bar(g)]	
ASME BPE / DIN 11866 series C							
A (CF A) see control functions [1.)]	10	⅜	12.7 × 1.65	32 (B)	5.5...10	16	387603
	15	½	12.7 × 1.65	32 (B)	5.5...10	11	387637
				50 (D)	4.1...10.5	16	285189
	20	¾	19.05 × 1.65	50 (D)	4.1...10.5	11	285191
				70 (M)	4.8...10.5	25	285192
	25	1	25.4 × 1.65	50 (D)	4.1...10.5	5.2	285193
				70 (M)	4.8...10.5	16	285194
	40	1½	38.1 × 1.65	70 (M)	4.8...10.5	6	285195
				90 (N)	5.0...10.5	25	285196
	50	2	50.8 × 1.65	90 (N)	5.0...10.5	10	285197
				130 (P)	5.0...7.5	25	285198
	65	2½	63.5 × 1.65	90 (N)	5.0...10.5	5	285199
				130 (P)	5.6...7.5	12	285200
B (CF B) see control functions [1.)]	10	⅜	12.7 × 1.65	32 (B)	5.5...10	16	387650
	15	½	12.7 × 1.65	32 (B)	5.5...10	16	o. r.
				50 (D)	See diagram for valves with Flow direction below seat [2.)]	16	285499
				70 (M)		25	287548
	20	¾	19.05 × 1.65	50 (D)		16	287549
				70 (M)		25	287550
	25	1	25.4 × 1.65	70 (M)		25	287551
	40	1½	38.1 × 1.65	70 (M)		25	287552
	50	2	50.8 × 1.65	70 (M)		16	285509
	65	2½	63.5 × 1.65	90 (N)		11	287553

o. r. = on request

1.) Further information can be found in chapter "2. Control functions" on page 4.

2.) See diagram in chapter "Pilot pressure diagrams with flow direction below seat (control function B, seat seal PTFE)" on page 17

Further variants on request

Approval
Drinking water, explosion protection

Pressure
Other variants for operating pressures up to 25 bar(g)
Vacuum variant down to - 0.9 bar(g)

Temperature
High temperature variant up to + 230 °C
Hot water variant up to + 200 °C
Low temperature variant down to - 40 °C

Process connection
Threaded/Clamp

DTS 1000290882 EN Version: A Status: RL (released | freigegeben | valide) printed: 13.10.2026

valvesgo.com

Valves with flow direction above seat

Control function	Nominal diameter (port connection)		Port connection pipe Ø x wall thickness	Actuator size Ø	Pilot pressure min.	Operating pressure max. + 185 °C	Article no.
	DN	NPS	[mm]	[mm]	[bar(g)]	[bar(g)]	
DIN EN ISO 1127 / ISO 4200 / DIN 11866 series B							
A (CF A) see control functions [1.)]	15	½	21.3 × 1.6	50 (D)	See diagram for valves with Flow direction above seat [2.)]	16	287541
	20	¾	26.9 × 1.6	50 (D)		16	287542
	25	1	33.7 × 2.0	50 (D)		16	287543
	32	1¼	42.4 × 2.0	70 (M)		16	287544
	40	1½	48.3 × 2.0	70 (M)		16	287545
	50	2	60.3 × 2.0	70 (M)		16	287546
				90 (N)		16	287547
DIN 11850 - 2 / DIN 11866 series A / DIN EN 10357 series A							
A (CF A) see control functions [1.)]	15	½	19.0 × 1.5	50 (D)	See diagram for valves with Flow direction above seat [2.)]	16	287534
	20	¾	23.0 × 1.5	50 (D)		16	287535
	25	1	29.0 × 1.5	50 (D)		16	287536
	32	1¼	35.0 × 1.5	70 (M)		16	287537
	40	1½	41.0 × 1.5	70 (M)		16	287538
	50	2	53.0 × 1.5	70 (M)		12	287539
				90 (N)		16	287540
ASME BPE / DIN 11866 series C							
A (CF A) see control functions [1.)]	15	½	12.7 × 1.65	50 (D)	See diagram for valves with Flow direction above seat [2.)]	16	287528
	20	¾	19.05 × 1.65	50 (D)		16	287529
	25	1	25.4 × 1.65	50 (D)		16	287530
	40	1½	38.1 × 1.65	70 (M)		16	287531
	50	2	50.8 × 1.65	70 (M)		12	287532
				90 (N)		16	287533

1.) Further information can be found in chapter "2. Control functions" on page 4.
2.) See diagram in chapter "Pilot pressure diagrams with flow direction below seat (control function B, seat seal PTFE)" on page 17

9.5. Ordering chart accessories

Note:

- For further accessories see separate **data sheet Accessories Type 2XXX ▶**.
- Accessories must be ordered separately

Accessories	For actuator size	Article no.
Stainless steel silencer kit (stainless steel silencer including PTFE seal)	Universal	696931
Maximum stroke limit	Ø 50 (D), Ø 70 (M)	699550
Maximum stroke limit	Ø 90 (N), Ø 130 (P)	699994
Minimum/maximum stroke limit	Ø 50 (D), Ø 70 (M)	699986
Minimum/maximum stroke limit	Ø 90 (N), Ø 130 (P)	699998
Proximity switch 1-fold	Ø 50 (D), Ø 70 (M)	699989
Proximity switch 1-fold	Ø 90 (N), Ø 130 (P)	699991
Proximity switch 2-fold	Ø 50 (D), Ø 70 (M)	699990
Proximity switch 2-fold	Ø 90 (N), Ø 130 (P)	699992
Adapter kit for Type 8697	Ø 50 (D), Ø 70 (M)	699551
Adapter kit for Type 8697	Ø 90 (N), Ø 130 (P)	580000
Type 8697	Universal	o. r.
Angled screw-in connector 45°, M5...Ø 4 mm	Ø 32 (B)	903383
Angled screw-in connector 45°, M5...Ø 6 mm	Ø 32 (B)	771077

o. r. = on request

DTS 1000290882 EN Version: A Status: RL (released | freigegeben | valide) printed: 13.10.2026

valvesgo.com