bürkert
FLUID CONTROL SYSTEMS

# Type 2101

2/2 way globe valve
2/2-Wege-Geradsitzventil
Vanne à siège droit 2/2 voies

# Operating Instructions

## Bedienungsanleitung
## Manuel d‘utilisation

MAN 1000295308 EN Version: JStatus: RL (released | freigegeben) printed: 22.08.2026

valvesgo.com

valvesgo.com

We reserve the right to make technical changes without notice.
Technische Änderungen vorbehalten.
Sous réserve de modifications techniques.

© Bürkert Werke GmbH & Co. KG, 2008 - 2025

Operating Instructions 2502/16_EU-ML_00806076 / Original DE



valvesgo.com

1 OPERATING INSTRUCTIONS ..... 4
1.1 Symbols ..... 4
1.2 Definition of terms/abbreviations ..... 4
2 INTENDED USE ..... 5
3 BASIC SAFETY INSTRUCTIONS ..... 5
4 GENERAL NOTES ..... 7
4.1 Contact addresses ..... 7
4.2 Warranty ..... 7
4.3 Information on the Internet ..... 7
5 PRODUCT DESCRIPTION ..... 7
5.1 General description ..... 7
5.2 Properties ..... 7
5.3 Intended area of application ..... 8
6 STRUCTURE AND FUNCTION ..... 8
6.1 Structure ..... 8
6.2 Function ..... 9
7 TECHNICAL DATA ..... 11
7.1 Standards and directives ..... 11
7.2 Type label ..... 11
7.3 Conversion of actuator size ..... 12
7.4 Operating conditions ..... 12
7.5 General technical data ..... 17
8 INSTALLATION ..... 18
8.1 Notes on installation ..... 18
8.2 Before installation ..... 18
8.3 Installation ..... 20
8.4 Attaching a sensor or fitting to the relief bore ..... 22
8.5 Connect device pneumatically ..... 23
8.6 Start-up ..... 24
8.7 Disassembly ..... 25
9 ELECTRICAL CONTROL UNIT ..... 25
10 MAINTENANCE, CLEANING ..... 25
10.1 Maintenance work ..... 26
10.2 Replacing wearing parts ..... 27
11 FAULTS ..... 37
12 SPARE PARTS ..... 38
12.1 Replacement part set ..... 38
12.2 Installation tools ..... 40
13 TRANSPORT, STORAGE, PACKAGING ..... 41

valvesgo.com

# 1 OPERATING INSTRUCTIONS

The operating instructions describe the entire life cycle of the device. Keep these instructions ready to hand at the operating site.

**Important safety information.**

- Read these instructions carefully.
- Above all, observe the safety instructions, intended use and operating conditions.
- Persons who work on the device must read and understand these instructions.

## 1.1 Symbols

**DANGER**

**Warning of an immediate danger.**

- Failure to comply will result in death or serious injury.

**WARNING**

**Warns of a potential danger.**

- Failure to observe these warnings may result in serious injuries or death.

**CAUTION**

**Warns of a potential hazard.**

- Failure to comply with these instructions may result in moderate or minor injury.

**ATTENTION**

**Warns of damage.**

Important tips and recommendations.

Refers to information in these operating instructions or in other documentation.

- Highlights instructions to avoid a danger.

→ Designates a procedure which you must carry out.

## 1.2 Definition of terms/abbreviations

| Term | Definition for these instructions |
|---|---|
| Device | 2/2-was globe valve Type 2101 |
| bar | In these instructions, the unit bar stands for relative pressure. The absolute pressure is stated separately in bar(abs). |

valvesgo.com

# 2 INTENDED USE

**Unauthorised use of the Type 2101 globe valve may be dangerous to people, nearby equipment and the environment.**

- The device is designed to control the flow of liquid and gaseous media.
- The globe valve is suitable for steam sterilization.
- In the potentially explosive atmosphere, only use devices that are approved for this purpose. These devices are identified by a separate Ex type label. Before use, note the information on the separate Ex type label and the Ex additional instructions or the separate Ex operating Instructions.
- To use the device, observe the permitted data, operating conditions and application conditions. These specifications can be found in the contract documents, the operating instructions and on the type label.
- Protect device from harmful environmental influences (e.g. radiation, air humidity, fumes). For any matters requiring clarification, contact the relevant sales department.
- Use the device only in conjunction with third-party devices and components recommended or approved by Bürkert.
- Prerequisites for safe and trouble-free operation are correct transport, correct storage and installation as well as careful operation and maintenance.
- The exhaust air can be contaminated by lubricants in the actuator.
- Only use the device as intended.

# 3 BASIC SAFETY INSTRUCTIONS

These safety instructions do not take into account any unforeseen circumstances or events that occur during installation, operation and maintenance. The operator is responsible for observing the location-specific safety regulations, also with reference to personnel.

**DANGER**

**Risk of injury due to high pressure in the system or device.**

- Before working on the system or device, switch off the pressure and ventilate or empty the lines.

**Risk of injury due to electric shock (with installed electrical components).**

- Before working on the device or system, switch off the power supply. Secure against reactivation.
- Observe the applicable accident prevention and safety regulations for electrical devices.

**WARNING**

**Risk of injury when opening the actuator.**

The actuator contains a spring under tension. When the actuator is opened, the spring will jump out and may cause injuries.

- Do not open the actuator.

**Risk of injury due to moving parts in the device.**

- Do not reach into openings in the device.

**WARNING**

**Danger due to loud noises.**

- Depending on the usage conditions, the device may generate loud noises. Detailed information on the probability of loud noises is available from the respective sales department.
- Wear hearing protection when in the vicinity of the device.

**CAUTION**

**Risk of burns or fire from hot device surfaces due to prolonged operation.**

- Only touch the device when wearing protective gloves.
- Keep the device away from highly flammable substances and media.

**Discharge of medium if packing gland worn.**

- Relief bore must be regularly inspected for any medium leakages.
- If medium is leaking from the relief bore, the packing gland must be replaced.
- If the medium is hazardous, secure the area around the leakage to prevent risks.

**Risk of injury due to bursting lines and device.**

- Because of the risk of pressure surge, valves with the flow direction above the seat must not be used for fluid media.
- Observe the type of flow and type of medium for operating the device.

**General hazardous situations.**

To prevent injuries, observe the following:

- Secure device or system to prevent unintentional activation.
- Only trained technicians may perform installation and maintenance work.
- Perform installation work and maintenance work using suitable tools only.
- Following interruption of the process, ensure that the process is restarted in a controlled manner. Observe the sequence:
  1. Apply electrical or pneumatic supply.
  2. Charge with medium.
- Use the device only when it is in perfect condition and in accordance with the operating instructions.
- For applications planning and operation of the device, observe the plant-specific safety regulations.
- The plant owner is responsible for the safe operation and handling of the plant.
- Observe the general rules of technology.
- Install the appliance in accordance with the regulations applicable in your country.

Please observe the order to protect against damage to the device:

- Feed only those media listed in chapter “7 Technical data” into the medium ports.
- Do not make any changes to the device and do not subject it to mechanical stress.
- Transport, install and dismantle heavy device only with the aid of a second person and using suitable tools.

valvesgo.com


valvesgo.com

# 4 GENERAL NOTES

## 4.1 Contact addresses

**Germany**

Bürkert Fluid Control Systems
Sales Center
Christian-Bürkert-Str. 13–17
D-74653 Ingelfingen
Tel. +49 (0) 7940 - 10 91 111
Fax +49 (0) 7940 - 10 91 448
E-mail: info@burkert.com

**International**

The contact addresses can be found on the back pages of the printed operating instructions.

They are also available online at: country.burkert.com

## 4.2 Warranty

A precondition for the warranty is that the device is used as intended in consideration of the specified operating conditions.

## 4.3 Information on the Internet

Operating instructions and data sheets for Type 2101 can be found online at: country.burkert.com

# 5 PRODUCT DESCRIPTION

## 5.1 General description

The 2/2-way globe valve Type 2101 is suitable for liquid and gaseous media. Using neutral gases or air (control media), it controls the flow of water, alcohol, oil, fuel, hydraulic fluid, saline solution, lye, organic solvents and vapour (flow media).

One special characteristic of the globe valves is the screwed-in seats, which can be used to reduce the seat size.

**Definition DN**
DN refers to the nominal diameter of the seat, not that of the port connection.

## 5.2 Properties

- High seal tightness due to self-adjusting packing glands (spindle seal element)
- High seat tightness due to swivel plate
- Actuator can be seamlessly rotated by 360°
- Maintenance-free under normal conditions

### 5.2.1 Options

- Control unit: depending on the requirements, various control unit variants are available.
- Stroke limit: limit of maximum opening / flow rate due to adjusting screw.
- Position feedback sensor: the device is available with mechanical limit switches or inductive proximity switches.

valvesgo.com

### 5.2.2 Device variants

The globe valve is available for the following actuator sizes:
ø 50 mm, ø 70 mm, ø 90 mm, ø 130 mm and ø 225 mm.

### 5.2.3 Restrictions

**WARNING**

**Risk of injury from pressure surge.**

A pressure surge could cause lines and the device to burst.

Because of the risk of pressure surge, **valves with the flow direction above the seat must not be used for fluid media.**

- Observe the type of flow and type of medium for operating the device.

## 5.3 Intended area of application

Observe the maximum pressure range on the type label!

- For neutral gases and liquids up to 40 bar.
- Steam up to 230 °C.
- Hot water up to 200 °C.
- Aggressive media.

# 6 STRUCTURE AND FUNCTION

## 6.1 Structure

The globe valve consists of a pneumatically actuated piston actuator and a 2-way body.

The actuator is made from polyphenylene sulphide (PPS) or stainless steel (for actuator size 225).

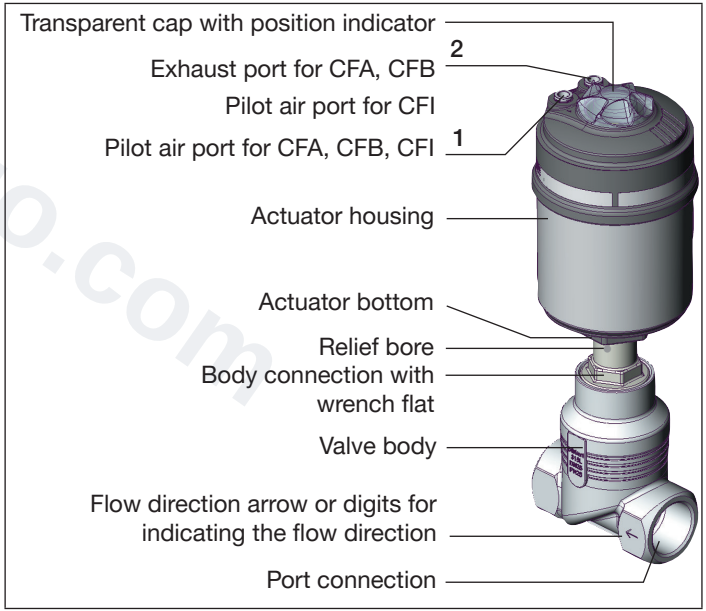


*Fig. 1: Structure and description, globe valve type 2101*


valvesgo.com

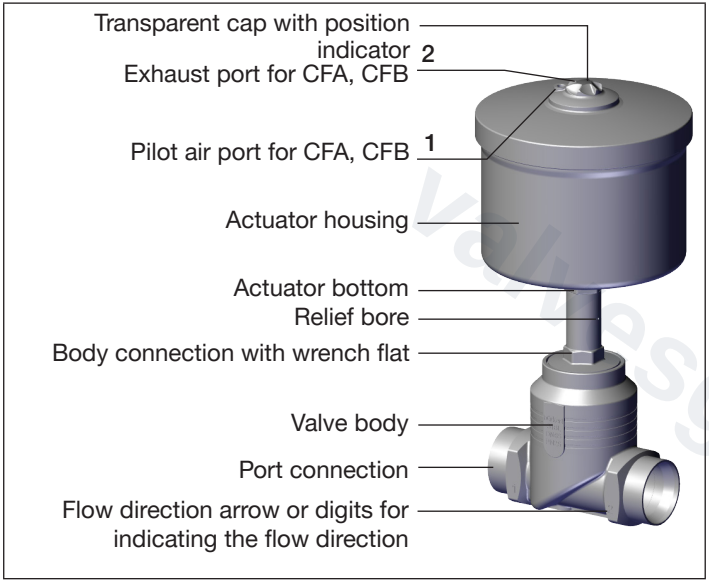


*Fig. 2: Structure and description, globe valve type 2101, actuator size 225*

## 6.2 Function

Depending on the variant, the valve seat is closed in the direction of or against the medium flow.

Spring force (CFA) or pneumatic pilot pressure (CFB and CFI) generate the closing force on the swivel plate. A spindle connected to the actuator piston transmits the force.

### 6.2.1 Control functions (CF)

**WARNING**

**For control function I – risk of pilot pressure failure.**

With control function I, the control unit and reset are pneumatic. No defined position is reached during a pressure failure.

- To ensure a controlled restart of the device, first apply pilot pressure and then activate the medium.

| | |
|---|---|
| **Control function A (CFA)**<br>Closed by spring force in rest position | 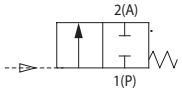 |
| **Control function B (CFB)**<br>Opened by spring force in rest position | 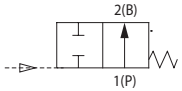 |
| **Control function I (CFI)**<br>Actuating function via reciprocal pressurisation. | 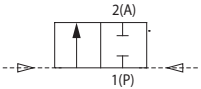 |

### 6.2.2 Flow direction below seat

Depending on the variant, the valve is closed against the medium flow either with spring force (control function A, CFA) or pilot pressure (control function B or I, CFB or CFI).
As the medium is present under the swivel plate, the operating pressure contributes to the opening of the valve.

**WARNING**

**Valve leak if there is too little minimum pilot pressure or high operating pressure!**

Minimum pilot pressure for CFB and CFI that is too low, or failing to meet the permitted operating pressure, can cause a leak in the valve seat.

- Adhere to minimum pilot pressure.
- Do not exceed the operating pressure.

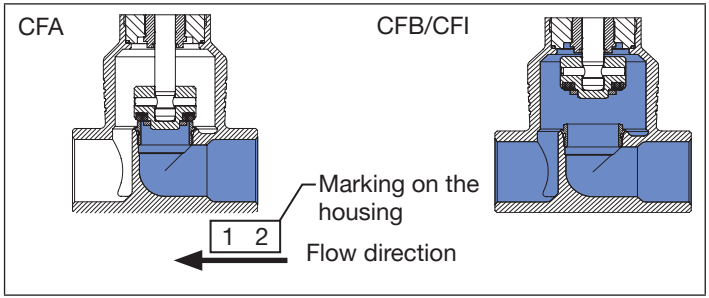


*Fig. 3: Flow direction below seat (idle on/off, closing against medium)*

### 6.2.3 Flow direction above the seat

The valve is closed with the medium flow via spring force (control function A, CFA). Because the operating pressure is above the swivel plate, it helps the valve close and also contributes to sealing the valve seat. The valve opens via pilot pressure.

**WARNING**

**Risk of injury from pressure surge.**

A pressure surge could cause lines and the device to burst. Because of the risk of pressure surge, **valves with the flow direction above the seat must not be used for fluid media.**

- Observe the type of flow and type of medium for operating the device.

In order to ensure complete opening, the minimum pilot pressure must be used.

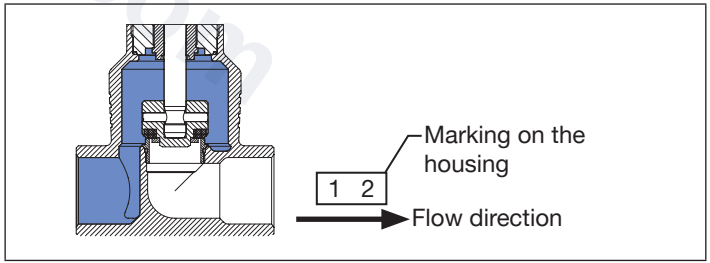


*Fig. 4: Flow direction above the seat (idle off, closing with the medium)*


valvesgo.com

# 7 TECHNICAL DATA

## 7.1 Standards and directives

The device complies with the valid EU harmonisation legislation. In addition, the device also complies with the requirements of the laws of the United Kingdom.

The harmonised standards that have been applied for the conformity assessment procedure are listed in the current version of the EU Declaration of Conformity/ UK Declaration of Conformity.

According to Pressure Equipment Directive observe the following operating conditions:

| DN (port connection) | Maximum pressure for compressible fluids of Group 1 (dangerous gases and vapours according to Art. 3, No. 1.3, letter a, first dash) |
|---|---|
| DN65 | 15 bar |
| DN80 | 12.5 bar |
| DN100 | 10 bar |

## 7.2 Type label

Example:

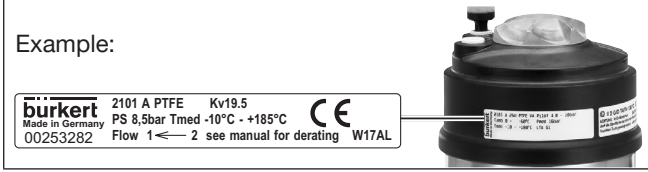


*Fig. 5: Type label example*

**WARNING**

**Risk of injury from high pressure.**

Important, device-specific technical data are listed on the type label.

- Note the permitted pressure range on the device type label.

Example:

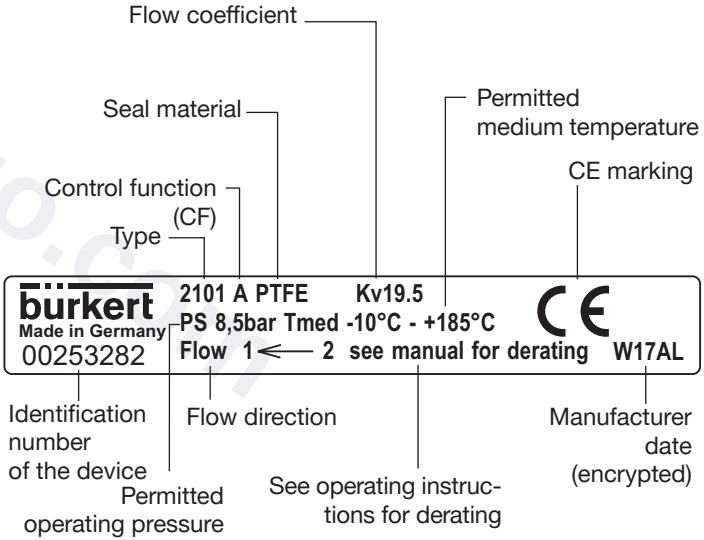

## 7.3 Conversion of actuator size

| Actuator size [mm] | Designation | Outer diameter A [mm] | Scale drawing |
|---|---|---|---|
| 50 | D | 64.5 | 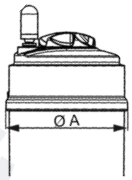  |
| 70 | M | 91 | |
| 90 | N | 120 | |
| 130 | P | 159 | |
| 225 | L | 245 | |

*Tab. 1: Conversion of actuator size*

## 7.4 Operating conditions

### 7.4.1 Temperature ranges

| Actuator size [mm] | Actuator material | Medium temperature [°C] for PTFE-seat seal | Medium temperature [°C] for high temperature variant with PEEK seat seal | Environment [°C][2] |
|---|---|---|---|---|
| ø 50 | PPS | –10...+185<br>–10...+100[1] | –10...+230 | –10...+60[3]<br>–10...+100[4] |
| ø 70 | | | | |
| ø 90 | | | | |
| ø 130 | | | | |
| ø 225 | Stainless steel | –10...+185 | –10...+230 | –10...+100 |

*Tab. 2: Temperature ranges*

1) *With V code MP03*
2) *When using a pilot valve the maximum ambient temperature is +55 °C*
3) *Pilot air connector as push-in connector*
4) *Control air connector as threaded bushing*

**Derating pressure and temperature ranges**

Usage limits of the valve (derating operating pressure)

| Temperature | Operating pressure PN25 | Operating pressure PN40 |
|---|---|---|
| –10...+50 °C | 25 bar | 40 bar |
| 100 °C | 24.5 bar | 39,2 bar |
| 150 °C | 22.4 bar | - |
| 200 °C | 20.3 bar | - |
| 230 °C | 19 bar | - |

*Tab. 3: Derating the operating pressure as per DIN EN 12516-1*

| Temperature | Operating pressure |
|---|---|
| –29...+38 °C | 19 bar |
| 50 °C | 18.4 bar |
| 100 °C | 16.2 bar |
| 150 °C | 14.8 bar |
| 200 °C | 13.7 bar |
| 230 °C | 12.7 bar |

*Tab. 4: Derating the operating pressure as per ASME B16.5/ ASME B16.34 Cl.150*

| Temperature | Operating pressure |
|---|---|
| –10...+50 °C | 14 bar |
| 100 °C | 14 bar |
| 150 °C | 13.4 bar |
| 200 °C | 12.4 bar |
| 230 °C | 11.7 bar |

*Tab. 5: Derating the operating pressure as per JIS B 2220 10K*

valvesgo.com

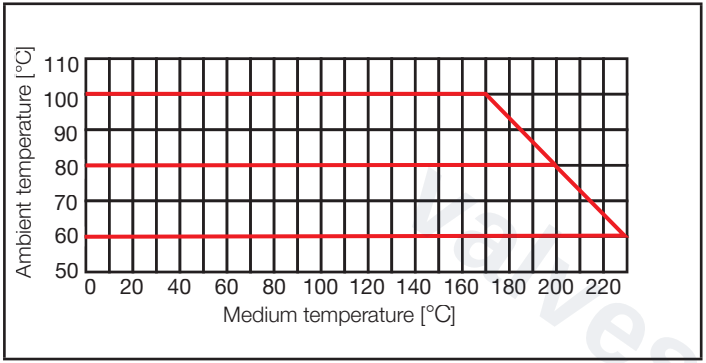


*Fig. 6: Derating Element ANTG 50, 70, 90, 130*

## 7.4.2 Pressure ranges

| Actuator size [mm] | Maximum pilot pressure[5)] |
|---|---|
| ø 50, ø 70, ø 90 | 10 bar |
| ø 130 | 7 bar |
| ø 225, CFA | 7 bar |
| ø 225, CFB | 5 bar |

*Tab. 6: Pressure ranges*

5) *For device variant ø 70/DN 50/MC 13 the max. pilot pressure is limited to 7 bar*

**Operating pressure for control function A, flow direction below seat (standard):**

| DN | Maximum operating pressure [bar] | | | | |
|---|---|---|---|---|---|
| | Actuator size ø [mm] | | | | |
| | 50 | 70 | 90 | 130 | 225 |
| 15 | 25 | 25/40[6)] | - | - | |
| 20 | 16 | 25 | 40[6)] | | |
| 25 | 9.0 | 16 | 25/40[6)] | | |
| 32 | - | 8.5 | 25 | | |
| 40 | | 6.0 | 16 | 25 | |
| 50 | | 4.0 | 10 | 25 | |
| 65 | | - | 5.0 | 16(15[7)]) | 25 (15[7)]) |
| 80 | | | - | 10 | 25 (12.5[7)]) |
| 100 | | | | 6.0 | 16 (10[7)]) |

*Tab. 7: Operating pressure CFA, standard*

6) *Operating pressure 40 bar only with V code MP03*

7) *According to Pressure Equipment Directive for compressible fluids of Group 1 (dangerous gases and vapours according to Art. 3, No. 1.3, letter a, first dash)*

**Pilot pressure for control function A, flow direction below seat (standard):**

| DN | Minimum pilot pressure [bar] | | | | |
|---|---|---|---|---|---|
| | Actuator size ø [mm] | | | | |
| | 50 | 70 | 90 | 130 | 225 |
| 15 | 5.2 | 4.8 | - | | |
| 20 | 5.2 | 4.8 | | | |
| 25 | 5.2 | 4.8 | 5.0 | - | |
| 32 | - | 4.8 | 5.0 | | |
| 40 | | 4.8 | 5.0 | 5.0 | |
| 50 | | 4.8 | 5.0 | 5.0 | |
| 65 | | - | 5.0 | 5.6 | 3.9 |
| 80 | | | - | - | 5.6 |
| 100 | | | | | |

*Tab. 8: Pilot pressure CFA, standard*

**Operating pressure and pilot pressure for control function A, flow direction below seat, reduced spring force (EC04)**

| DN | Maximum operating pressure [bar] | | | | | Minimum pilot pressure [bar] | | | | |
|---|---|---|---|---|---|---|---|---|---|---|
| | Actuator size ø [mm] | | | | | Actuator size ø [mm] | | | | |
| | 50 | 70 | 90 | 130 | 225 | 50 | 70 | 90 | 130 | 225 |
| 15 | 14 | 16 | – | – | – | 3.2 | 2.5 | – | – | – |
| 20 | 6 | 12 | | | | | | | | |
| 25 | 3 | 6 | | | | | | | | |
| 32 | – | 3.5 | 9 | | | – | | 2.5 | | |
| 40 | | 2 | 6 | 16 | | | | | 2.5 | |
| 50 | | – | 3.5 | 10 | | | – | | | |
| 65 | | | – | 7.5 | 20 (15[8]) | | | – | 3.2 | 3.0 |
| 80 | | | | 5 | 18 (12.5[8]) | | | | | 3.8 |
| 100 | | | | – | 12 (10[8]) | | | | – | |

*Tab. 9: Operating and pilot pressure CFA, reduced spring force (EC04)*

8) *According to Pressure Equipment Directive for compressible fluids of Group 1 (dangerous gases and vapours according to Art. 3, No. 1.3, letter a, first dash)*


valvesgo.com

### Required minimum control pressure depending on the operating pressure

In the following graphs the required minimum control pressure is shown for control functions A, B and I depending on the operating pressure.

### Control function A, flow direction above the seat

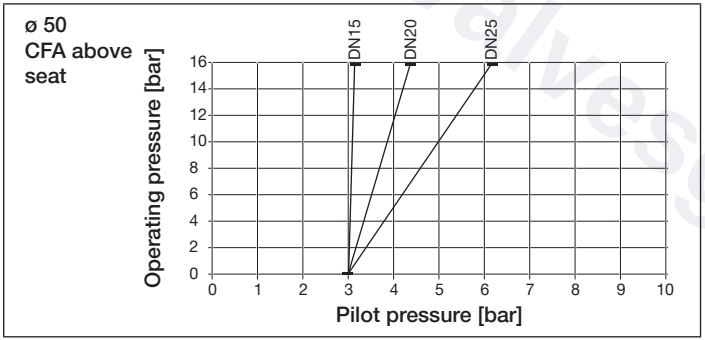


*Fig. 7: Pressure diagram, actuator ø 50 mm, control function A, flow direction above the seat.*

### Control function A, flow direction above the seat

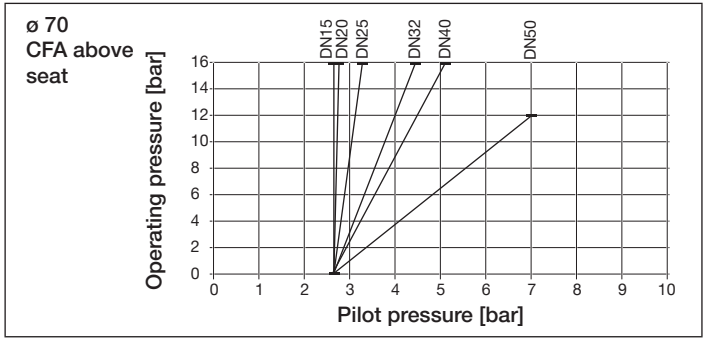


*Fig. 8: Pressure diagram, actuator ø 70 mm, control function A, flow direction above the seat*

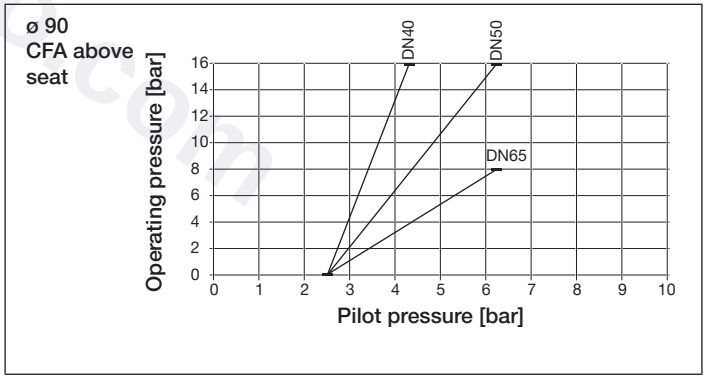


*Fig. 9: Pressure diagram, actuator ø 90 mm, control function A, flow direction above the seat*


valvesgo.com

## Control function B and I, flow direction below seat

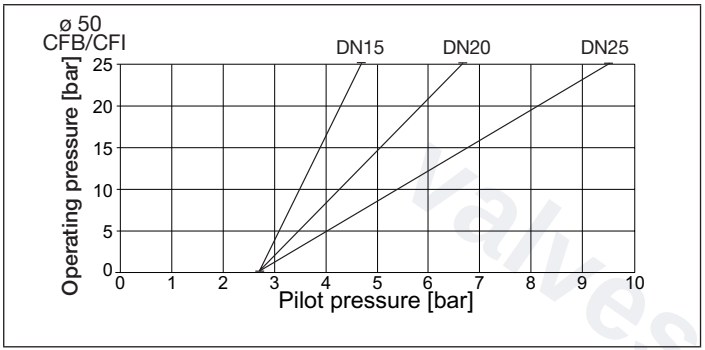


*Fig. 10: Pressure diagram, actuator ø 50 mm, control function B and I, flow direction below seat*

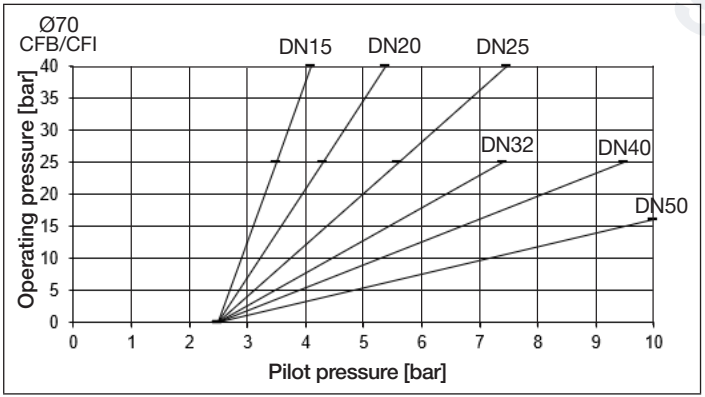


*Fig. 11: Pressure diagram, actuator ø 70 mm, control function B and I, flow direction below seat*

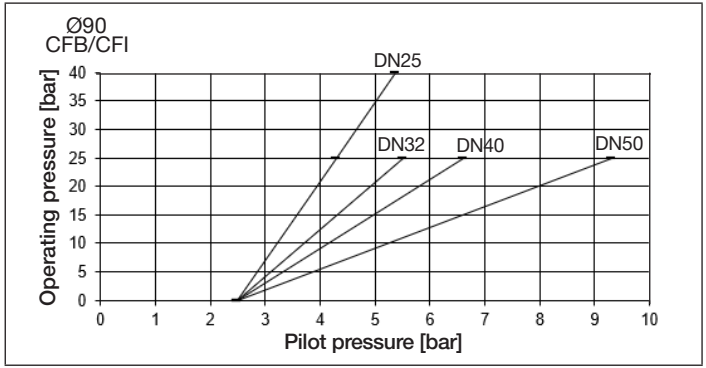


*Fig. 12: Pressure diagram, actuator ø 90 mm, control function B and I, flow direction below seat*

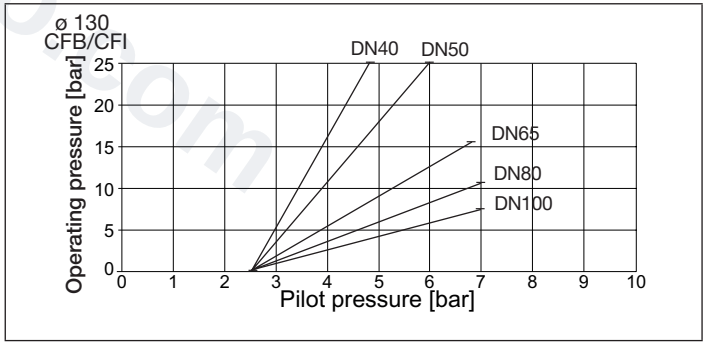


*Fig. 13: Pressure diagram, actuator ø 130 mm, control function B and I, flow direction below seat*

valvesgo.com

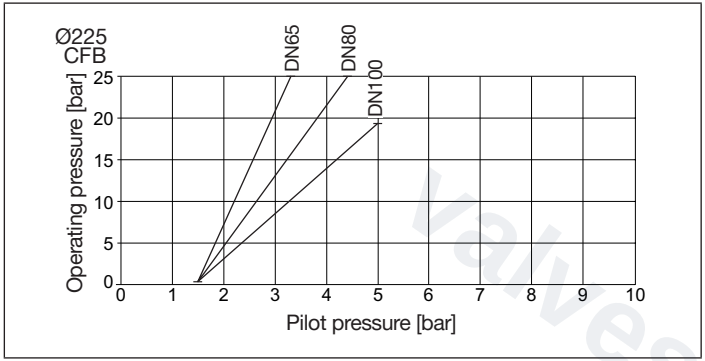


*Fig. 14: Pressure diagram, actuator ø 225 mm, control function B, flow direction below seat*

## 7.5 General technical data

| | |
|---|---|
| Actuator size | See type label |
| Control function | See type label, for description of control functions see chapter “6.2” |
| Degree of protection | IP67 as per IEC 529/EN 60529 |

**Media**

| | |
|---|---|
| Control medium | Neutral gases, air |
| Flow media | Water, alcohols, fuels, hydraulic fluids, saline solutions, lyes, organic solvents |

**Materials**

| | |
|---|---|
| Valve body | 316L |
| Actuator | PPS and stainless steel |
| Sealing elements | FKM and EPDM |
| Spindle seal | PTFE V-rings with spring compensation (with silicone grease) |
| Seat seal | PTFE (NBR, EPDM, FKM, PEEK on request) |
| Spindle | 1.4401 / 1.4404 |
| Spindle guide up to DN65 | PEEK |
| Spindle guide from DN80 | 1.4401 / 1.4404 |

**Ports**

| | |
|---|---|
| Pilot air port | Push-in connector 6/4 mm or 1/4” more on request |
| Medium connection | Socket: G ½–G 4 (NPT, RC on request)<br>Welded connection: as per ISO 4200, DIN 11850 R2<br>other connections on request |

valvesgo.com

# 8 INSTALLATION

**WARNING**

**Risk of injury due to improper installation.**

- Installation may only be carried out by qualified personnel using suitable tools.
- Secure equipment against unintentional activation.
- Ensure that the system starts up in a controlled manner only.

**For control function I – risk of pilot pressure failure.**

The valve stays in an undefined position in the event of a pilot pressure failure.

- To ensure a controlled restart of the device, apply pilot pressure and activate the medium.

**Risk of injury due to moving parts.**

- Do not reach into openings in the device.

**CAUTION**

**Risk of injury due to heavy device.**

During transportation or installation work, a heavy device may fall down and cause injuries.

- Transport, install and remove heavy device with the aid of a second person only.
- Use suitable tools.

**ATTENTION**

**Loose screw connection of the valve body connection with high mechanical stress or in applications with increased temperatures.**

If the pipeline is subject to high mechanical stress (vibrations) or in applications with temperatures above 140 °C, the screw connection on the valve body connection must be checked before installation and regularly during operation. (For tightening torques, see table “Tab. 10”)

## 8.1 Notes on installation

- The installation location must be easily accessible and provide sufficient clearance for installation, removal and maintenance of the device
- Use suitable lifting gear to lift a heavy device
- Only lift heavy valves by the valve body and pneumatic actuator, not by the control unit (if present)
- Ensure that the pipes are aligned before connecting the valve
- Observe the direction of flow. Observe the information on the type label

## 8.2 Before installation

- The globe valve can be installed in any position, preferably with the actuator facing upwards

valvesgo.com


valvesgo.com

### 8.2.1 Preparatory work

→ Before working on the system or device, switch off the pressure and vent or drain the lines.

→ Clear impurities from pipelines (seal material, metal chips,etc.).

### 8.2.2 Removing actuator from the valve body

**For devices with welded connection**

**ATTENTION**

**For valves with a mounted control unit:**

When welding the valve body into the pipeline, the control unit must not be installed.

- Uninstall the control unit from the actuator (see chapter on installation in the operating instructions of the corresponding control unit).

→ Clamp valve body into a collet.

**ATTENTION**

**Damage to the seat seal or seat contour!**

- When removing the actuator, the valve must be in the open position.

→ For control function A pressurise the pilot air port 1 with compressed air (5 bar): Valve opens.

→ Place on the body connection with a suitable open-end wrench.

→ Unscrew actuator from the valve body.

**For other device variants:**

→ Only uninstall the actuator if required by the customer.

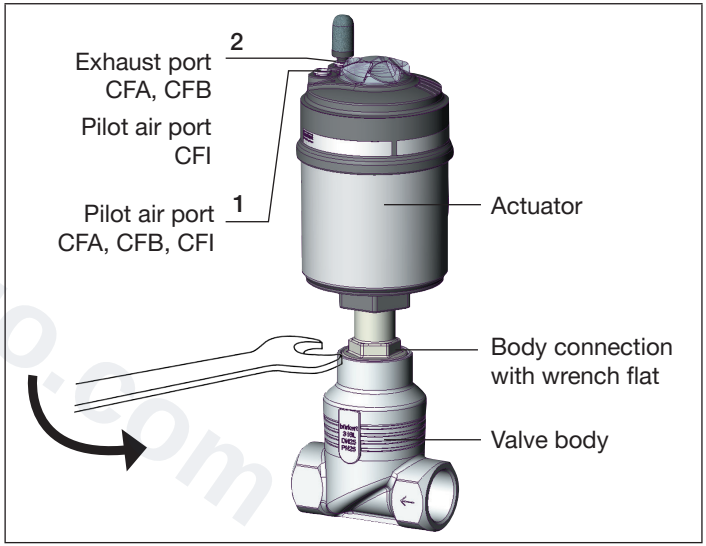


*Fig. 15: Removing actuator from the valve body*


valvesgo.com

## 8.3 Installation

**WARNING!**

**Risk of injury due to improper installation!**

Failure to observe the tightening torque value is dangerous due to the risk of damage to the device.

- Use an open-end wrench for installation, never a pipe wrench.
- Observe tightening torque (see “Tab. 10”).

**Dirt trap for devices with approval according to DIN EN 161**

According to DIN EN 161 "Automatic shut-off valves for gas burners and gas appliances", a dirt trap must be installed upstream of the valve. The dirt trap must prevent the penetration of a 1 mm test pin.

→ If the approval also applies to the stainless steel valve body, such a dirt trap must be attached in front of the globe valve.

### 8.3.1 Installing the body

**Welded connection**

→ Weld or bond valve body in pipeline system.

**Other body variants**

→ Connect valve body to pipeline.

### 8.3.2 Install actuator (welded connection)

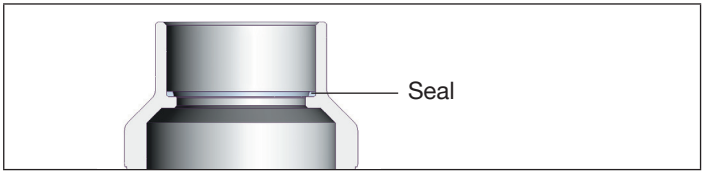


*Fig. 16: Seal*

→ Check seal and replace.

**WARNING**

**Risk due to incorrect lubricants.**

Unsuitable lubricant may contaminate the medium. There is a risk of explosion in oxygen applications!

- For specific applications, e.g. oxygen or analysis applications, use approved lubricants only.

→ Grease the external thread of the body connection (e.g. using Klüberpaste UH1 96-402 from Klüber).

**ATTENTION**

**Damage to the seat seal or seat contour**

- When installing the actuator, the valve must be in the open position.

→ For control function A pressurise the pilot air port 1 with compressed air (5 bar): Valve opens.

→ Screw actuator into the valve body. Observe tightening torque (see “Tab. 1: Conversion of actuator size”).


valvesgo.com

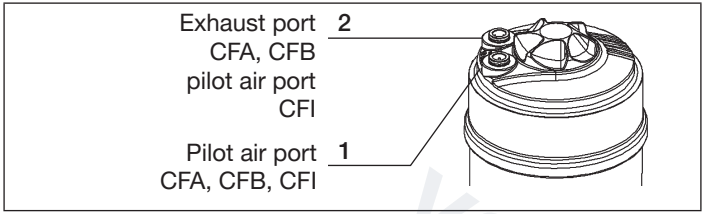


*Fig. 17: Ports*

| DN connection (valve body) | Tightening torque for body connection [Nm] |
|---|---|
| 15 | 45 ± 3 |
| 20 | 50 ± 3 |
| 25 | 60 ± 3 |
| 32 | 65 ± 3 |
| 40 | |
| 50 | 70 ± 3 |
| 65 | 100 ± 3 |
| 80 | 120 ± 5 |
| 100 | 150 ± 5 |

*Tab. 10: Tightening torques for body connection*

### 8.3.3 Install control unit

For a description see chapter "Installation" in the operating instructions for the corresponding control unit.

### 8.3.4 Turning actuator

The position of the ports can be seamlessly aligned by turning the actuator 360°.

**ATTENTION**

**Damage to the seat seal or seat contour.**

- When turning the actuator, the valve must be in the open position.

→ Clamp valve body in a collet (only for valves which have not yet been installed).

→ For control function A pressurise the pilot air port 1 with compressed air (5 bar): Valve opens.

→ Place on the body connection with a suitable open-end wrench.

→ Place a suitable open-end wrench to the hexagon of the actuator bottom (actuator size 225).

**WARNING**

**Risk of injury from discharge of pressure and escaping medium.**

The body connection can loosen when rotated incorrectly.

- Only turn the actuator **in the specified direction**.

→ Move the actuator into the required position by **turning it counterclockwise** (seen from below).

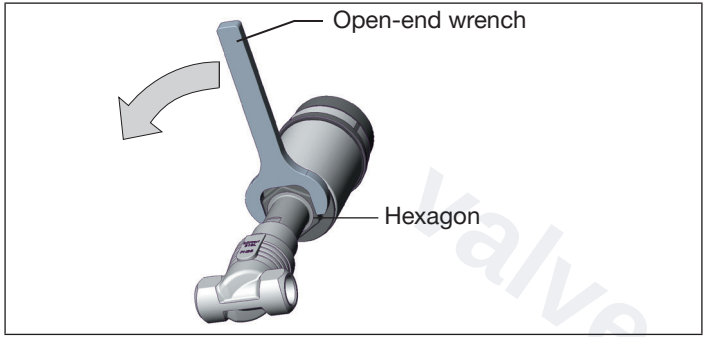


*Fig. 18: Turning actuator*

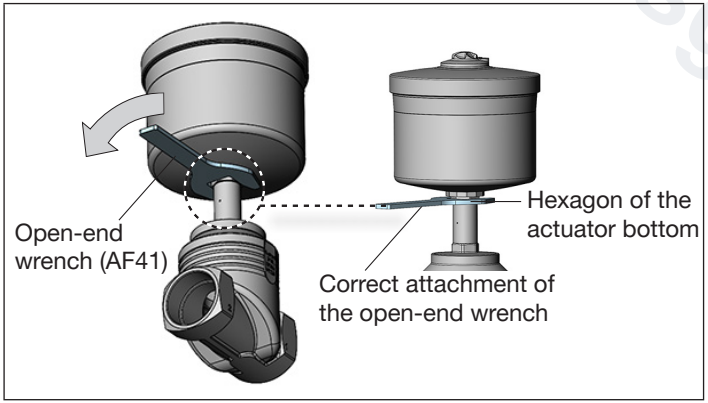


*Fig. 19: Turning actuator for actuator size 225*

## 8.4 Attaching a sensor or fitting to the relief bore

The optional variant (V-Code NA99) for leak detection and discharge allows for the connection of a sensor or a fitting to the relief bore.

**ATTENTION**

**Damage caused by operating medium in the actuator.**

Do not attach any closed vessels to the relief bore.

When attaching anything to the relief bore, ensure that there is no back pressure that could hinder the flow of the leakage. Otherwise there is a risk of operating medium entering the actuator and causing permanent damage to it.

**ATTENTION**

**Risk of failure due to damage to the actuator.**

Operating medium that has entered the actuator can weaken it to such an extent that the actuator fails during normal operation.

Sensors and fittings with M5 threads can be used with the M4 variant with the help of the included adapter.

The circlip serves as a stop to prevent the item being screwed in too far.

Always seal the thread when screwing in, e.g. with PTFE tape or thread sealant.

valvesgo.com


valvesgo.com

**Note the wall thickness:**

- M4 variant: 2.3 mm
- M5 variant: 3.5 mm

If no adapter is used, ensure that the screwed-in threaded pin of the component used does not exceed the following dimensions.

| Actuator size | Description | DN | Thread of relief bore | Incl. enclosed adapter |
|---|---|---|---|---|
| 50 | D | 20/25 | M4x0.35 | M5x0.8 |
| 70 | M | 20/25 | M4x0.35 | M5x0.8 |
| 90 | N | 20/25 | M5x0.8 | - |

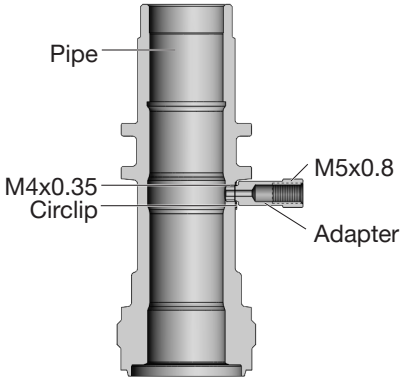


*Fig. 20: Adapter for relief bore*

## 8.5 Connect device pneumatically

**DANGER**

**Risk of injury from high pressure in the system.**

- Before loosening lines and valves, turn off the pressure and vent the lines.

**WARNING**

**Risk of injury due to unsuitable connection hoses.**

Hoses that cannot withstand the pressure and temperature range can cause hazardous situations.

- Only use hoses that are permitted for the specified pressure and temperature range.
- Note the data sheet information from the hose manufacturers.

**For control function I – risk of pilot pressure failure.**

With control function I, the control unit and reset are pneumatic. No defined position is reached during a pressure failure.

- To ensure a controlled restart of the device, first apply pilot pressure and then activate the medium.

### 8.5.1 Connecting the control medium

If the position of the pilot air ports is unfavorable for installing the hoses, these can be seamlessly aligned by rotating the actuator by 360°.

The procedure is described in chapter “8.3.3 Install control unit”.

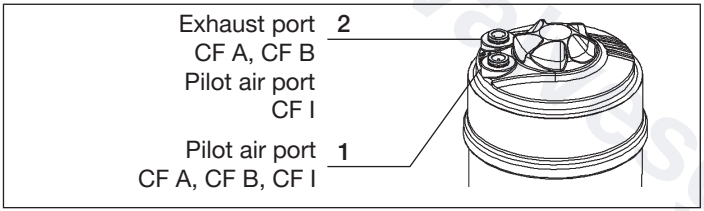


*Fig. 21: Ports*

**Control function A and B:**

→ Connect control medium to pilot air port **1** of the actuator (see “Fig. 21”).

Silencer
For devices with push-in connection, the silencer to reduce the exhaust air volume is supplied unattached.

→ Connect the silencer to the free exhaust port **2** (see “Fig. 21”).

For usage in an aggressive environment, we recommend using a pneumatic hose to drain all free pneumatic ports in a neutral atmosphere.

**Control function I:**

→ Connect control medium to pilot air port **1** and **2** of the actuator (see “Fig. 17: Ports”)
Pressure on pilot air port 1 opens the valve.
Pressure on pilot air port 2 closes the valve.

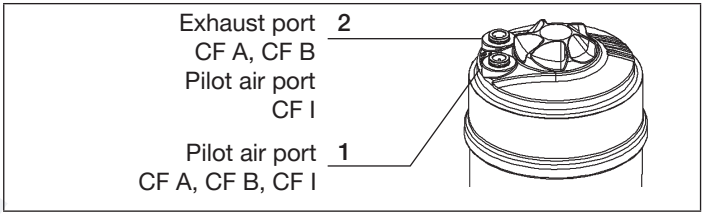


*Fig. 22: Ports*

**Pilot air hose:**

Pilot air hoses of sizes 6/4 mm or ¼" can be used.

Optionally a pilot air port via G ⅛ thread is possible.

## 8.6 Start-up

Perform the Teach function after installing the device. This function presets the closed-loop control parameters.

For a description, please refer to the operating instructions of the control unit.


valvesgo.com

## 8.7 Disassembly

**DANGER**

**Risk of injury from discharge of pressure and escaping medium.**

Dismantling a device which is under pressure is hazardous due to a sudden discharge of pressure or escaping medium.

- Before disassembly, shut off the pressure and vent all lines.

→ Disconnect the pneumatic connection.

→ Disassemble the device.

# 9 ELECTRICAL CONTROL UNIT

The Type 2101 valve can be combined with the following control units:

- Type 8690 Pneumatic control unit
- Type 8691 Control head (actuator size ⌀ 70–⌀ 225)
- Type 8695 Control head (actuator size ⌀ 50)
- Type 8645 Automation system FreeLINE
- Type 6012 Pilot valve
- Type 6014 P Pilot valve

The electrical port of the pilot valve or the control units is described in the respective operating instructions of the pilot valve/control unit.

# 10 MAINTENANCE, CLEANING

**DANGER**

**Risk of injury from high pressure in the system.**

- Before loosening lines and valves, turn off the pressure and vent the lines.

**Risk of injury from electric shock.**

- Before reaching into the system, switch off the power supply and secure against reactivation.
- Observe the applicable accident prevention and safety regulations for electrical devices.

**WARNING**

**Risk of injury due to improper maintenance work.**

- Maintenance may be carried out by authorised technicians only!
- Use an open-end wrench, never a pipe wrench, to screw the valve body or actuator in or out, and observe the tightening torque.

**Risk of injury due to unintentional activation of the system and uncontrolled restart.**

- Secure the system against unintentional activation.
- Following maintenance, ensure a controlled restart.

valvesgo.com

**WARNING**

**For control function I – risk of pilot pressure failure.**

With control function I, the control unit and reset are pneumatic. No defined position is reached during a pressure failure.

- To ensure a controlled restart of the device, first apply pilot pressure and then activate the medium.

**Risk of injury due to moving parts in the device.**

- Do not reach into openings.

## 10.1 Maintenance work

**Actuator:**

When used in accordance with these operating instructions, the actuator of the globe valve is maintenance-free.

**Wearing parts of the globe valve:**

Parts which are subject to natural wear are:

- Seals
- Swivel plate

→ If there is a leak, replace the respective wearing part with a corresponding spare part. (For spare part sets and assembly tools see chapter “12 Spare parts”).

Replacement of the wearing parts is described in chapter “12 Spare parts”.

**Visual inspection:**

According to the usage conditions, perform regular visual inspections:

→ Check medium ports for tightness.

→ Check relief bore on the pipe for leaks.

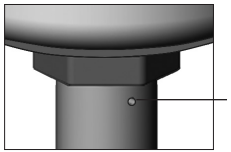


*Fig. 23: Relief bore*

### 10.1.1 Cleaning

Commercially available cleaning agents can be used to clean the outside.

**ATTENTION**

**Avoid causing damage with cleaning agents.**

- Before cleaning, check that the cleaning agents are compatible with body materials and seals.


valvesgo.com

## 10.2 Replacing wearing parts

### 10.2.1 Replacing the valve seat

The valve set consists of

- swivel plate with seal
- pin
- seal

To change the valve set, first remove the actuator from the valve body.

**DANGER**

**Risk of injury from discharge of pressure and escaping medium.**

Dismantling a device which is under pressure is hazardous due to a sudden discharge of pressure or escaping medium.

▸ Before disassembly, shut off the pressure and vent all lines.

**WARNING**

**Risk of injury due to using wrong tool.**

Performing installation work, using unsuitable tools, is hazardous due to possible damage to the device.

▸ To remove the actuator from the valve body, use an open-end wrench, never a pipe wrench.

**Remove actuator from the valve body:**

→ Clamp valve body in a collet (only for valves which have not yet been installed).

**ATTENTION**

**Damage to the seat seal or seat contour.**

▸ When removing the actuator, the valve must be in the open position.

→ For control function A and I pressurise the pilot air port 1 with compressed air (5 bar): Valve opens.

→ Place on the body connection with a suitable open-end wrench.

→ Unscrew actuator from the valve body.

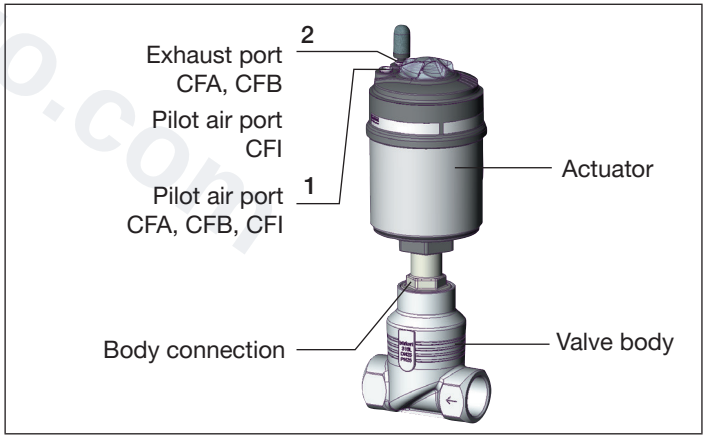


*Fig. 24: Part designation*

valvesgo.com

### Replacing valve set

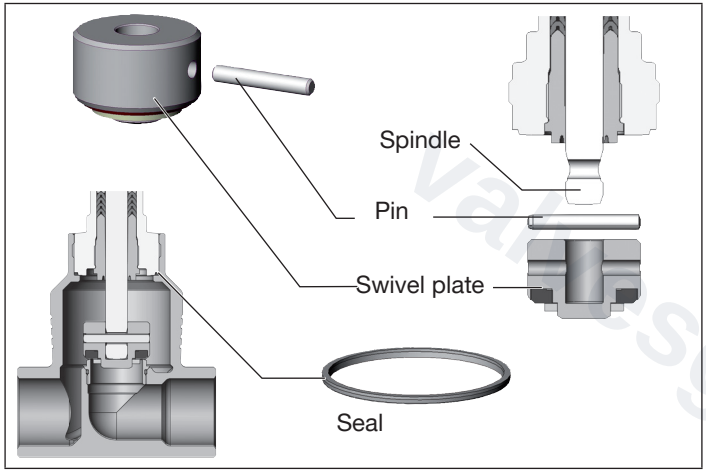


*Fig. 25: Valve set*

→ Support swivel plate on the cylindrical part using a prism or something similar.

→ Knock out pin using a suitable pin punch.
**Pin punch ø 3 mm**, for 10 mm spindle diameter on the swivel plate.
**Pin punch ø 5 mm,** for 14 mm spindle diameter on the swivel plate.
**Pin punch ø 7 mm,** for 22 mm spindle diameter on the swivel plate.

→ Remove swivel plate.

→ Connect new swivel plate to the spindle.

→ Align boreholes in the swivel plate and spindle.

→ Support swivel plate on the cylindrical part using a prism or something similar.

→ Insert pin into the borehole.

→ Caulk pin boreholes on both sides of the swivel plate using a chisel or centre punch.

### Installing actuator on valve body

→ Replace the seal if necessary.

**WARNING**

**Risk due to incorrect lubricants.**

Unsuitable lubricant may contaminate the medium. There is a risk of explosion in oxygen applications!

- For specific applications, e.g. oxygen or analysis applications, use approved lubricants only.

→ Grease the external thread of the body connection (e.g. using Klüberpaste UH1 96-402 from Klüber).


valvesgo.com

**ATTENTION**

**Damage to the seat seal or seat contour.**

- When installing the actuator, the valve must be in the open position.

→ For control function A and I pressurise the pilot air port 1 with compressed air (5 bar): Valve opens.

→ Screw actuator into the valve body. Observe tightening torque (see "Tab. 10: Tightening torques for body connection").

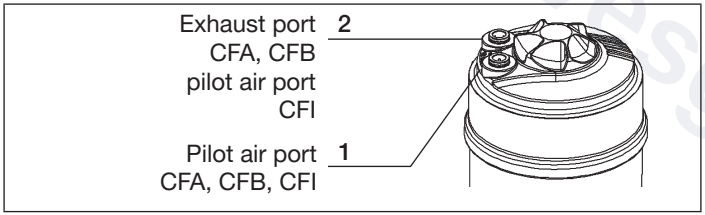


*Fig. 26: Ports*

| DN connection (valve body) | Tightening torque for body connection [Nm] |
|---|---|
| 15 | 45 ± 3 |
| 20 | 50 ± 3 |
| 25 | 60 ± 3 |
| 32 | 65 ± 3 |
| 40 | |
| 50 | 70 ± 3 |
| 65 | 100 ± 3 |
| 80 | 120 ± 5 |
| 100 | 150 ± 5 |

*Tab. 11: Tightening torques for body connection*

If the position of the pilot air ports is unfavourable for installing the hoses, these can be seamlessly aligned by rotating the actuator by 360°.

The procedure is described in chapter "8.3.3 Install control unit".

## 10.2.2 Replacing the valve seat set

The actuator must be uninstalled when replacing the valve seat.
The necessary steps are described in chapter “10.2.1 Replacing the valve seat” .

The valve seat set consists of

- valve seat
- seal
- O-ring (depending on variant)
- lubricant

**DANGER**

**Risk of injury from discharge of pressure and escaping medium.**

Dismantling a device which is under pressure is hazardous due to a sudden discharge of pressure or escaping medium.

▸ Before disassembly, shut off the pressure and vent all lines.

**WARNING**

**Risk of injury due to improper installation.**

Failure to observe the tightening torque value is dangerous due to the risk of damage to the device.

▸ Only perform the replacement with special assembly tools (for order numbers see chapter “12.2 Installation tools”).

▸ Observe tightening torque (see “Tab. 12” and “Tab. 13”).

→ Replace the valve seat as described below when the actuator is removed.

**Replacing valve seat**

→ Use the assembly tool (with suitable tool attachment) and a wrench to unscrew the old valve seat.

→ Clean the body thread and seal surface with compressed air.

→ Attach a new valve seat to the assembly tool.

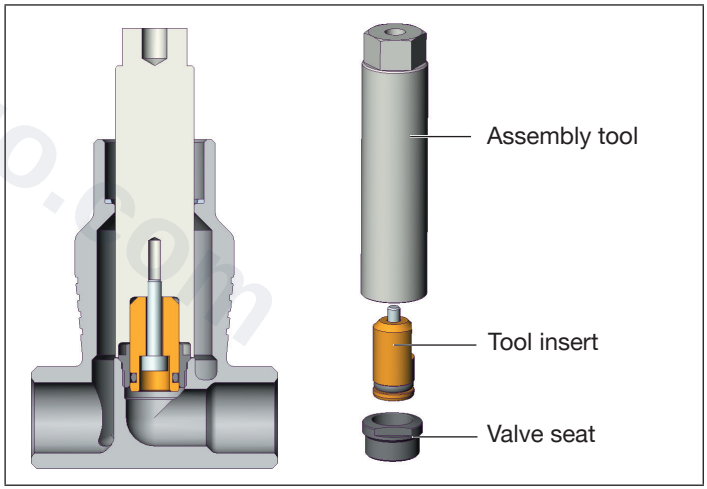


*Fig. 27: Replacing the valve seat*

valvesgo.com


valvesgo.com

**WARNING**

**Danger due to incorrect lubricants.**

Unsuitable lubricant may contaminate the medium. There is a risk of explosion in oxygen applications.

- For specific applications, e.g. oxygen or analysis applications, use approved lubricants only.

→ Grease the valve seat thread using a lubricant (e.g. Klüber-paste UH1 96-402 from Klüber).

→ Manually screw attached valve seat into the body thread.

→ Tighten valve seat using torque wrench. Observe tightening torque (see “Tab. 12”).

| Valve seat size | Tightening torque [Nm] |
|---|---|
| | Coated valve seat |
| 15 | 20 ± 3 |
| 20 | 28 ± 3 |
| 25 | 40 ± 5 |
| 32 | 65 ± 5 |
| 40 | 85 ± 8 |
| 50 | 120 ± 8 |
| 65 | 150 + 10 |
| 80 | 180 + 10 |
| 100 | 220 + 10 |

*Tab. 12: Tightening torques valve seat assembly*

**Install actuator (with control unit) on the valve body**

→ Replace the seal if necessary.

**WARNING**

**Danger due to incorrect lubricants.**

Unsuitable lubricant may contaminate the medium. There is a risk of explosion in oxygen applications.

- For specific applications, e.g. oxygen or analysis applications, use approved lubricants only.

→ Grease the external thread of the body connection (e.g. using Klüberpaste UH1 96-402 from Klüber).

**ATTENTION**

**Damage to the valve seat seal or seat contour.**

- When installing the actuator, the valve must be in the open position.

→ For **control function A and I**
**Without control unit:** Pressurise pilot air port 1 with com-pressed air (5 bar). Valve opens.
**With control unit:** Open the valve in accordance with the operating instructions of the control unit.

→ Screw actuator into the valve body. Observe tightening torque (see”Tab. 13”).


valvesgo.com

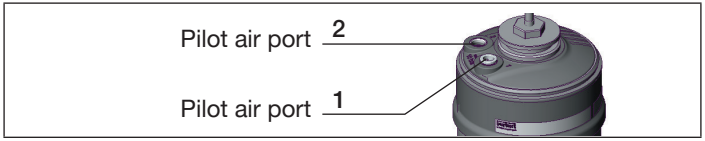


*Fig. 28: Ports*

| DN connection (valve body) | Tightening torque for body connection [Nm] |
|---|---|
| 15 | 45 ± 3 |
| 20 | 50 ± 3 |
| 25 | 60 ± 3 |
| 32 | 65 ± 3 |
| 40 | |
| 50 | 70 ± 3 |
| 65 | 100 ± 3 |
| 80 | 120 ± 5 |
| 100 | 150 ± 5 |

*Tab. 13: Tightening torques for body connection*

If the position of the pilot air ports is unfavourable for installing the hoses, these can be seamlessly aligned by rotating the actuator by 360°.

The procedure is described in chapter “8.3.4 Turning actuator” on page 21 .

### 10.2.3 Replacing the packing gland

For device combination ø 70/DN50, replacing the packing gland will be possible as of series-production status January 2017.

The seal set for the packing gland includes

| | |
|---|---|
| **SP10/SP14**<br>• 1 support ring<br>• 7 chevron seals<br>• 2 thrust collars<br>• 1 compression spring<br>• 1 spindle guide<br>• 1 seal<br>• lubricant | |
| **SP22**<br>• 1 support ring<br>• 7 chevron seals<br>• 2 thrust collars<br>• 1 compression spring<br>• 1 spacer<br>• 1 seal<br>• lubricant | |

*Tab. 14: Seal set for packing gland*

valvesgo.com

**DANGER**

**Risk of injury from discharge of pressure and escaping medium.**

Dismantling a device which is under pressure is hazardous due to a sudden discharge of pressure or escaping medium.

- Before disassembly, shut off the pressure and vent all lines.

**WARNING**

**Risk of injury due to using wrong tool.**

Performing installation work, using unsuitable tools, is hazardous due to possible damage to the device.

- To remove the actuator from the valve body, use an open-end wrench, never a pipe wrench.
- To replace the packing gland, use special installation wrench, modified socket wrench or open-end wrench.
- Observe tightening torques.

To replace the packing gland, first remove the actuator from the valve body and remove the swivel plate.

### Removing actuator from the valve body

→ Clamp valve body in a collet (only for valves which have not yet been installed).

**ATTENTION**

**Damage to the seat seal or seat contour.**

- When removing the actuator, the valve must be in the open position.

→ For control function A and I pressurise the pilot air port 1 with compressed air (5 bar): Valve opens.

→ Place on the body connection with a suitable open-end wrench.

→ Unscrew actuator from the valve body.

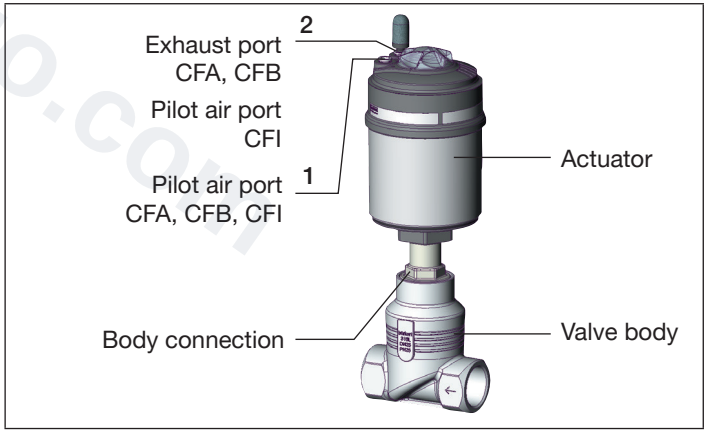


*Fig. 29: Part designation*


valvesgo.com

### Removing swivel plate

→ Knock out pin using a suitable pin punch.
**Pin punch ø 3 mm**, for 10 mm spindle diameter on the swivel plate.
**Pin punch ø 5 mm,** for 14 mm spindle diameter on the swivel plate.
**Pin punch ø 7 mm,** for 22 mm spindle diameter on the swivel plate.

→ Remove swivel plate.

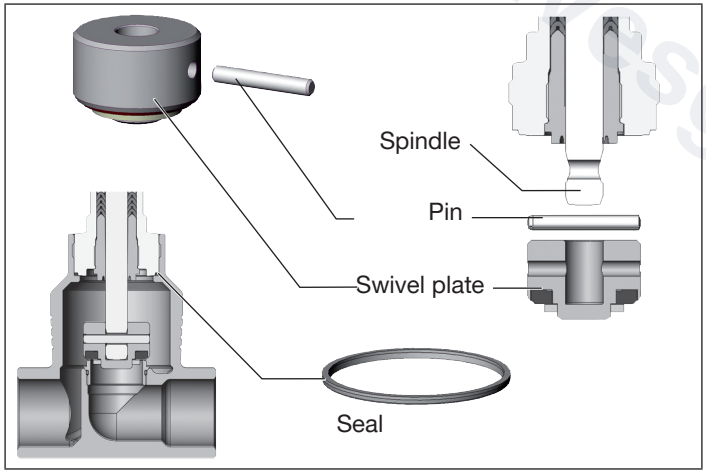


*Fig. 30: Valve set*

### Replacing packing gland

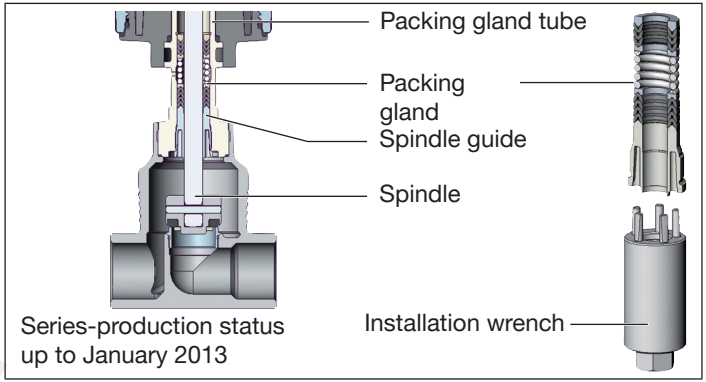


*Fig. 31: Changing packing gland (series-production status up to January 2013)*

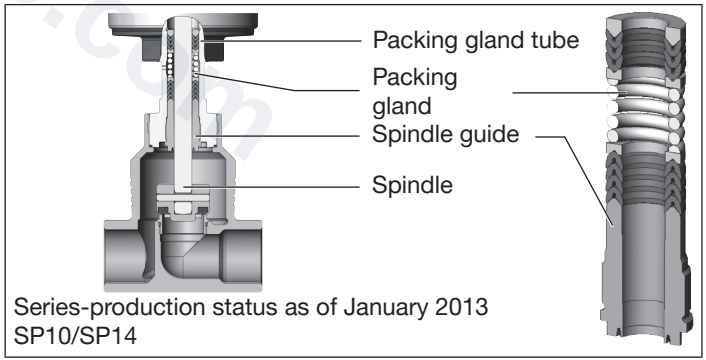


valvesgo.com


valvesgo.com

*Fig. 32: Changing packing gland SP10/SP14 (series-production status as of January 2013)*

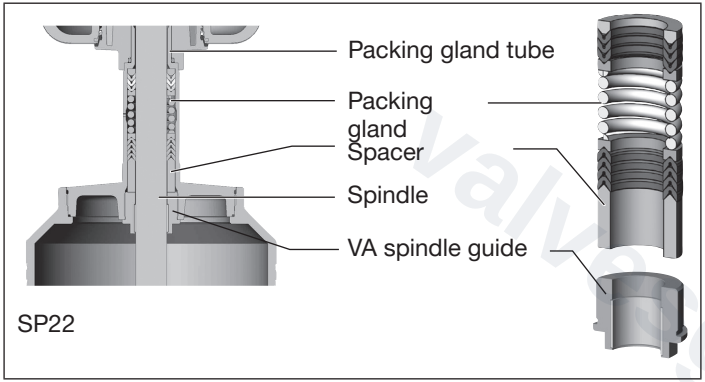


*Fig. 33: Replacing the packing gland SP22*

Series-production status up to January 2013:

→ Unscrew spindle guide using the installation wrench[9] and an open-end wrench.

Series-production status as of January 2013 SP10/SP14:

→ Unscrew spindle guide using a modified socket wrench[9].

SP22:

→ Unscrew VA spindle guide using an open-end wrench.

9) *The assembly wrench or modified socket wrench are available from your Bürkert sales department.*

**WARNING**

**Risk of injury due to parts being ejected.**

When the spindle opening is exposed, the individual parts of the packing gland will be pressed out at an undefined speed when the pilot air port is pressurised.

- Before pressurising with pilot air, safeguard the area around the outlet, (e.g. place spindle on a firm surface).

→ For **control function A and I** pressurise the pilot air port **1** with 6–8 bar (see "Fig. 29: Part designation").

→ For **control function B** pressurise the pilot air port **2** with 6–8 bar (see "Fig. 29: Part designation").

→ Grease the individual parts of the new packing gland with the supplied lubricant.

→ Place individual parts on the spindle in the specified direction and sequence (as shown in "Fig. 34: Seal set for packing gland").

→ Push the packing gland into the packing gland tube.

→ Screw in spindle guide/VA spindle guide again using the socket wrench/open-end wrench. Observe tightening torque (see "Tab. 15: Tightening torques spindle guide")!

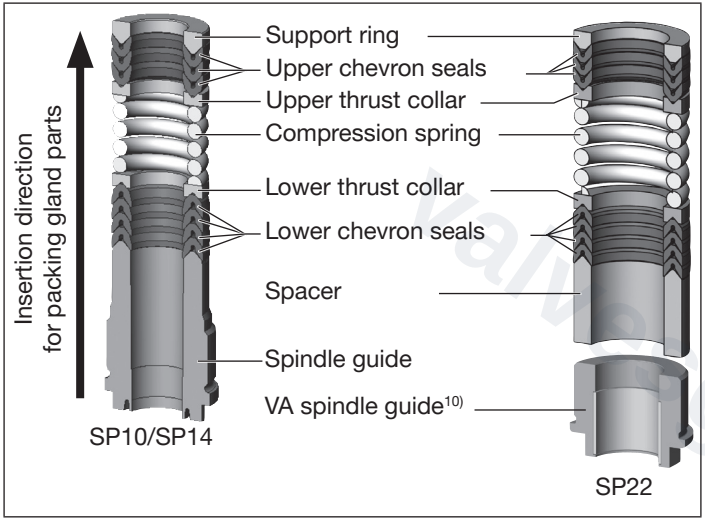


*Fig. 34: Seal set for packing gland*

| Tightening torques spindle guide | |
|---|---|
| **Spindle diameter** | **Tightening torque [Nm]** |
| 10 mm | 6 |
| 14 mm | 15 |
| 22 mm | 60 |

*Tab. 15: Tightening torques spindle guide*

### Installing swivel plate

→ Connect swivel plate to the spindle.

→ Align boreholes in the swivel plate and spindle.

→ Support swivel plate on the cylindrical part using a prism or something similar.

→ Insert pin into the borehole.

→ Caulk pin boreholes on both sides of the swivel plate using a chisel or centre punch.

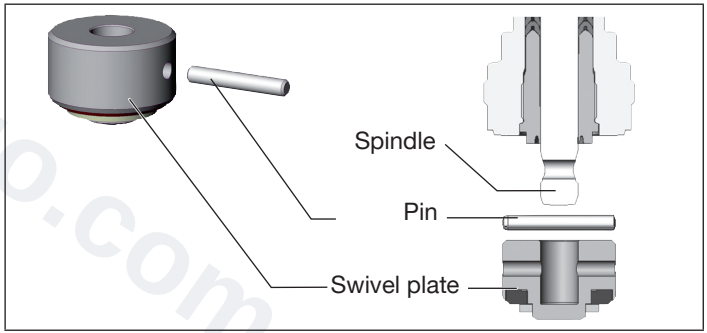


*Fig. 35: Swivel plate*

### Installing actuator on valve body

For a description see

"Installing actuator on valve body" on page 28.

10) *Is not included in the seal set.*


valvesgo.com

# 11 FAULTS

| Fault | Elimination |
|---|---|
| Actuator does not switch | Pilot air port interchanged[11)]<br>CFA → Connect pilot air port 1<br>CFB → Connect pilot air port 1<br>CFI → Pilot air port 1: open<br>Pilot air port 2: closing |
| | Pilot pressure too low<br>→ Observe pressure specifications on the type label |
| | Operating pressure too high<br>→ Observe pressure specifications on the type label |
| | Flow direction interchanged<br>→ Observe direction of arrow on the type label |

| Fault | Elimination |
|---|---|
| Valve is not tight | Dirt between seal and valve seat<br>→ Install dirt trap |
| | Valve seat seal worn<br>→ Install new swivel plate |
| | Flow direction interchanged<br>→ Observe direction of arrow on the type label |
| | Operating pressure too high<br>→ Observe pressure specifications on the type label |
| | Pilot pressure too low<br>→ Observe pressure specifications on the type label |
| Valve is leaking on the relief bore | Packing gland worn<br>→ Replace packing gland or actuator |

11) *see "8.5 Connect device pneumatically"*

valvesgo.com

# 12 SPARE PARTS

**WARNING**

**Risk of injury when opening the actuator.**

The actuator contains a spring under tension. The spring that ejects when the actuator opens may cause injuries.

- The actuator must not be opened.

**CAUTION**

**Risk of injury and/or damage due to incorrect parts.**

Incorrect accessories and unsuitable spare parts may cause injuries and damage the device and the area around it.

- Use only original accessories and original spare parts from Bürkert.

## 12.1 Replacement part set

The following replacement part sets are available for the globe valve Type 2101:

- **Valve set,** consists of swivel plate with seal, pin and seal.
- **Seal set for packing gland,** consisting of the individual parts of the packing gland, seal and lubricant (the modified socket wrench is not included in the seal set).
- **Valve seat set,** consists of valve seat, O-ring (depending on variant) and seal.

| Valve set (PTFE seal) | |
|---|---|
| Orifice DN | Order number |
| 15 | 149 606 |
| 20 | 011 171 |
| 25 | 160 737 |
| 32 | 011 208 |
| 40 | 011 209 |
| 50 | 216 431 |
| 50 (actuator size ø 70)[12)] | 307 392 |
| 65 | 241 777 |
| 65 (actuator size ø 225) | 155 491 |
| 80 | 155 492 |
| 100 | 155 493 |

*Tab. 16: Valve set (PTFE seal)*

valvesgo.com


valvesgo.com

| Seal set for packing gland | | | | |
|---|---|---|---|---|
| Body DN | Actuator size | Order number Standard variant | Order number Water outlet (up to 200 °C) | Order number high-temperature outlet (up to 230 °C) |
| 15–50[12)] | ø 50 | 216 433 | 372 661 | 372 662 |
| | ø 70 | | | |
| 32–65 | ø 90 | 216 435 | 372 653 | 372 655 |
| | ø 130 | | | |
| 80–100 | ø 130 | 252 545 | – | 200 23063 |
| 65–100 | ø 225 | 200 60377 | – | 200 60378 |

*Tab. 17: Seal set for packing gland*

| VA spindle guide for packing gland | | | |
|---|---|---|---|
| **Spindle ø** | **Orifice DN** | **Actuator size** | **Order number** |
| 22 | 80–100 | ø 130 | 252 543 |
| 22 | 65 - 100 | ø 225 | 252 543 |

*Tab. 18: VA spindle guide for packing gland*

| Valve seat set | |
|---|---|
| Includes: valve seat, O-ring (depending on variant), seal | |
| Orifice DN | Order number |
| 15 | 262152 |
| 20 | 262157 |
| 25 | 262170 |
| 32 | 262174 |
| 40 | 262177 |
| 50 | 262179 |
| 65 | 262204 |
| 80 | 262207 |
| 100 | 262210 |

*Fig. 36: Valve seat set*

12) *As of series-production status January 2017, switch also possible for DN50 spindle ø 10.*

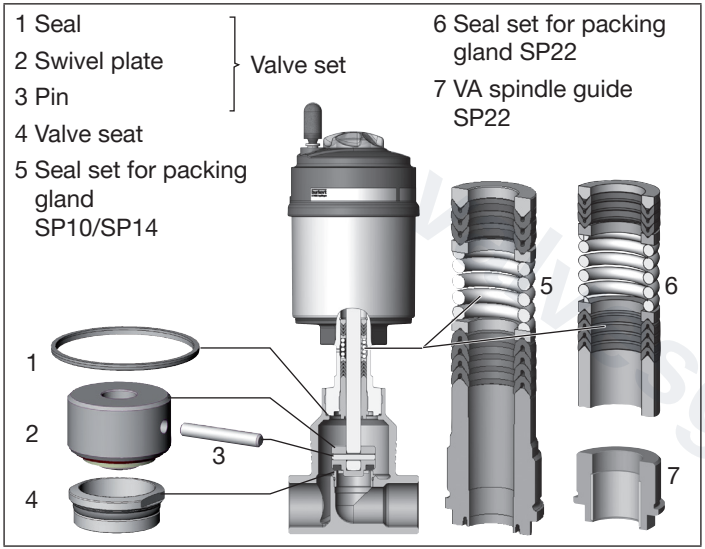


*Fig. 37: Spare parts*

## 12.2 Installation tools

| Assembly key for packing gland (only for dismantling packing gland until January 2013) | | |
|---|---|---|
| **Installation wrench** | **Orifice DN** | **Order number** |
| Spindle ⌀ 10 mm | 15–40 | 665 700 |
| Spindle ⌀ 14 mm | 32–65 | 665 701 |

*Tab. 19: Installation wrench*

| Modified socket wrench for packing gland (series-production status as of January 2013) | | | | |
|---|---|---|---|---|
| 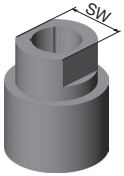  | **Socket wrench** | **DN** | **AF** | **Order number** |
| | Spindle ⌀ 10 mm | 15–50[13] | 19 | 683 221 |
| | Spindle ⌀ 14 mm | 32–65 | 21 | 683 223 |
| 13) *As of series-production status January 2017 also for DN50* | | | | |

*Tab. 20: Modified socket wrench*

| Assembly tools for replacing valve seat | |
|---|---|
| **Orifice DN** | **Order number** |
| 15 | 652 604 |
| 20 | 652 605 |
| 25 | 652 606 |
| 32 | 652 607 |
| 40 | 652 608 |
| 50 | 652 609 |
| 65 | 655 562 |
| 80 | 655 563 |
| 100 | 655 564 |

*Tab. 21: Assembly tool for replacing valve seat*

If you have any questions, please contact your Bürkert sales department.


valvesgo.com

# 13 TRANSPORT, STORAGE, PACKAGING

**CAUTION**

**Risk of injury due to heavy device.**

During transportation or installation work, a heavy device may fall down and cause injuries.

- Heavy equipment must only be transported, assembled and disassembled with the help of a second person.
- Use suitable tools.

**ATTENTION**

**Damage in transit due to inadequately protected devices.**

- Protect the device against moisture and dirt in shock-resistant packaging during transportation.
- Observe permitted storage temperature.

**Incorrect storage may damage the device.**

- Store the device in a dry and dust-free location.
- Storage temperature: –20...+65 °C.

**Environmentally friendly disposal**

- Follow national regulations regarding disposal and the environment.
- Collect electrical and electronic devices separately and dispose of them as special waste.

Further information at country.burkert.com

valvesgo.com

bürkert
FLUID CONTROL SYSTEMS

valvesgo.com

country.burkert.com



valvesgo.com