bürkert
FLUID CONTROL SYSTEMS

Servo-assisted 3/2-way Solenoid Valve for pneumatics

- High flow-rate capacity
- Reduced power consumption
- Single or manifold mounting
- Standard, Ex mb, Ex eb mb and Ex ia variants
- Threaded port G ¼" and NPT ¼"

Product variants described in the data sheet may differ from the product presentation and description.

Can be combined with

Type 2507
Cable plug,
form B according to industry standard

Type 2516
Cable plug,
form C according to DIN EN 175301-803

Type 2518
Cable plug,
form A according to DIN EN 175301-803

Type 2030
2/2-way diaphragm valve with pneumatic plastic actuator (Type CLASSIC)

Type 1087
Timer,
form A according to DIN EN 175301-803

Type description

The Type 6518 is a servo-assisted 3/2-way valve and the Type 6519 is a 3/2, 5/2 or 5/3-way valve. Together, they form a product line. The valves can be used individually or in blocks. The valves work without a continuous air consumption and are used for the pneumatic control of double or single-acting actuators. The use of high quality materials makes it possible to use these valves in the open air and under chemical atmospheres. The product line contains units with Ex-Approvals and NAMUR flange interface. With valve circuit functions C and D, safety level SIL2 can be achieved in accordance with IEC 61508, depending on the architecture of the safety device.

DTS 1000010752 EN Version: - Status: RL (released | freigegeben | valide) printed: 01.10.2026

© Christian Bürkert GmbH & Co. KG, Subject to alteration

valvesgo.com

Table of contents

1. General technical data 4

2. Product variants 5

2.1. Standard variant 5
2.2. Ex mb and Ex eb mb variant 6
2.3. Ex ia variant 7

3. Circuit functions 7

4. Approvals and conformities 8

4.1. General notes 8
4.2. Conformity 8
4.3. Standards 8
4.4. Explosion protection 8
4.5. North America (USA/Canada) 8

5. Materials 9

5.1. Bürkert resistApp 9

6. Dimensions 9

6.1. Pneumatic module Type MP07 9
6.2. Standard variant 3/2-way valve, circuit function C and D 10
With plug form B or C 10
With plug form A 10
6.3. Ex mb/eb mb variant 3/2-way valve, circuit function C and D 11
With moulded cable (3 m long) (Ex mb) 11
With terminal box (Ex eb mb) 11
6.4. Ex ia variant 3/2-way valve, circuit function C 12
6.5. ATEX variant cable coil and terminal box 13

7. Product design and assembly 14

7.1. Block assembly 14

8. Product accessories 15

8.1. Cable glands for ATEX/IECEx terminal box 15
8.2. Special tool to turn the terminal box 15

9. Ordering information 16

9.1. Bürkert eShop 16
9.2. Bürkert configurator 16
9.3. Bürkert product filter 16
9.4. Ordering chart standard variant 17
With plug form A 17
With plug form B 18
With plug form C 18
9.5. Ordering chart Ex mb variant (with moulded cable) 19
9.6. Ordering chart Ex eb mb variant (with terminal box) 19
9.7. Ordering chart Ex ia variant (310 Ohm) 20
9.8. Ordering example Type 6518 with pneumatic module Type MP07 20

DTS 1000010752 EN Version: - Status: RL (released | freigegeben | valide) printed: 01.10.2026

valvesgo.com

valvesgo.com

9.9. Ordering chart accessories 21
Cable plug Type 2513, form A according to DIN EN 175301 - 803 21
Cable plug Type 2518, form A according to DIN EN 175301 - 803 21
Cable plug Type 2507, form B according to industry standard 22
Cable plug Type 2516, form C according to DIN EN 175301 - 803 22
Cable glands for ATEX/IECEx terminal box 23

DTS 1000010752 EN Version: - Status: RL (released | freigegeben | valide) printed: 01.10.2026

valvesgo.com

valvesgo.com

1. General technical data

Product properties	
Dimensions	Further information can be found in chapter "6. Dimensions" on page 9.
Material	
Seal	NBR, PUR
Body	Polyamide, reinforced glass-fibre
Threaded bushing	Brass (stainless steel on request)
Manual override	Standard
Orifice	DN 8...DN 9
Pneumatic module	MP07
Circuit function	C and D Further information can be found in chapter "3. Circuit functions" on page 7.
Thermal insulation class of solenoid coil	Polyamide coil class B Epoxy coil class H
Performance data	
Compressed air quality	ISO 8573-1:2010, class 7.4.4 [2.)]
Duty cycle	100 % continuous operation
Switching time [1.)]	
Opening	Pressure build-up 0...10 %
Closing	Pressure reduction 100...90 %
Medium data	
Operating medium	Neutral medium (e.g. lubricated or oil-free compressed dry air)
Product connections	
Electrical connection	• Plug contacts according to DIN EN 175301 - 803 form A for cable plug **Type 2518** ▸ Further information can be found in chapter "Cable plug Type 2518, form A according to DIN EN 175301 - 803" on page 21. • Plug contacts according to DIN EN 175301 - 803 form B for cable plug **Type 2507** ▸ Further information can be found in chapter "Cable plug Type 2507, form B according to industry standard" on page 22. • Plug contacts according to DIN EN 175301 - 803 form C for cable plug **Type 2516** ▸ Further information can be found in chapter "Cable plug Type 2516, form C according to DIN EN 175301 - 803" on page 22. • Plug contacts according to DIN EN 175301 - 803 form A for cable plug **Type 2513** ▸ Further information can be found in chapter "Cable plug Type 2513, form A according to DIN EN 175301 - 803" on page 21.
Pneumatic connection	
Supply connection 1, 3, 5	Threaded G ¼, NPT ¼
Working port 2, 4	Threaded G ¼, NPT ¼
Auxiliary pilot air port	M5
Approvals and conformities	
Degree of protection	IP65 with cable plug
Explosion protection	Further information can be found in chapter "4.4. Explosion protection" on page 8.
North America (USA/Canada)	Further information can be found in chapter "4.5. North America (USA/Canada)" on page 8.
Environment and installation	
Installation position	As required, preferably with actuator upright

1.) Measurement at + 20 °C, 6 bar at valve outlet
2.) To prevent freezing of the expanded compressed air, the pressure dew point must be at least 10 K lower than the temperature of the medium.

DTS 1000010752 EN Version: - Status: RL (released | freigegeben | valide) printed: 01.10.2026

valvesgo.com

2. Product variants

2.1. Standard variant

Note:
For general technical data, see "1. General technical data" on page 4.

Type 6518 is a pilot operated 3/2-way valve (normally closed or open). The valve width of 32 mm allows high flow rates. The valves can be used individually or in blocks.

Product properties	Coil size 24.5 mm	Coil size 32 mm
Weight	212 g	384 g
Switching time		
Opening	20 ms	20 ms
Closing	40 ms	40 ms
Electrical data		
Operating voltage	24 V DC	24 V DC 24/110/230 V 50/60 Hz
Power consumption		
Inrush	–	AC: 11 VA AC: 6/2 VA/W
Hold	DC: 1.7 W	DC: 2 W
Medium data		
Medium temperature	- 10 °C...+ 55 °C	- 10 °C...+ 55 °C
Product connections		
Electrical connection	• Plug contacts according to DIN EN 175301 - 803 form B for cable plug **Type 2507** ▸ Further information can be found in chapter "Cable plug Type 2507, form B according to industry standard" on page 22. • Plug contacts according to DIN EN 175301 - 803 form C for cable plug **Type 2516** ▸ Further information can be found in chapter "Cable plug Type 2516, form C according to DIN EN 175301 - 803" on page 22.	• Plug contacts according to DIN EN 175301 - 803 form A for cable plug **Type 2518** ▸ Further information can be found in chapter "Cable plug Type 2518, form A according to DIN EN 175301 - 803" on page 21.
Environment and installation		
Ambient temperature	- 25 °C...+ 55 °C	- 25 °C...+ 55 °C

DTS 1000010752 EN Version: - Status: RL (released | freigegeben | valide) printed: 01.10.2026

valvesgo.com

2.2. Ex mb and Ex eb mb variant

Note:

- Ex mb (with moulded cable) or Ex eb mb (with terminal box)
- The maximum medium temperature must never exceed the permitted temperature class (T4: + 135 °C, T5: + 100 °C, T6: + 85 °C) minus 5 K.

Ex mb approval is achieved by fitting the valve with a corresponding push-over coil. The cable connection and the cable are permanently moulded to the coil. The valves can be used individually or on blocks.

Product properties		
Weight	600 g	
Switching time		
Opening	20 ms	
Closing	50 ms	
Electrical data		
Operating voltage	24/110/230 V UC	
Voltage tolerance	± 10 %	
Medium data		
Medium temperature	- 10 °C...+ 55 °C	
Product connections		
Electrical connection	3 m cable, moulded Terminal box (without fuse)	
Approvals and conformities		
Explosion protection	**ATEX**	**IECEx**
Coil with cable	EPS 18 ATEX 1 232 X II 2G Ex mb IIC T* Gb II 2D Ex mb IIIC T*** °C Db	IECEx EPS 18.0110X Ex mb IIC T* Gb Ex mb IIIC T*** °C Db
Coil with terminal box	EPS 18 ATEX 1 232 X II 2G Ex eb mb IIC T* Gb II 2D Ex mb tb IIIC T*** °C Db	IECEx EPS 18.0110X Ex eb mb IIC T* Gb Ex mb tb IIIC T*** °C Db
Environment and installation		
Ambient temperature	- 25 °C...+ 50 °C	

T* = temperature classes T4, T5 or T6

DTS 1000010752 EN Version: - Status: RL (released | freigegeben | valide) printed: 01.10.2026

valvesgo.com

2.3. Ex ia variant

Note:

- The maximum medium temperature must never exceed the permitted temperature class (T4: + 135 °C, T5: + 100 °C, T6: + 85 °C) minus 5 K.
- The units may only be used in potentially explosive atmospheres in the manner approved by the admission board, i.e. the permissible maximum electrical values must be observed.
- The valves is intended for operation at 24 V DC outputs via the intermediate switching of a corresponding intrinsically safe operating resource (isolating module or barrier).

The intrinsically-safe Type 6518 Ex ia valve consist of an intrinsically-safe pilot control and a pneumatic amplifier. The diaphragm-controlled valve seats work with very low friction, ensuring reliable switching of the valve, even after long shut-down periods.

Product properties		
Weight	580 g	
Switching time		
Opening	75 ms	
Closing	115 ms	
Electrical data		
Function values for switching function valve	**At + 20 °C**	**At + 55 °C**
Minimum switching current	29 mA	29 mA
Nominal resistance coil	310 Ω	360 Ω
Minimum terminal voltage	9.0 V	10.4 V
Conformity specifications		
Ui	35 V	
Ii	0.9 A	
Pi	1.1 W	
Medium data		
Medium temperature	- 10 °C...+ 55 °C	
Product connections		
Electrical connection	Cable plug Type 2518, form A acc. to DIN EN 175301 - 803. Further information can be found in chapter **"Cable plug Type 2518, form A according to DIN EN 175301 - 803" on page 21**.	
Approvals and conformities		
Explosion protection	**ATEX**	**IECEx**
	EPS 18 ATEX 1 088 X II 2G Ex ia IIC T6/T4 Gb II 2D Ex ia IIIC T135 °C Db	IECEx EPS 18.0038X Ex ia IIC T6/T4 Gb Ex ia IIIC T135 °C Db
Environment and installation		
Ambient temperature	- 25 °C...+ 55 °C	

valvesgo.com

DTS 1000010752 EN Version: - Status: RL (released | freigegeben | valide) printed: 01.10.2026

3. Circuit functions

Symbol	Description
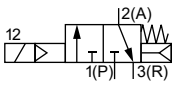	**Circuit function C (CF C)** 3/2-way solenoid valve Servo-controlled Normally closed
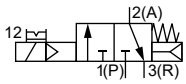	**Circuit function C (CF C)** 3/2-way solenoid valve Servo-controlled, with manual override Normally closed
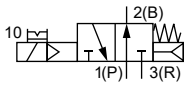	**Circuit function D (CF D)** 3/2-way solenoid valve Servo-controlled, with manual override Normally open

valvesgo.com

4. Approvals and conformities

4.1. General notes

- The approvals and conformities listed below must be stated when making enquiries. This is the only way to ensure that the product complies with all required specifications.
- Not all available variants can be supplied with the below mentioned approvals or conformities.

4.2. Conformity

In accordance with the Declaration of Conformity, the product is compliant with the EU Directives.

4.3. Standards

The applied standards which are used to demonstrate compliance with the EU Directives are listed in the EU-Type Examination Certificate and/or the EU Declaration of Conformity.

4.4. Explosion protection

Approval	Description
	Optional: Explosion protection Refer to the corresponding sub-chapter in chapter "2. Product variants" on page 5 for more information.

4.5. North America (USA/Canada)

Approval	Description
	Optional: UL Listed for the USA and Canada The products are UL Listed for the USA and Canada according to: • UL 429 (electrically operated valves) • CAN/CSA-C22.2 No. 139 - 19
	Optional (valid for coils): UL Hazardous Locations – Explosion Protection UL Listed for Hazardous Locations for USA and Canada Class I, Zone 1 Class I, Division 2, Group A, B, C and D Class II + III, Division 2, Group F and G
	Optional: UL Recognized for the USA and Canada The products are UL Recognized for the USA and Canada according to: • UL 429 (electrically operated valves) • CAN/CSA-C22.2 No. 139 - 19
	Optional (valid for coils): FM (Factory Mutual) – Explosion Protection FM for Hazardous Locations for USA and Canada Class I, Zone 1 Class I, Division 1, Groups A, B, C and D Class II + III, Division 1, Groups E, F and G

DTS 1000010752 EN Version: - Status: RL (released | freigegeben | valide) printed: 01.10.2026

valvesgo.com

valvesgo.com

5. Materials

5.1. Bürkert resistApp

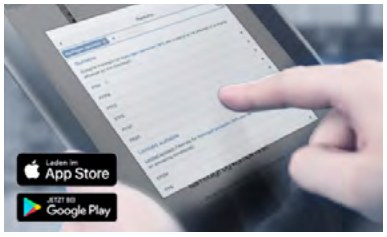

Bürkert resistApp – Chemical resistance chart

You want to ensure the reliability and durability of the materials in your individual application case? Verify your combination of media and materials on our website or in our resistApp.

Start chemical resistance check

6. Dimensions

6.1. Pneumatic module Type MP07

Note:

- Dimensions in mm
- n = no. of valves, maximum 12
- Block mounting on wall or with DIN rail 50022 or 50023
- Valve mounting on the pneumatic modules Type MP07 by means of included M4 screws

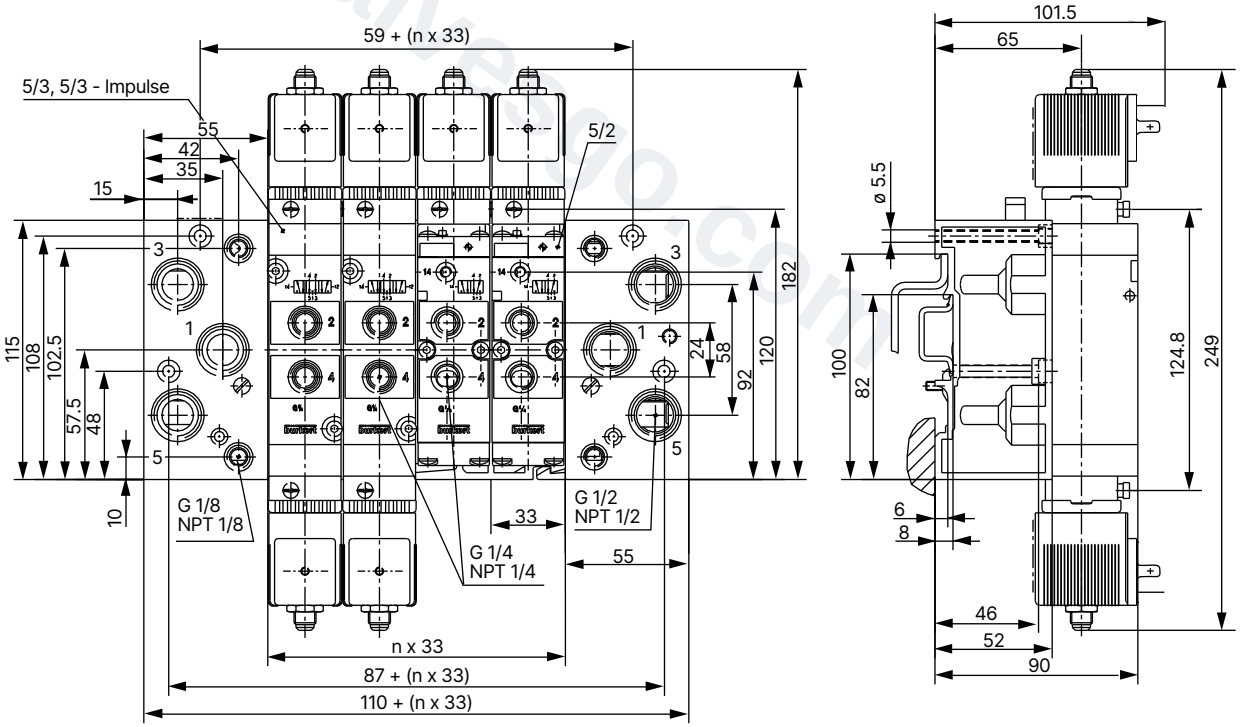

DTS 1000010752 EN Version: - Status: RL (released | freigegeben | valide) printed: 01.10.2026

valvesgo.com

6.2. Standard variant 3/2-way valve, circuit function C and D

With plug form B or C

Note:
Dimensions in mm

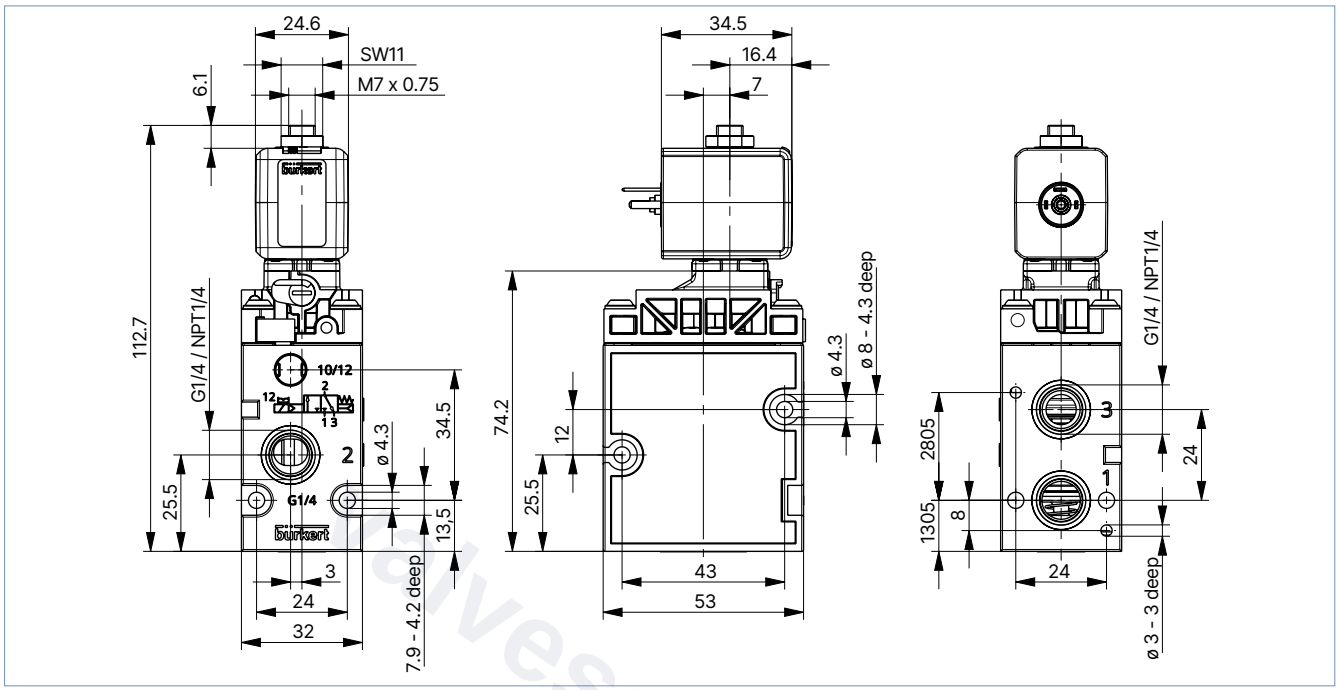

With plug form A

Note:
Dimensions in mm

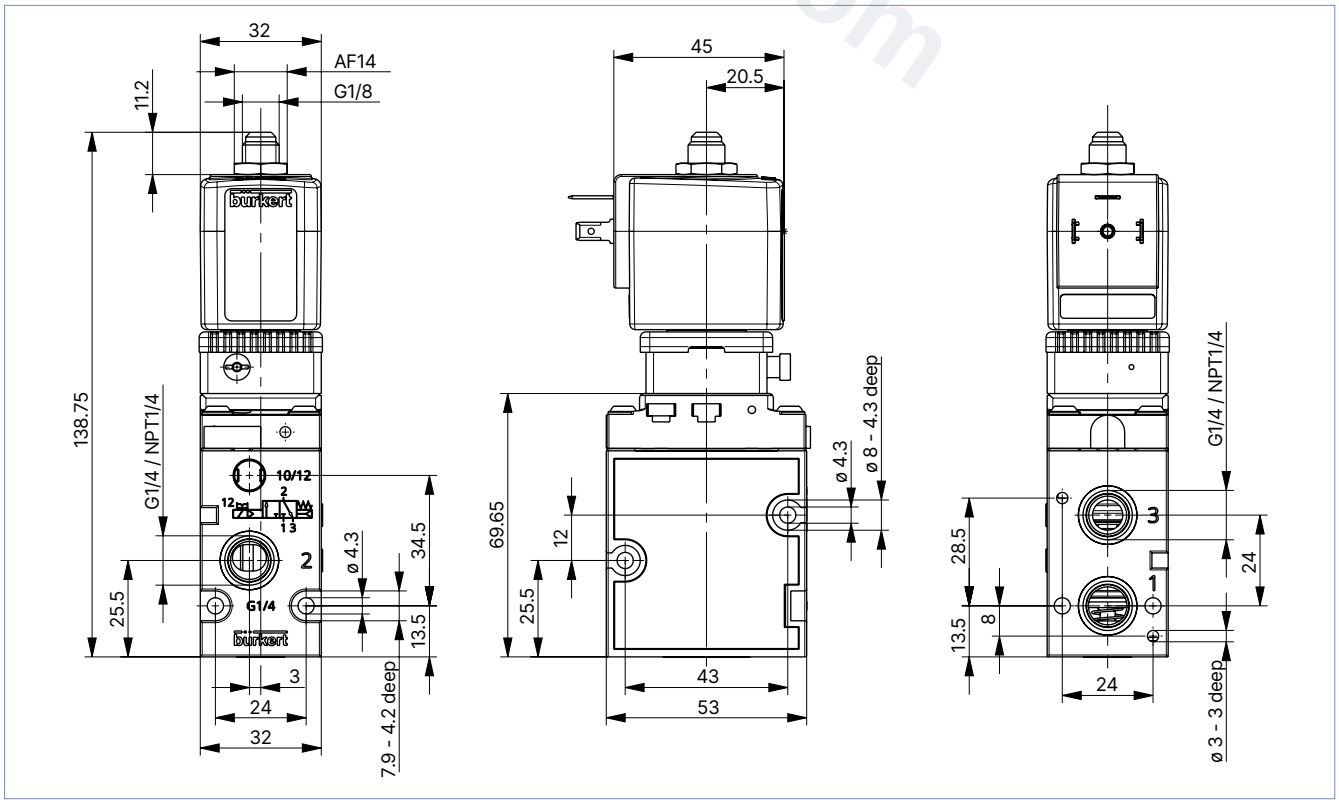

DTS 1000010752 EN Version: - Status: RL (released | freigegeben | valide) printed: 01.10.2026

valvesgo.com

6.3. Ex mb/eb mb variant 3/2-way valve, circuit function C and D

With moulded cable (3 m long) (Ex mb)

Note:
Dimensions in mm

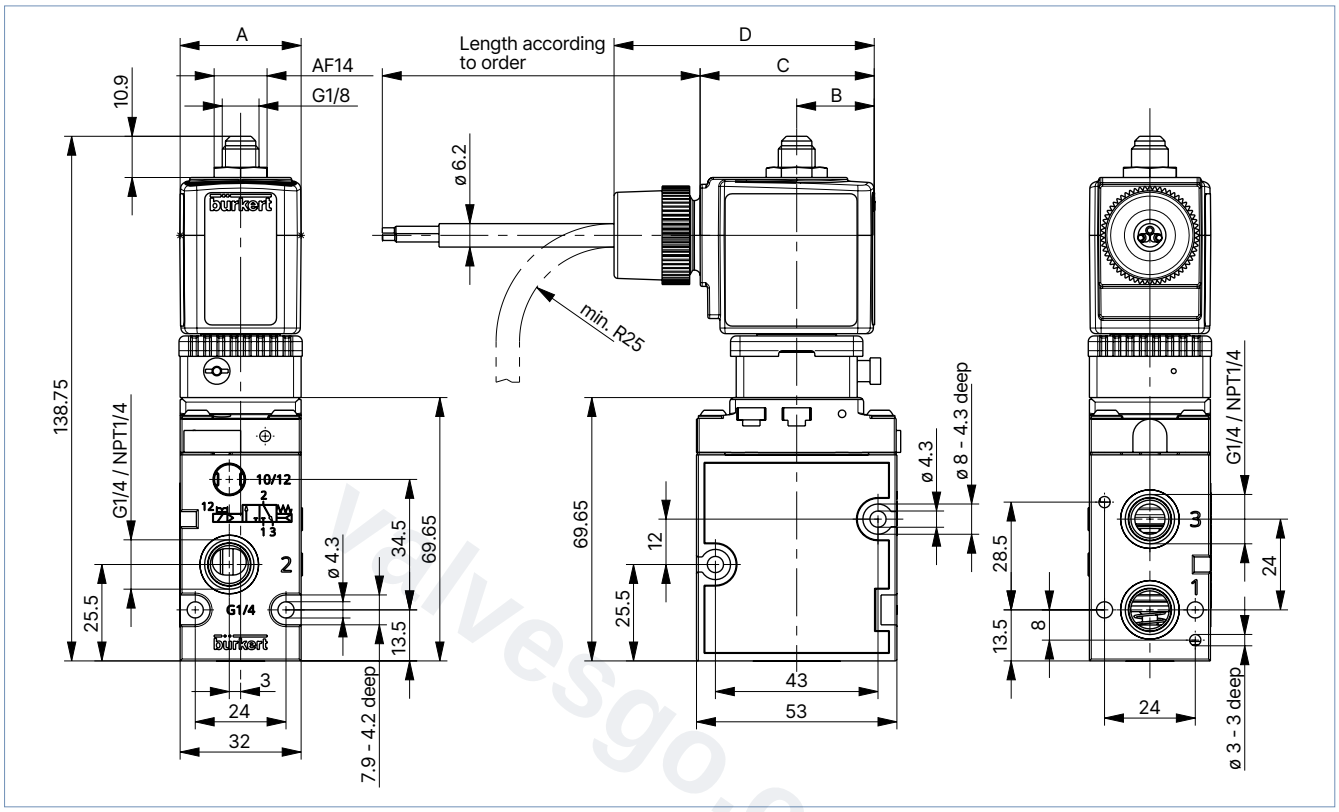

With terminal box (Ex eb mb)

Note:

- The dimensions of the housing are identical to the variant with molded cable.
- For the coil dimensions, see chapter "6.5. ATEX variant cable coil and terminal box" on page 13.

DTS 1000010752 EN Version: - Status: RL (released | freigegeben | valide) printed: 01.10.2026

valvesgo.com

6.4. Ex ia variant 3/2-way valve, circuit function C

Note:
Dimensions in mm

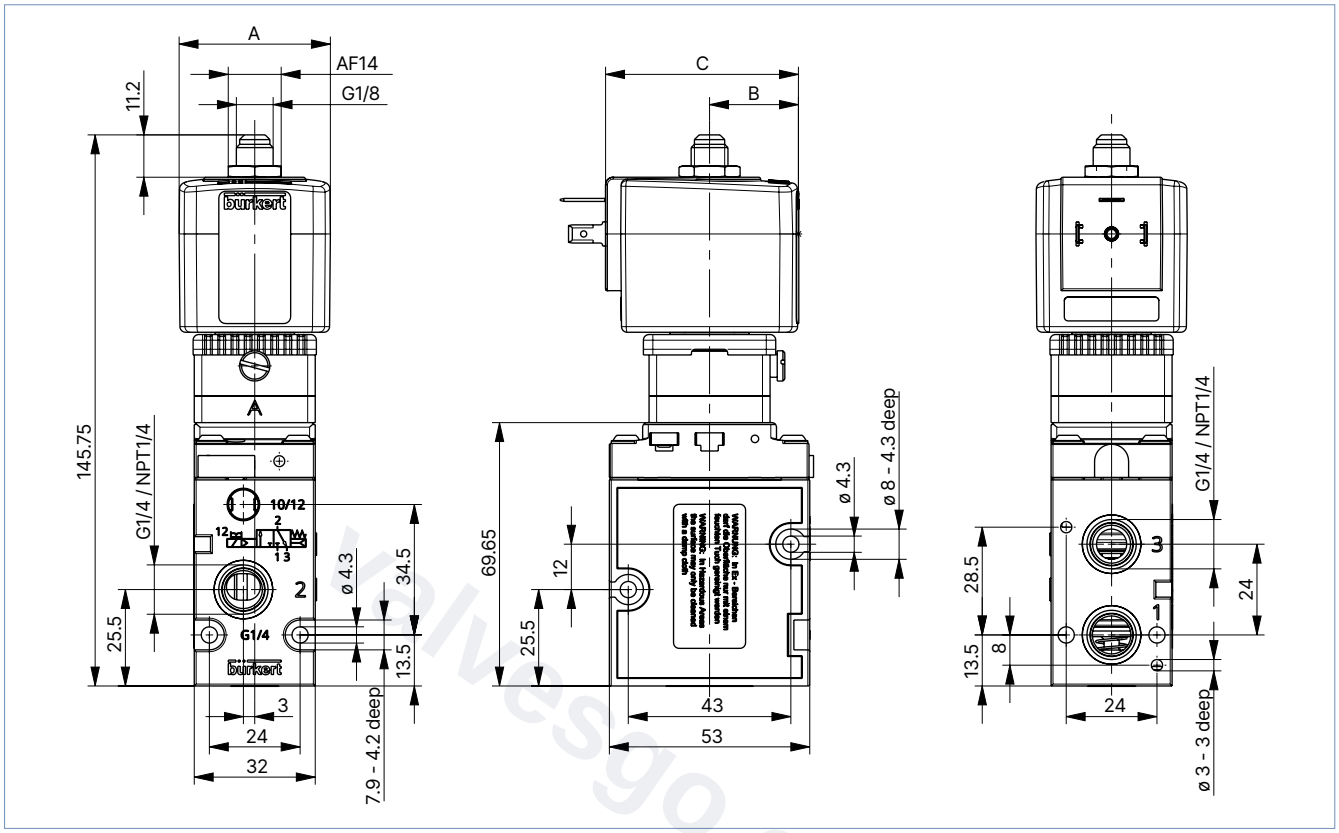

DTS 1000010752 EN Version: - Status: RL (released | freigegeben | valide) printed: 01.10.2026

valvesgo.com

6.5. ATEX variant cable coil and terminal box

Note:
Dimensions in mm

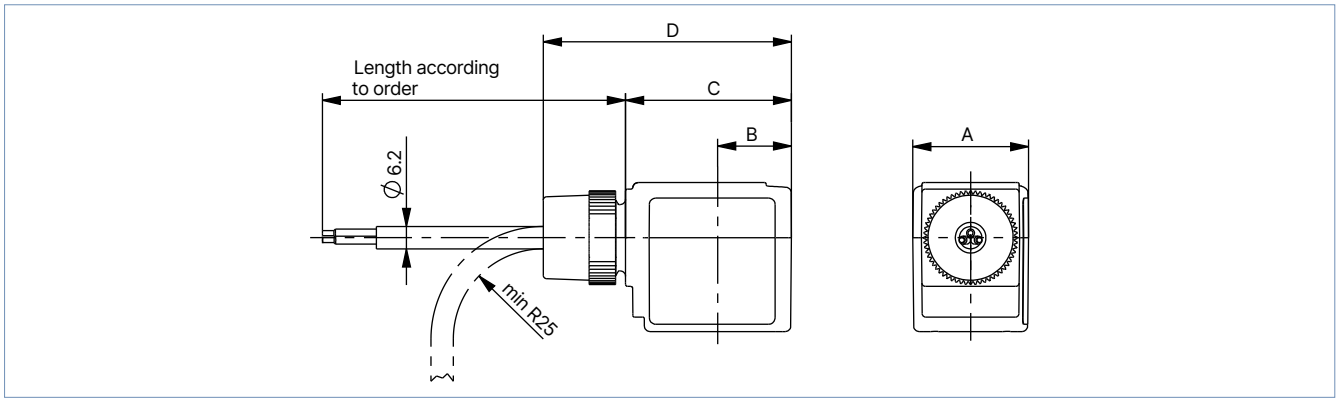

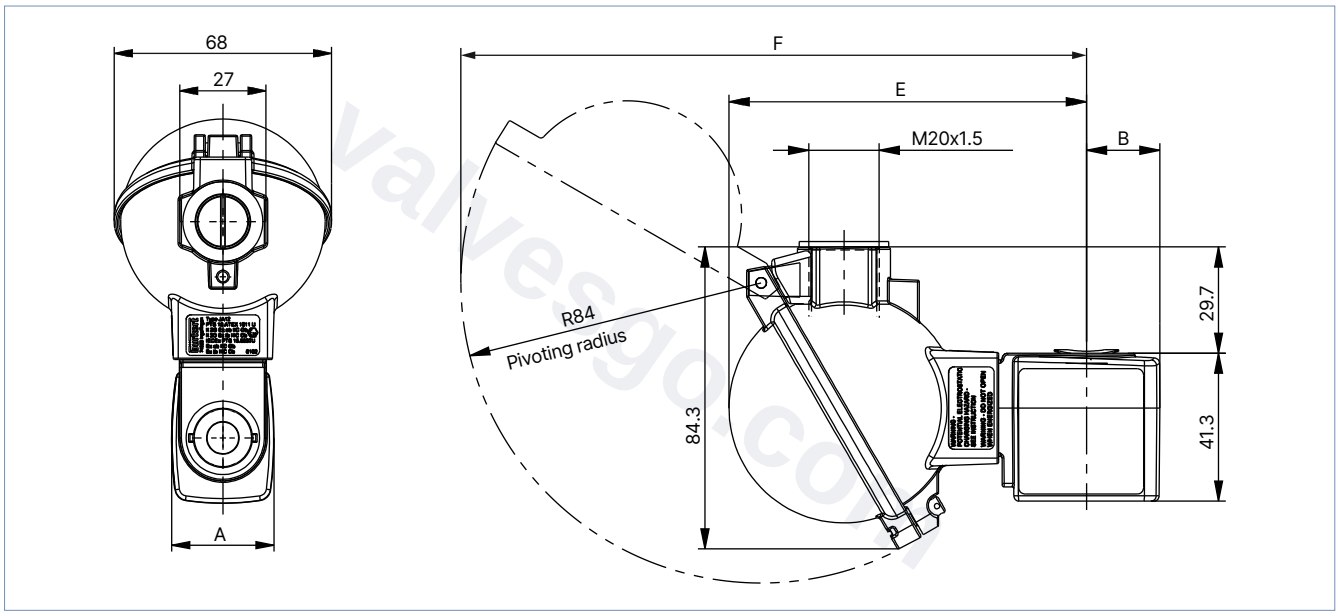

Coil size	A	B	C	D	E	F
	[mm]	[mm]	[mm]	[mm]	[mm]	[mm]
5	32	20.5	46	66.8	99.8	174.7
6	40	23.5	52	74.8	102.8	177.7

DTS 1000010752 EN Version: - Status: RL (released | freigegeben | valide) printed: 01.10.2026

valvesgo.com

7. Product design and assembly

7.1. Block assembly

Note:
Single modules or pre-assembled blocks can be ordered.

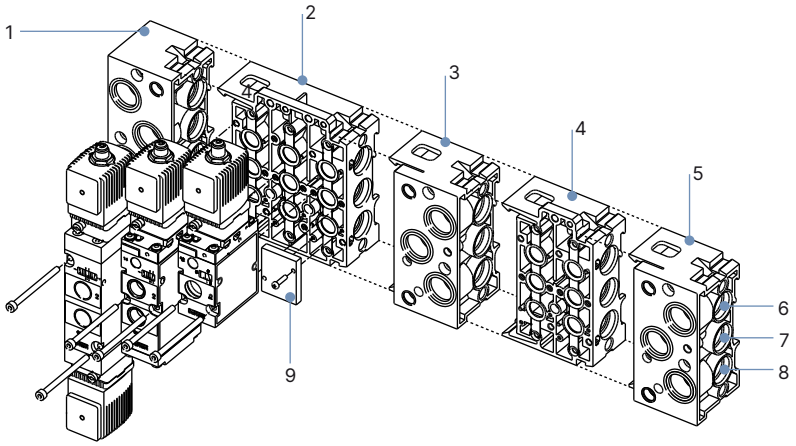

No.	Element
1	Connection module left
2	Base module 3-fold
3	Intermediate module: supply connections pierced for additional pressure supply or Connection module right: supply connections closed, thus enabling multiple operating pressures in a single block
4	Base module 2-fold
5	Connection module right
6	Supply connection: 3(R)
7	Supply connection: 1(P)
8	Supply connection: 5(S)
9	Cover plate for 3/2-way valve (to cover unused connections)

valvesgo.com

DTS 1000010752 EN Version: - Status: RL (released | freigegeben | valide) printed: 01.10.2026

valvesgo.com

8. Product accessories

8.1. Cable glands for ATEX/IECEx terminal box

Note:
A polyamide cable gland is included in the scope of delivery. A nickel-plated brass variant can be ordered for a surcharge, see **"Cable glands for ATEX/IECEx terminal box" on page 23**.

Description	Ex approval		Dimensions	
	Certification	Identification		
Ex cable gland, nickel-plated brass, 6...13 mm 	PTB 04 ATEX 1112 X, IECEx PTB 13.0027X	II 2 G Ex e IIC Gb, II 2 D Ex tb IIIC Db IP68	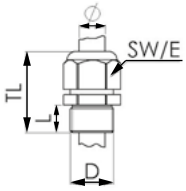	TL 29...37 mm L 6 mm D 20 mm SW 24 mm E 27 mm
Ex cable gland, polyamide, 7...13 mm 	PTB 13 ATEX 1015 X, IECEx PTB 13.0034X	II 2 G Ex e IIC Gb, II 2 D Ex tb IIIC Db IP68	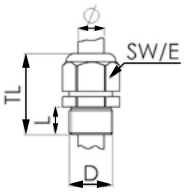	TL 36...45 mm L 10 mm D 20 mm SW 24 mm E 28 mm

8.2. Special tool to turn the terminal box

Note:
This special tool is not included in the scope of delivery of the valve, see **"Cable glands for ATEX/IECEx terminal box" on page 23**.

Description	Components of the set
Set SC02-AC10 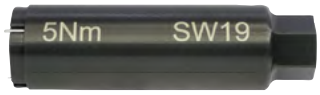	• Special tool • Service manual

DTS 1000010752 EN Version: - Status: RL (released | freigegeben | valide) printed: 01.10.2026

valvesgo.com

valvesgo.com

9. Ordering information

9.1. Bürkert eShop

Bürkert eShop – Easy ordering and quick delivery

You want to find your desired Bürkert product or spare part quickly and order directly? Our online shop is available for you 24/7. Sign up and enjoy all the benefits.

Order online now

9.2. Bürkert configurator

Bürkert configurator – Configuring products easily

You want to put together a product that is precisely tailored to your needs in just a few guided steps? Configure selected Bürkert products with our online configurator.

Configure product

9.3. Bürkert product filter

Bürkert product filter – Get quickly to the right product

You want to select products comfortably based on your technical requirements?
Use the Bürkert product filter and find suitable articles for your application quickly and easily.

Try out our product filter

DTS 1000010752 EN Version: - Status: RL (released | freigegeben | valide) printed: 01.10.2026

valvesgo.com

9.4. Ordering chart standard variant

With plug form A

Note:

- Please note that the cable plug must be ordered separately.
- See "Cable plug Type 2513, form A according to DIN EN 175301-803" on page 21 or separate data sheet for **Type 2513** ▶.
- See "Cable plug Type 2518, form A according to DIN EN 175301-803" on page 21 or separate data sheet for **Type 2518** ▶.
- Other variants without manual override are available on request.

Circuit function	Orifice	Q_{Nn} value air 1.)	Voltage/ Frequency	Nominal power	Pressure range 2.)	Seal material Body	Electrical connection	Article no.	
	[mm]	[l/min]	[V/Hz]	[W]	[bar]			G ¼	NPT ¼
CF C 3/2-way solenoid valve Servo-controlled, with manual override Normally closed 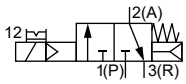	8.0	1300	24 DC	2	2...10	NBR and PUR (Polyamide)	Form A	132457	132725
			24 / 50/60					132458	o. r.
			110 / 50/60					132459	o. r.
			230 / 50/60					132460	o. r.
CF D 3/2-way solenoid valve Servo-controlled, with manual override Normally open 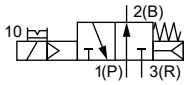	8.0	1300	24 DC	2	2...10	NBR and PUR (Polyamide)	Form A	132461	o. r.
			24 / 50/60					132462	o. r.
			110 / 50/60					132463	o. r.
			230 / 50/60					132464	o. r.

o. r. = on request

1.) Measurement at + 20 °C, 6 bar at valve inlet and 1 bar differential pressure

2.) Pressure data: overpressure to atmospheric pressure

DTS 1000010752 EN Version: - Status: RL (released | freigegeben | valide) printed: 01.10.2026

valvesgo.com

valvesgo.com

With plug form B

Note:

- Please note that the cable plug must be ordered separately, see "Cable plug Type 2507, form B according to industry standard" on page 22 or separate data sheet for **Type 2507** ▶.
- Other variants without manual override are available on request.

Circuit function	Orifice	Q_{Nn} value air 1.)	Voltage/ Frequency	Nominal power	Pressure range 2.)	Seal material Body	Electrical connection	Article no.	
	[mm]	[l/min]	[V/Hz]	[W]	[bar]			G ¼	NPT ¼
CF C 3/2-way solenoid valve Servo-controlled, with manual override Normally closed 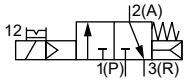	8.0	1300	24 DC	1.7	2...10	NBR and PUR (Polyamide)	Form B	20053701 🛒	20053702 🛒
			24 / 50					o. r.	o. r.
			024 / 60					o. r.	o. r.
			110 / 50					o. r.	o. r.
			120 / 60					o. r.	o. r.
			230 / 50					o. r.	o. r.
			240 / 60					o. r.	o. r.
CF D 3/2-way solenoid valve Servo-controlled, with manual override Normally open 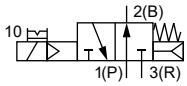	8.0	1300	24 DC	1.7	2...10	NBR and PUR (Polyamide)	Form B	o. r.	o. r.
			24 / 50					o. r.	o. r.
			024 / 60					o. r.	o. r.
			110 / 50					o. r.	o. r.
			120 / 60					o. r.	o. r.
			230 / 50					o. r.	o. r.
			240 / 60					o. r.	o. r.

o. r. = on request
1.) Measurement at + 20 °C, 6 bar at valve inlet and 1 bar differential pressure
2.) Pressure data: overpressure to atmospheric pressure

With plug form C

Note:

- Please note that the cable plug must be ordered separately, see "Cable plug Type 2516, form C according to DIN EN 175301 - 803" on page 22 or separate data sheet for **Type 2516** ▶.
- Other variants without manual override are available on request.

Circuit function	Orifice	Q_{Nn} value air 1.)	Voltage/ Frequency	Nominal power	Pressure range 2.)	Seal material Body	Electrical connection	Article no.	
	[mm]	[l/min]	[V/Hz]	[W]	[bar]			G ¼	NPT ¼
CF C 3/2-way solenoid valve Servo-controlled, with manual override Normally closed 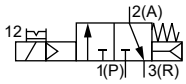	8.0	1300	24 DC	1.7	2...10	NBR and PUR (Polyamide)	Form C	20053699 🛒	20053700 🛒
			24 / 50					o. r.	o. r.
			024 / 60					o. r.	o. r.
			110 / 50					o. r.	o. r.
			120 / 60					o. r.	o. r.
			230 / 50					o. r.	o. r.
			240 / 60					o. r.	o. r.
CF D 3/2-way solenoid valve Servo-controlled, with manual override Normally open 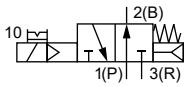	8.0	1300	24 DC	1.7	2...10	NBR and PUR (Polyamide)	Form C	o. r.	o. r.
			24 / 50					o. r.	o. r.
			024 / 60					o. r.	o. r.
			110 / 50					o. r.	o. r.
			120 / 60					o. r.	o. r.
			230 / 50					o. r.	o. r.
			240 / 60					o. r.	o. r.

o. r. = on request
1.) Measurement at + 20 °C, 6 bar at valve inlet and 1 bar differential pressure
2.) Pressure data: overpressure to atmospheric pressure

DTS 1000010752 EN Version: - Status: RL (released | freigegeben | valide) printed: 01.10.2026

valvesgo.com

9.5. Ordering chart Ex mb variant (with moulded cable)

Note:

- The article numbers listed are designed for temperature class T5. Other temperature classes are available on request.
- Other variants without manual override are available on request.

Circuit function	Orifice	Q_{Nn} value air [1.)]	Voltage/ Frequency	Nominal power	Pressure range [2.)]	Seal material Body	Article no.	
	[mm]	[l/min]	[V/Hz]	[W]	[bar]		G ¼	NPT ¼
CF C 3/2-way solenoid valve Servo-controlled, with manual override Normally closed 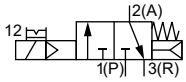	8.0	1300	24 UC	3	2...10	NBR and PUR (Polyamide)	350443	o. r.
			110 UC				350449	o. r.
			230 UC				350451	o. r.
CF D 3/2-way solenoid valve Servo-controlled, with manual override Normally open 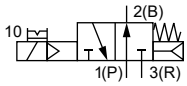	8.0	1300	24 UC	3	2...10	NBR and PUR (Polyamide)	350452	o. r.
			110 UC				o. r.	o. r.
			230 UC				o. r.	o. r.

o. r. = on request
1.) Measurement at + 20 °C, 6 bar at valve inlet and 1 bar differential pressure
2.) Pressure data: overpressure to atmospheric pressure

9.6. Ordering chart Ex eb mb variant (with terminal box)

Note:

- The article numbers listed are designed for temperature class T5. Other temperature classes are available on request.
- Other variants without manual override are available on request.

Circuit function	Orifice	Q_{Nn} value air [1.)]	Voltage/ Frequency	Nominal power	Pressure range [2.)]	Seal material Body	Article no.	
	[mm]	[l/min]	[V/Hz]	[W]	[bar]		G ¼	NPT ¼
CF C 3/2-way solenoid valve Servo-controlled, with manual override Normally closed 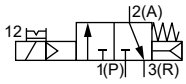	8.0	1300	24 UC	3	2...10	NBR and PUR (Polyamide)	350446	o. r.
			110 UC				350450	o. r.
			230 UC				368752	o. r.
CF D 3/2-way solenoid valve Servo-controlled, with manual override Normally open 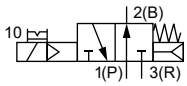	8.0	1300	24 UC	3	2...10	NBR and PUR (Polyamide)	o. r.	o. r.
			110 UC				20009771	o. r.
			230 UC				20015790	o. r.

o. r. = on request
1.) Measurement at + 20 °C, 6 bar at valve inlet and 1 bar differential pressure
2.) Pressure data: overpressure to atmospheric pressure

DTS 1000010752 EN Version: - Status: RL (released | freigegeben | valide) printed: 01.10.2026

valvesgo.com

9.7. Ordering chart Ex ia variant (310 Ohm)

Note:

- The article numbers listed are designed for temperature class T6. Other temperature classes are available on request.
- Please note that the cable plug must be ordered separately, see **"Cable plug Type 2518, form A according to DIN EN 175301 - 803" on page 21** or separate data sheet for **Type 2518** ▶.
- Other variants with manual override are available on request.
- Other variants with 481 Ohm are available on request.

Circuit function	Orifice	Q_{Nn} value air 1.)	Pressure range 2.)	Body material pilot valve	Seal material Body	Material threaded bushing	Article no.	
	[mm]	[l/min]	[bar]				G ¼	NPT ¼
CF C 3/2-way solenoid valve Servo-controlled Normally closed 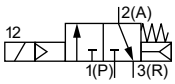	8.0	1300	2...10	Stainless steel 1.4305	NBR and PUR (Polyamide)	Stainless steel	20000908	20000931
						Nickel-plated Brass	20000913	o. r.

o. r. = on request
1.) Measurement at + 20 °C, 6 bar at valve inlet and 1 bar differential pressure
2.) Pressure data: overpressure to atmospheric pressure

9.8. Ordering example Type 6518 with pneumatic module Type MP07

Note:
Valves with Ex ia coil or Ex variants with terminal boxes are not suitable for the block assembly.

Unit	Variant	Article no.
1	Connection module right, G ½	635331
1	Base module 2-fold universal (for 3/2-, 5/2- and 5/3-way)	635319
1	Base module 3-fold universal (for 3/2-, 5/2- and 5/3-way)	635343
1	Connection module left, G ½	635324
5	Valves Type 6518	132475

Variant	Article no.
Connection module right, G ½	635331
Intermediate module	637505
Base module 2-fold universal (for 3/2-, 5/2- and 5/3-way)	635319
Base module 3-fold universal (for 3/2-, 5/2- and 5/3-way)	635343
Connection module left, G ½	635324
Cover plate for 5/2-way and 5/3-way (to cover unused valve positions)	635335
Cover plate for 3/2-way (to cover unused connections)	635337

DTS 1000010752 EN Version: - Status: RL (released | freigegeben | valide) printed: 01.10.2026

valvesgo.com

9.9. Ordering chart accessories

Cable plug Type 2513, form A according to DIN EN 175301 - 803

Note:

- The cable plug Type 2513 meets the requirements of ATEX Cat. 3 GD in assembly with a Bürkert solenoid valve.
- Refer to data sheet **Type 2513** ▶ for more information about the cable plug.

Cable plug	Circuit diagram	Cable length [mm]	Article no.
	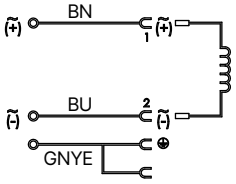	12000	260893
		5000	260892
		3000	260891
		300	260890

Cable plug Type 2518, form A according to DIN EN 175301 - 803

Note:

- Dimensions in mm
- For further variants see data sheet **Type 2518** ▶.

Cable plug	Dimensions	Variant	Voltage	Article no.
	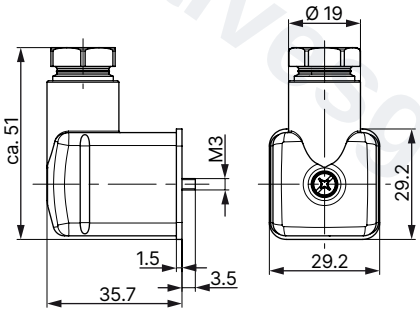	Without wiring (AC/DC)	0...250 V AC/DC	314802
		With LED (AC/DC)	12...24 V AC/DC	314812
		With LED and varistor (AC/DC)	12...24 V AC/DC	314820
		With rectifier, LED and varistor	12...24 V AC/DC	314816
		Without wiring (AC/DC) with silicone seal for higher ambient temperature, e.g. steam variant (NA07)	0...250 V AC/DC	361687

DTS 1000010752 EN Version: - Status: RL (released | freigegeben | valide) printed: 01.10.2026

valvesgo.com

Cable plug Type 2507, form B according to industry standard

Note:

- Dimensions in mm
- The delivery of cable plug includes a flat seal and a fastening screw.
- Refer to data sheet **Type 2507** ▶ for more information about the cable plug.

Cable plug	Dimensions	Variant	Voltage	Article no.
	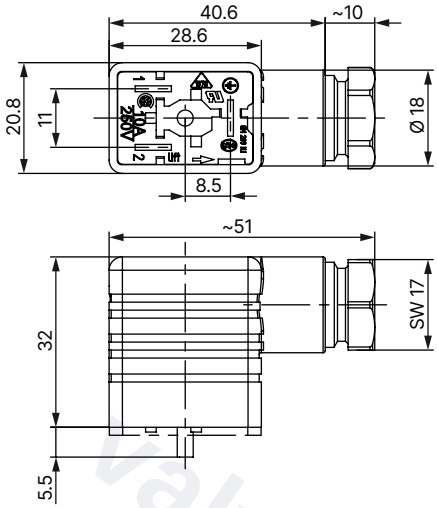	Without wiring (standard)	2...250 V AC/DC	423845
		With LED	24 V AC/DC	423849
		With LED and free-wheeling diode	12...24 V AC/DC	423851
		With rectifier, LED and varistor	12...24 V AC/DC	423853
			2...250 V AC/DC	423854

Cable plug Type 2516, form C according to DIN EN 175301 - 803

Note:

- Dimensions in mm
- The delivery of cable plug includes a flat seal and a fastening screw.
- For further variants see data sheet **Type 2516** ▶.

Cable plug	Dimensions	Variant	Voltage	Article no.
	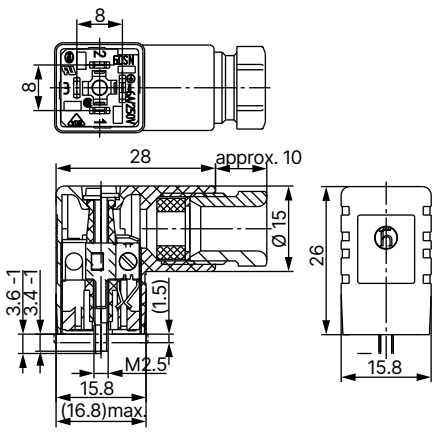	Without wiring	0...250 V AC/DC	303141
		With LED	12...24 V AC/DC	303145
		With LED and varistor	12...24 V AC/DC	303148
		With rectifier, LED and varistor	12...24 V AC/DC	303142

DTS 1000010752 EN Version: - Status: RL (released | freigegeben | valide) printed: 01.10.2026

valvesgo.com

Cable glands for ATEX/IECEx terminal box

Note:

- A polyamide cable gland is included in the scope of delivery. A nickel-plated brass variant can be ordered for a surcharge.
- Refer to **"8.1. Cable glands for ATEX/IECEx terminal box" on page 15** for more information about Ex cable glands.
- Refer to **"8.2. Special tool to turn the terminal box" on page 15** for more information about special tool.

Description	Article no.
Ex cable gland, nickel-plated brass, 6...13 mm [1.)]	773278
Ex cable gland, polyamide, 7...13 mm [1.)]	773277
Set SC02-AC10: special tool [2.)] incl. service manual	293488

1.) Cable diameter
2.) Not included in the scope of delivery of the valve

DTS 1000010752 EN Version: - Status: RL (released | freigegeben | valide) printed: 01.10.2026

valvesgo.com

valvesgo.com