bürkert
FLUID CONTROL SYSTEMS

Type 6518, 6519

3/2, 5/2 or 5/3 way solenoid valve
3/2-, 5/2- bzw. 5/3-Wege-Magnetventil
Électrovanne 3/2, 5/2 ou 5/3 voies

valvesgo.com

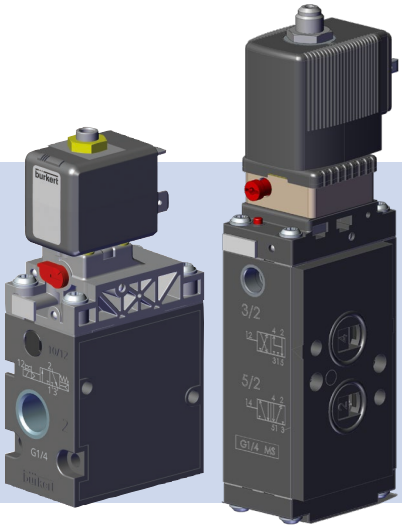

Operating Instructions

Bedienungsanleitung
Manuel d‘utilisation

MAN 1000597567 EN Version: BStatus: RL (released | freigegeben) printed: 13.10.2026

valvesgo.com

valvesgo.com

We reserve the right to make technical changes without notice.
Technische Änderungen vorbehalten.
Sous réserve de modifications techniques.

© Bürkert Werke GmbH & Co. KG, 2017-2025

Operating Instructions 2504/02_EU-ML_00815463 / Original DE

valvesgo.com

1 OPERATING INSTRUCTIONS 4
1.1 Symbols 4
1.2 Definition of terms 4
2 INTENDED USE 5
3 BASIC SAFETY INSTRUCTIONS 5
4 GENERAL NOTES 6
4.1 Contact address 6
4.2 Warranty 6
4.3 Information on the Internet 6
5 PRODUCT DESCRIPTION 7
5.1 Tightening torque for port connections 7
5.2 Ports 7
5.3 Assembly 8
5.4 Manual override 9
5.5 Circuit functions 9
5.6 Flow restriction function 10
5.7 Standards and directives 12
5.8 Product identification 12
6 TECHNICAL DATA 14
6.1 Operating conditions 14
6.2 Electrical data 15
6.3 Pneumatic data 15
6.4 Materials 15
7 INSTALLATION 16
7.1 Attach device 16
7.2 Connecting device pneumatically 17
7.3 Electrically connecting the device 18
7.4 Rotate the solenoid 20
8 MAINTENANCE 21
8.1 Maintenance work 21
8.2 Faults 21
8.3 Install pilot control 21
9 ACCESSORIES AND SPARE PARTS 22
9.1 Accessories 22
9.2 Spare parts 22
10 TRANSPORTATION, STORAGE, DISPOSAL 24

valvesgo.com

valvesgo.com

1 OPERATING INSTRUCTIONS

The operating instructions describe the entire life cycle of the device. Keep these instructions ready to hand at the operating site.

Important safety information.

- Read these instructions carefully.
- Above all, observe the safety instructions, intended use and usage conditions.
- Persons who work on the device must read and understand these instructions.

1.1 Symbols

DANGER

Warning of an immediate danger.

- Failure to comply will result in death or serious injury.

WARNING

Warns of a potential danger.

- Failure to observe these warnings may result in serious injuries or death.

CAUTION

Warns of a potential hazard.

- Failure to comply with these instructions may result in moderate or minor injury.

NOTE

Warns of damage.

Important tips and recommendations.

Refers to information in these operating instructions or in other documentation.

▶ Highlights instructions to avoid a danger.

→ Highlights a procedure which you must carry out.

1.2 Definition of terms

Term	Definition for these instructions
Device	Type 6518 3/2-way solenoid valve or Type 6519 3/2, 5/2 and 5/3-way solenoid valve

valvesgo.com

valvesgo.com

2 INTENDED USE

Unauthorised use of the Type 6518 and 6519 solenoid valve may be dangerous to people, nearby equipment and the environment.

- The device serves exclusively as a 3/2, 5/2 or 5/3-way solenoid valve for the media that is permitted based on the data sheet for the corresponding type.
- With a properly connected and assembled cable plug, e.g. Bürkert Type 2518, the device complies with degree of protection IP65 in accordance with DIN EN 60529/IEC 60529.
- In potentially explosive environments, the device must only be used in accordance with the specifications on the separate Ex type label. The additional information and safety instructions relating to Ex areas enclosed with the device must be adhered to when deploying the device.
- Devices without a separate Ex type label must not be used in the potentially explosive atmosphere.
- When using the device, observe the authorised data, and the operating and usage conditions specified in the contract documents, the data sheet and the operating instructions.
- Prerequisites for safe and trouble-free operation include correct transport, storage and installation as well as careful operation and maintenance.
- Use the device only as intended.

3 BASIC SAFETY INSTRUCTIONS

These safety instructions do not take into account any unforeseen circumstances or events that occur during installation, operation and maintenance. The operator is responsible for observing the location-specific safety regulations, also with reference to personnel.

Risk of injury due to high pressure and escaping medium.

- Switch off the pressure before working on the device or system. Vent or empty the lines.

Risk of injury from electric shock.

- Switch off the power supply before working on the device or system. Secure it against reactivation.
- Observe the applicable accident prevention and safety regulations for electrical devices.

Risk of burns or fire from hot device surfaces due to longer duty cycles.

- Only touch the device when wearing protective gloves.
- Keep the device away from highly flammable substances and media.

Risk of injury from malfunctioning valves with alternating current (AC).

A seized core causes the coil to overheat, which leads to functional failure.

- Check the working process for proper function.

valvesgo.com

General hazardous situations.

To prevent injuries, observe the following:

- Observe the general rules of technology.
- Never adjust the screws secured in red.
- Use the device only when it is in perfect condition and in accordance with the operating instructions.
- Secure the device or system to prevent unintentional activation.
- After an interruption in the power supply, ensure that the process is restarted in a controlled manner.
- Do not modify the device.
- Do not mechanically load the device.
- Only trained technicians may perform installation and maintenance work.
- Install the device according to the regulations applicable in the respective country.

4 GENERAL NOTES

4.1 Contact address

Germany

Bürkert Fluid Control Systems
Sales Centre
Christian-Bürkert-Str. 13-17
D-74653 Ingelfingen
Tel. +49 (0) 7940 - 10-91 111
Fax +49 (0) 7940 - 10-91 448
Email: info@burkert.com

International

The contact addresses can be found on the back pages of the printed operating instructions.

They are also available online at: country.burkert.com

4.2 Warranty

A precondition for the warranty is that the device is used as intended in consideration of the specified usage conditions.

4.3 Information on the Internet

Operating instructions and data sheets for the Bürkert products can be found on the internet at: country.burkert.com

valvesgo.com

5 PRODUCT DESCRIPTION

The solenoid valves can be used individually on blocks or on valve islands and can be mounted on the modular pneumatic base rail in valve blocks.

Types 6518 and 6519 consist of:

- a pilot control
- valve body with diaphragm and valve seat seals (3/2 and 5/2-way valve) or slide (5/3-way valve)

5.1 Tightening torque for port connections

Observe the following tightening torques when screwing in the port connections. The specified tightening torque may vary depending on the sealing system.

Port size	Recommended tightening torque [Nm]	Maximum tightening torque [Nm]
G1/2	7…9	50
G1/4	4…7	20
NPT1/4	4…7	20
M5 (auxiliary pilot air)	1…1.2	3

5.2 Ports

All ports are marked with numbers on the valve body. The meaning of the numbers is the same for each variant.

No.	Meaning	No.	Meaning
1	Pressure port	3, 5	Exhaust port
2, 4	Working port	12, 14	Pilot pressure port

valvesgo.com

valvesgo.com

5.3 Assembly

5.3.1 3/2 or 5/2-way valve

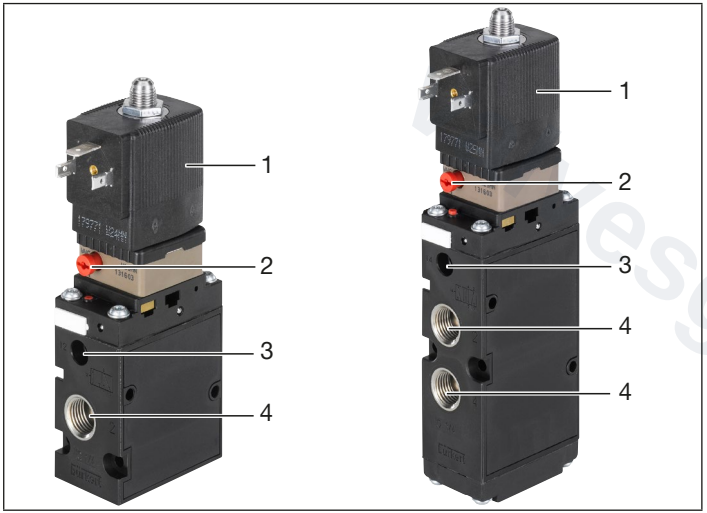

Fig. 1: Valve assembly 3/2 or 5/2-way valve

Item	Description
1	Pilot control
2	Manual override (see Chapter „5.4“)
3	Pilot pressure port
4	Working port

5.3.2 5/3 or 5/2-way pulse valve

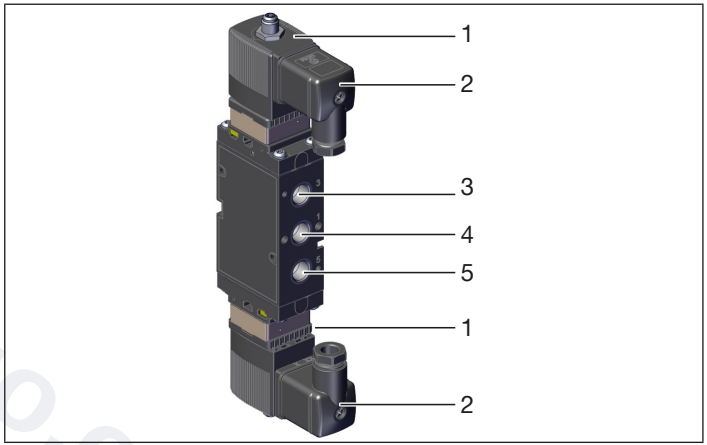

Fig. 2: Valve assembly 5/3 or 5/2-way pulse valve

Item	Description
1	Pilot control
2	Cable plug
3	Exhaust port
4	Pressure port
5	Exhaust port

Pulse-controlled solenoid valves work with two coils that are switched alternatingly.

valvesgo.com

5.3.3 NAMUR 3/2 or 5/2-way valve

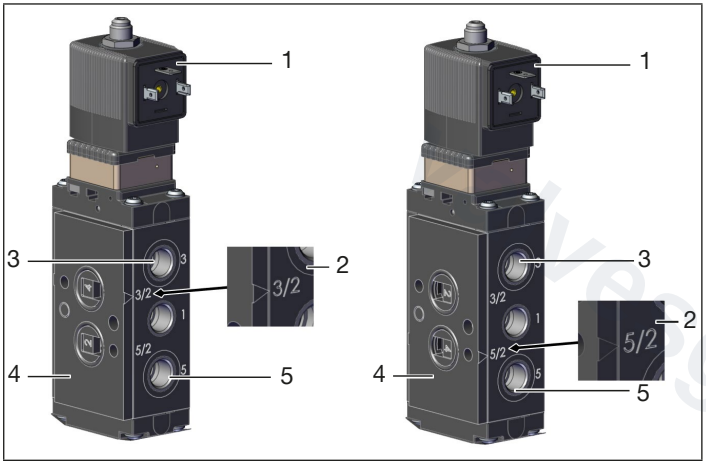

Fig. 3: Valve assembly 3/2 or 5/2-way valve, NAMUR

Item	Description
1	Pilot control
2	Valve function
3	Exhaust port
4	Removable plate
5	Exhaust port

5.4 Manual override

⚠ Only press the manual override when the power is off.

→ To override the valve manually, press the manual override and turn it 90° clockwise until it stops.

5.5 Circuit functions

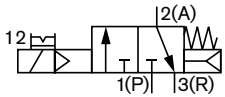	**C, 3/2-way solenoid valve (*for vacuum[1)], with auxiliary pilot air)** Servo-assisted, with manual override, normally closed
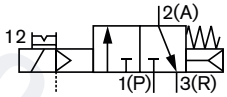 * Vacuum, with auxiliary pilot air	Servo-assisted with auxiliary pilot air, with manual override, normally closed
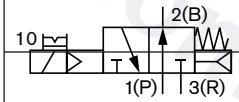	**D, 3/2-way solenoid valve** Servo-assisted, with manual override, normally open
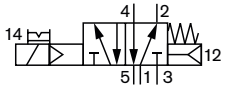	**H, 5/2-way solenoid valve** Servo-assisted, with manual override. Pressure applied via port (1), consequently one of the two ports (2) or (4) are pressurised.

valvesgo.com

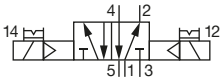	**Z, 5/2-way solenoid valve** Impulse version with 2 coils and manual override. Pressure applied via port (1), consequently one of the two ports (2) or (4) are pressurised
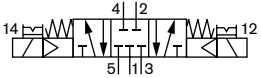	**L, 5/3-way solenoid valve** With manual override. All connections blocked in the central position
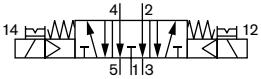	**N, 5/3-way solenoid valve** With manual override. In central position, ports 2 and 4 vented
5/2 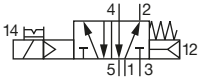 **3/2** 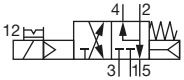	**W, 5/2- or 3/2-way solenoid valve** With manual override and removable plate 5/2 way: pressure applied via port (1). Consequently one of the two ports (2) or (4) are pressurised. 3/2 way: pressure applied via port (1), normally closed

5.6 Flow restriction function

Type 6518 and 6519 have the option to restrict the flow of exhaust air to exhaust ports R and S. The travel speed of the connected actuators is reduced (process valves, cylinders etc.) with this function.

The flow restriction function can either be obtained using the accessories available from Bürkert, or using standard flow restrictors suited to the process environment. The flow restrictor is mounted on the threaded connection of the body (port 3; 5) for this purpose.

The following accessory is available for devices with NAMUR interface to perform the flow restriction function:

- NAMUR flow restrictor plate 3/2-way (ID907217)
- NAMUR flow restrictor plate 5/2-way and 5/3-way (ID 907218)
- NAMUR turning plate (ID907216)

1) *Connect the vacuum generator to port 1.*

valvesgo.com

5.6.1 NAMUR flow restrictor plate 3/2-way

This flow restrictor plate can be used for the following Type 6519 devices in order to control the drive-in/drive-out speeds at the process valve/cylinder independently of each other:

- 5/2-way NAMUR removable plate to 3/2-way position (see Chapter „5.3.3“)

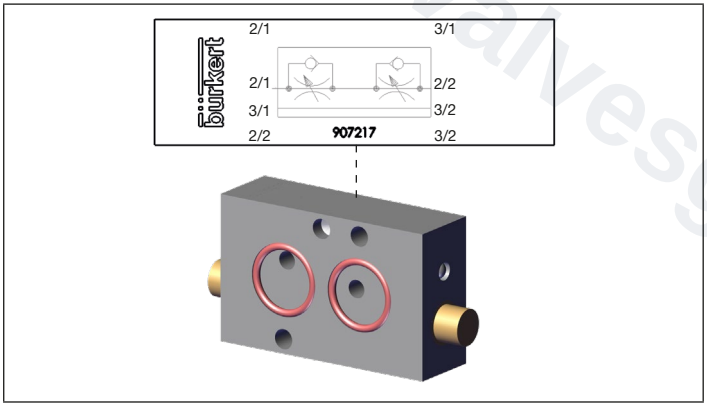

Fig. 4: NAMUR flow restrictor plate with label, 3/2-way

5.6.2 NAMUR flow restrictor plate 5/2-way and 5/3-way

This flow restrictor plate can be used for the following Type 6519 devices in order to control the drive-in/drive-out speeds at the process valve/cylinder independently of each other.

- 5/2-way (see Chapter „5.3.3“)
- NAMUR 5/3-way

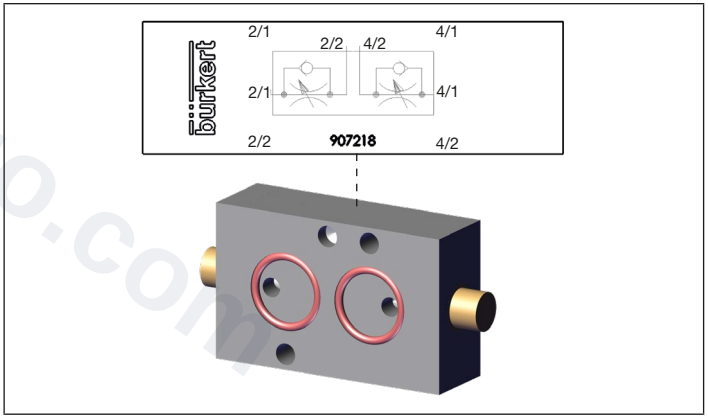

Fig. 5: NAMUR flow restrictor plate with label, 5/2 and 5/3-way

valvesgo.com

valvesgo.com

5.6.3 NAMUR turning plate

This turning plate with silencer is used in order to use 5/2 and 5/3-way NAMUR valves as 3/2 and 3/3-way valves. The normally closed function can be changed to normally open by rotating the turning plate by 180°.

If flow restriction is desired, a standard flow restrictor must be installed at R/5 or S/3.

Detailed description is set out in Chapter „Installation“.

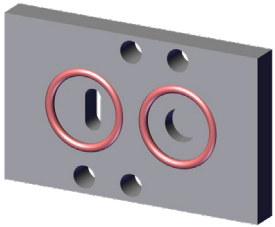

Fig. 6: NAMUR turning plate

5.7 Standards and directives

The device complies with the valid EU harmonisation legislation. In addition, the device also complies with the requirements of the laws of the United Kingdom.

The harmonised standards that have been applied for the conformity assessment procedure are listed in the current version of the EU Declaration of Conformity/ UK Declaration of Conformity.

5.8 Product identification

5.8.1 Labelling on valve body

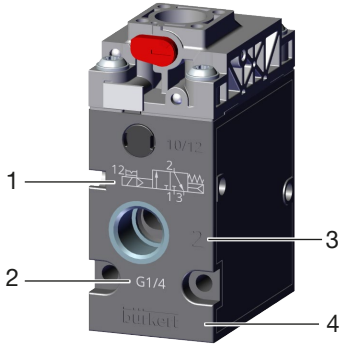

Fig. 7: Labelling on the valve body

Item	Description	Item	Description
1	Circuit function	3	Number of port
2	Port connection	4	Manufacturer

valvesgo.com

valvesgo.com

5.8.2 Type label

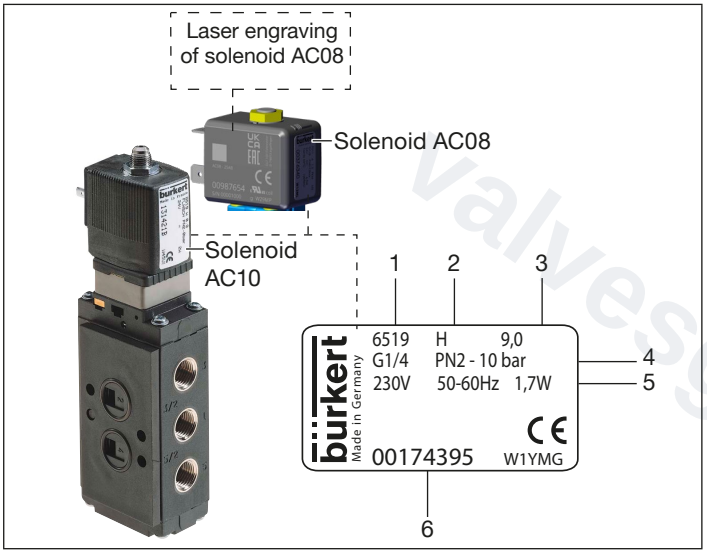

Fig. 8: Location and description of the type label, example

Item	Description	Item	Description
1	Type	4	Type of connection; permitted pressure range
2	Circuit function	5	Voltage; frequency; output
3	Orifice	6	Identification number

5.8.3 Laser engraving of solenoid AC08

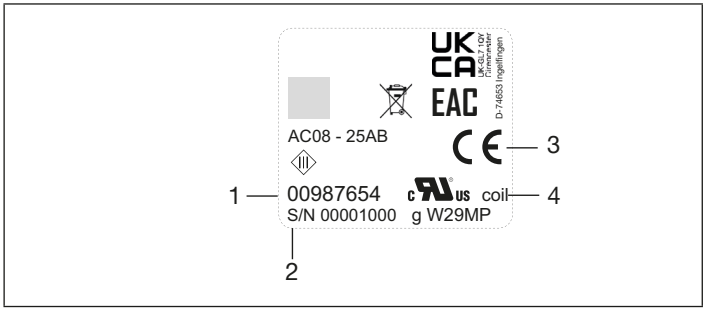

Fig. 9: Description of laser engraving on solenoid AC08

Item	Description	Item	Description
1	Identification number of solenoid AC08	3	CE mark
2	Serial number	4	Approval as per US and Canadian terms

valvesgo.com

6 TECHNICAL DATA

6.1 Operating conditions

Degree of protection (according to DIN EN 60529/IEC 60529)	IP65 (with correctly connected and installed cable plug, see Chapter „6.3“)
Permitted media	Filtered compressed air, oiled and not oiled, neutral gases
Installation position	Any, preferably solenoid actuator face up

Ambient temperature[2)]

Polyamide	–25 °C…+55 °C
Anodised aluminium with polyamide armature	–10 °C…+55 °C
Anodised aluminium with metal armature	–10 °C…+70 °C

Ambient temperature for expanded temperature range[2)]

Aluminium ematalised	–40 °C…+80 °C
Stainless steel	–30 °C…+80 °C

Permitted medium temperature[3)]

Polyamide and anodised aluminium	–10 °C…+55 °C

Permitted medium temperature for expanded temperature range[3)]

Aluminium ematalised and stainless steel	–30 °C…+80 °C

2) *Observe temperature restrictions due to approvals.*

3) *Observe temperature restrictions due to approvals.*

valvesgo.com

6.1.1 Operating conditions for valves with UL/UR approval

Type	Medium temperature	Ambient temperature	Medium
6518	–10 °C…+55 °C	–25 °C…+55 °C	Air
6519			

6.2 Electrical data

Solenoid	AC08	AC10
Ports	DIN EN 175301-803 design C: for cable plug 2516 Industry standard, design B: for cable plug 2507	Industry standard, design A: for cable plug 2518
Operating voltage	see type label	see type label
Voltage tolerance	±10 %	±10 %
Nominal power	1.7 W	2 W to 10 W
Nominal operating mode	Continuous operation 100% duty cycle	Continuous operation 100% duty cycle

6.3 Pneumatic data

Compressed air quality	ISO 8573-1:2010, Class 7.2.4[4)]
Permitted pressure range	Observe specifications on type label. Differential pressure at least 2 bar between ports 1 and 3/5

4) *To prevent the expanded compressed air from freezing,the pressure dew point must be at least 10 K less than the medium temperature.*

6.3.1 External pilot pressure

For valves in auxiliary pilot air variants:

→ Connect compressed air supply to port 12 or 14 (pilot pressure port).

Pilot pressure: at least 70% of working pressure at port 1 (minimum pilot pressure 2.5 bar)

6.4 Materials

Sealing materials depend on the body materials:

Body material	Polyamide	Anodised aluminium	Ematalised aluminium	Stainless steel
Sealing material	NBR, PUR	NBR	FKM, NBR	PU, NBR, FKM

valvesgo.com

7 INSTALLATION

DANGER

Risk of injury due to high pressure and escaping medium.

- Switch off the pressure before working on the device or system. Vent or empty the lines.

Risk of injury from electric shock if the solenoid is installed incorrectly.

- Switch off the power supply before working on the device or system. Secure it against reactivation.
- When installing, make sure that the solenoid is firmly seated on the body cover so the protective conductor connection of the solenoid is connected to the valve body.
- Observe the applicable accident prevention and safety regulations for electrical devices.

WARNING

Risk of injury due to improper installation.

- Only trained technicians may perform installation work.
- Perform installation work using suitable tools only.

Risk of injury due to unintentional activation of the system and uncontrolled restart.

- Secure the system against unintentional activation.
- Following installation, ensure a controlled restart.

7.1 Attach device

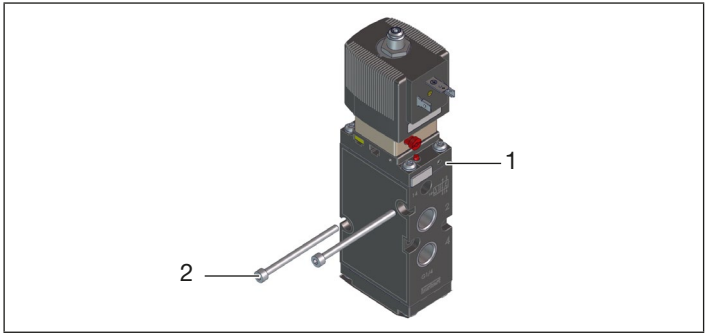

Fig. 10: Attach device

Item	Description	Item	Description
1	Device	3	Fastening screws

→ Fasten device directly to the wall with M4 fastening screws. Tightening torque: min. 2 Nm and max. 5 Nm.

valvesgo.com

7.2 Connecting device pneumatically

WARNING

Risk of injury from quickly accelerating device parts and unconnected compressed air hoses flapping around.

- Before pressurising the valve, check all hose connections and fittings for tight, secure fit.

→ Check the hose lines for contamination and clean them.

→ Install a dirt trap upstream of the valve inlet (≤ 500 mm).

→ Push the hose lines into the push-in connections of the solenoid valves until they come to a stop. Do not exceed the standard screw-in depth.

→ Use PTFE tape or elastomer seal for sealing.

→ Note the assignment of the connections (see Chapter „5.2“).

→ Align hose lines.

7.2.1 Connecting NAMUR variant

Type 6519 NAMUR variant is supplied by the plant in 5/2-way function. The 3/2-way function is set by rotating the removable plate by 180°.

When using as a 3/2-way valve:

→ Close port 3 with G1/4 sealing plug supplied.

When using on large actuators with fast discharge time:

→ Use a silencer instead of the sealing plug.

7.2.1.1 Mount turning plate on NAMUR variant

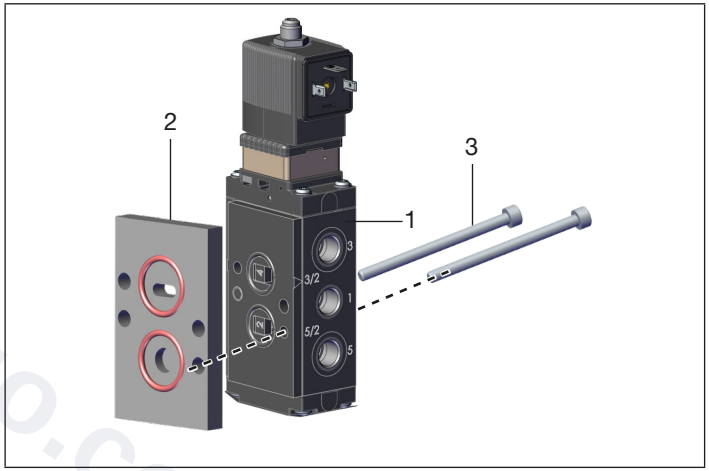

Fig. 11: Mount turning plate

Item	Description
1	NAMUR device
2	Turning plate

Item	Description
3	M5 x 45 mm fastening screws

→ Mount turning plate on NAMUR device with 4 fastening screws supplied. Observe tightening torque of min. 2 Nm to max. 5 Nm.

valvesgo.com

7.2.1.2 Mount 5/2, 3/2-way flow restrictor plate on NAMUR variant

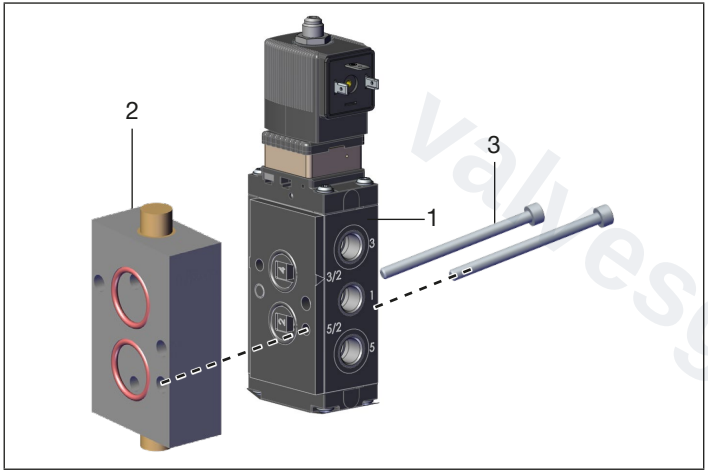

Fig. 12: Mount flow restrictor plate

Item	Description
1	NAMUR device
2	Flow restrictor plate

Item	Description
3	M5x55 mm fastening screws

→ Mount turning plate on NAMUR device with 4 fastening screws supplied. Observe tightening torque of min. 2 Nm to max. 5 Nm.

7.3 Electrically connecting the device

WARNING

Risk of injury from electric shock.

- Switch off the power supply before working on the device or system. Secure it against reactivation.
- Observe the applicable accident prevention and safety regulations for electrical devices.

If there is no protective conductor contact between the solenoid and the body, there is a risk of electric shock.

- Always connect the protective conductor.
- Check electrical continuity between solenoid and body.

Information on the cable plug in the corresponding operating instructions under country.burkert.com

Observe the voltage and type of current on the type label.

→ Fasten cable plug. Observe the tightening torque (see table „Tightening torques“).

→ Check that the seal (see „Fig. 13“) is correctly fitted.

valvesgo.com

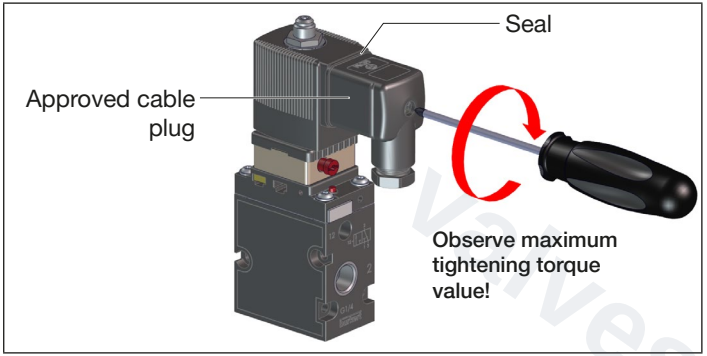

Fig. 13: Electrically connecting the valve

→ Connect protective conductor and check electrical continuity between solenoid and housing (see protective conductor test values).

NOTE

If the cable plug EN 175-301-803 is structured so that the screw is at the top, a seal made from a material that is compatible with your process must be fixed under the screw head.

Protective conductor test values

Resistor	Test voltage	Test current
max. 0.1 Ω	12 V	1 A

Tightening torques

Solenoid	Cable plug	Design	Max. tightening torque
AC08	2507	B	0,3 Nm
	2516	C	
AC10	2509, 2513, 2518	A	1 Nm

valvesgo.com

valvesgo.com

7.3.1 Control of pulse variant

Polarity must be correct for the device to function: observe labelling on the top of the coil. Impulse time at least 50 ms.

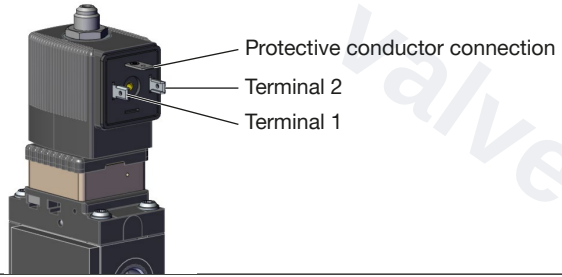

Polarity	Pilot control	Amplifier	Terminal pin assignment
– Switch ON +	Valve (P-seat) is opened	1 → 4 pressurised 2 → 3 vented	(+) Terminal 2 (–) Terminal 1
+ Switch OFF –	Valve (P-seat) is closed	1 → 2 pressurised 4 → 5 vented	(+) Terminal 1 (–) Terminal 2

7.4 Rotate the solenoid

Solenoid can be rotated 4 x 90° (with block installation 2 x 180°).

→ Loosen the nut.

→ Rotate the solenoid.

NOTE

Damage to the device caused by the wrong tool.
▸ Use open-end wrench.

→ Fasten the solenoid with a nut, using an open-end wrench.
Observe maximum tightening torque:
Solenoid AC08: 2.8 Nm,
Solenoid AC10: 5 Nm.

valvesgo.com

valvesgo.com

8 MAINTENANCE

WARNING

Risk of injury due to improper maintenance.
- Only trained technicians may perform maintenance work.
- Perform maintenance work using suitable tools only.

Risk of injury due to unintentional activation of the system and uncontrolled restart.
- Secure the system against unintentional activation.
- Ensure a controlled restart after maintenance.

8.1 Maintenance work

If the information in these operating instructions for using the valve is followed, the valve will work without requiring maintenance.

8.2 Faults

If faults occur, check whether:
- the device has been installed according to regulations
- the electrical and pneumatic connections have been properly set up
- the device is not damaged
- all screws have been tightened
- voltage and pressure have been applied
- the pipelines are clean

8.2.1 Valve does not actuate

Possible cause:
- Short circuit or coil interrupted
- Core or core area contaminated
- Operating pressure outside the permitted pressure range

8.2.2 Valve does not close

Possible cause:
- Interior of the valve contaminated

8.3 Install pilot control

WARNING

Risk of injury from looseness of valve.
- Make sure that the O-rings/seals fit the valve properly.

Overheating, risk of fire.
Connecting the solenoid without first installing the pilot control will lead to overheating and will destroy the solenoid.
- Only connect the solenoid after installing the pilot control.

NOTE

Caution: risk of breakage.
- Do not use the solenoid as a lever arm.

valvesgo.com

valvesgo.com

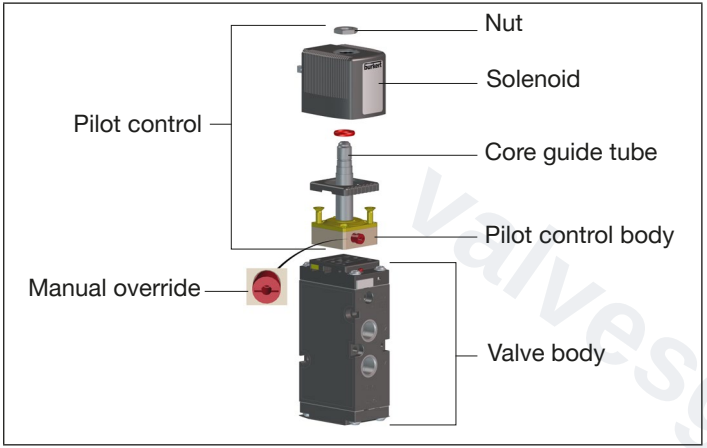

Fig. 14: Install pilot control

→ Screw pilot control body onto the valve body.
Observe tightening torque of max. 1.5 Nm.

→ Position the solenoid on the core guide tube.
Solenoid can be rotated by 4 x 90° (only 2 x 180° with block installation).

NOTE

Damage to the device caused by the wrong tool.
▸ Use open-end wrench.

→ Fasten the solenoid using a nut with an open-end wrench.
Observe tightening torque of max. 5 Nm.

9 ACCESSORIES AND SPARE PARTS

CAUTION

Risk of injury and/or damage due to incorrect parts.

Incorrect accessories and unsuitable spare parts may cause personal injuries and damage to the device and the area around it.
▸ Only use accessories and spare parts from Bürkert.

9.1 Accessories

Device variant	Flow restrictor plate for 3/2-way	Flow restrictor plate for 5/2-way	Turning plate for 3/2-way
NAMUR	907217	907218	907216

9.2 Spare parts

Spare parts can be ordered depending on the variant and valve assembly:

- Order by stating the spare part set number (SET 1, SET 2, SET 3) and identification number (this can be seen on the type label of the device)
- Order by entering identification number in eShop (see „9.2.1“)

The right variant, and therefore the right spare part, can be determined using the design of the plug.

valvesgo.com

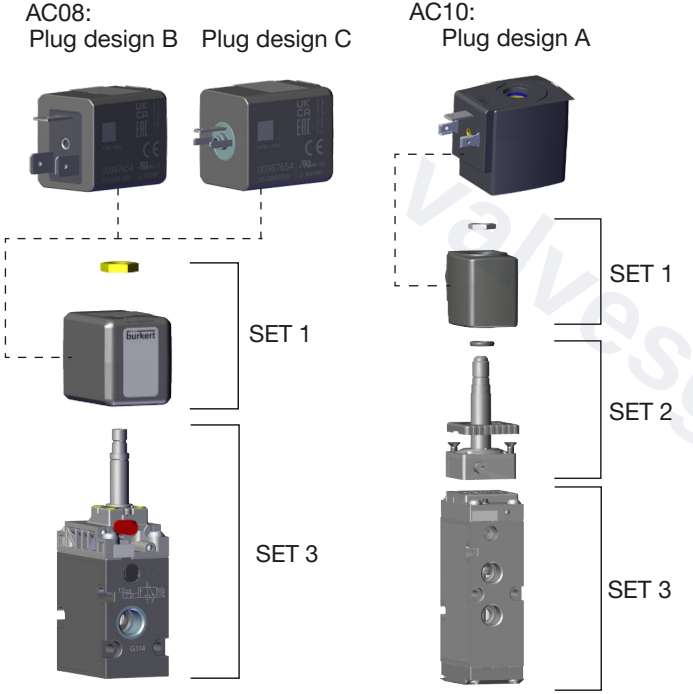

SET 1	Coil set
SET 2	Armature
SET 3	Pneumatic valve without coil

Fig. 15: Spare part sets

9.2.1 Order spare parts in eShop

→ Open Bürkert eShop on the internet.

→ Log in or register.

→ Find spare parts using material numbers.

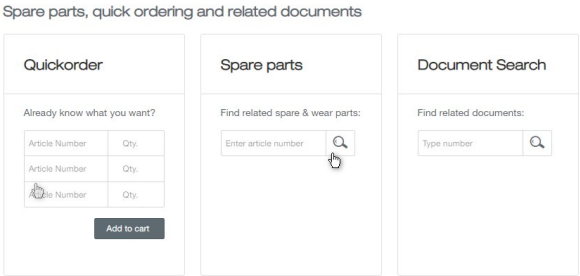

→ Put spare parts in the basket and complete order.

If you cannot find spare parts, contact your Bürkert service employee.

valvesgo.com

10 TRANSPORTATION, STORAGE, DISPOSAL

NOTE

Damage in transit due to inadequately protected devices.

- Protect the device against moisture and dirt in shock-resistant packaging during transportation.
- Observe permitted storage temperature.

Incorrect storage may damage the device.

- Store the device in a dry and dust-free location.
- Storage temperature –40 °C…+55 °C.

Environmentally friendly disposal

- Follow national regulations regarding disposal and the environment.
- Collect electrical and electronic devices separately and dispose of them as special waste.

Further information at country.burkert.com.

valvesgo.com

valvesgo.com

valvesgo.com

valvesgo.com

bürkert
FLUID CONTROL SYSTEMS

valvesgo.com

country.burkert.com

valvesgo.com