bürkert
FLUID CONTROL SYSTEMS

Type 2933, 2934, 2935, 2973, 2974, 2975

2/2-way-diaphragm valve with manually operated actuator
2/2-Wege-Membranventil mit handbetätigtem Antrieb
Vanne à membrane 2/2 avec actionneur manuel

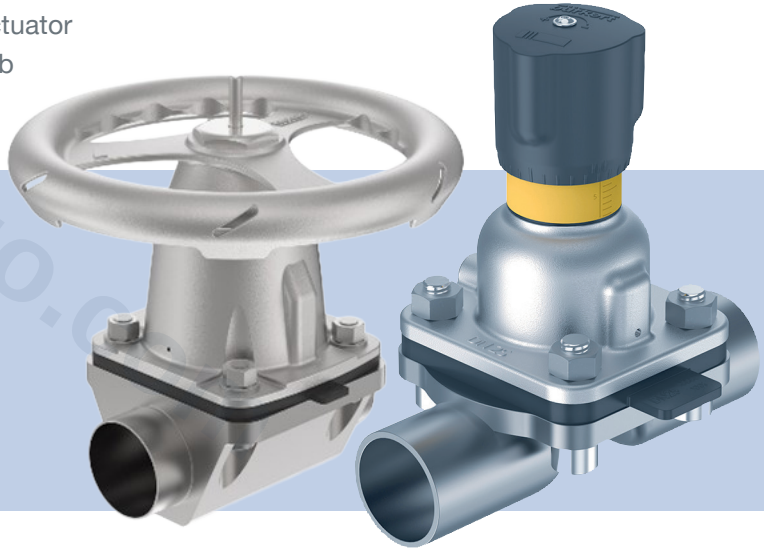

valvesgo.com

Operating Instructions

Bedienungsanleitung
Manuel d'utilisation

MAN 1000587078 EN Version: DStatus: RL (released | freigegeben) printed: 21.08.2026

valvesgo.com

valvesgo.com

We reserve the right to make technical changes without notice.
Technische Änderungen vorbehalten.
Sous réserve de modifications techniques.

© Bürkert Werke GmbH & Co. KG, 2023 - 2025

Operating Instructions 2512/03_EU-ML_00815442 / Original DE

valvesgo.com

1 OPERATING INSTRUCTIONS 4
1.1 Symbols 4
1.2 Definition of terms 4
2 INTENDED USE 5
3 BASIC SAFETY INSTRUCTIONS 5
4 GENERAL NOTES 7
4.1 Contact addresses 7
4.2 Warranty 7
4.3 Information online 7
5 PRODUCT DESCRIPTION 7
5.1 Structure and description 7
5.2 Variants 8
5.3 Function 9
5.4 Product identification 10
6 TECHNICAL DATA 12
6.1 Standards and directives 12
6.2 Mechanical data 12
6.3 Valve body port connections 13
6.4 Operating conditions 13
7 INSTALLATION 16
7.1 Information for the correct installation position 16
7.2 Preparatory work 18
7.3 Welding tank bottom body 18
7.4 Installing device 18
7.5 Setting stroke limit 20
7.6 Locking the handwheel, Type 293x, diaphragm size 65...100 22
7.7 Locking the handwheel, Type 297x, diaphragm size 8...50 23
7.8 Installing inductive proximity switch 23
8 MAINTENANCE 24
8.1 Cleaning 24
8.2 Maintenance work 24
8.3 Replacing the diaphragm 25
9 SPARE PARTS 28
9.1 Ordering spare parts 28
10 TRANSPORTATION, STORAGE, DISPOSAL 30

valvesgo.com

1 Operating instructions

The operating instructions describe the entire life cycle of the device. Keep these instructions ready to hand at the operating site.

Important safety information.

- Read these instructions carefully.
- Above all, observe the safety instructions, intended use and usage conditions.
- All persons working on the device must read and understand these instructions.

1.1 Symbols

DANGER

Warns of an immediate danger.

- Failure to comply will result in death or serious injury.

WARNING

Warns of a potential danger.

- Failure to observe these warnings may result in serious injuries or death.

CAUTION

Warns of a potential hazard.

- Failure to comply with these instructions may result in moderate or minor injury.

NOTE

Warns of damage.

Important tips and recommendations.

Refers to information in these operating instructions or in other documentation.

- Highlights instructions to avoid a danger.

→ Highlights a procedure which you must carry out.

1.2 Definition of terms

Term	Definition for these instructions
Device	Diaphragm valve, Types 2933, 2934, 2935, 2973, 2974 and 2975
Ex area	Potentially explosive atmosphere
Explosion protection approval	Approval in potentially explosive atmosphere

valvesgo.com

2 Intended use

The diaphragm valve, Types 2933, 2934, 2935, 2973, 2974 and 2975 is designed to control the flow of media. The authorised media are listed in chapter "Technical data"**.**

- Use the device only as intended. Non-intended use of the device may be dangerous to people, nearby equipment and the environment.
- Prerequisites for safe and trouble-free operation are correct transportation, correct storage, installation, start-up, operation and maintenance.
- To use the device, observe the permitted data, operating conditions and usage conditions. These specifications can be found in the contract documents, the operating instructions and on the type label.
- Use the device only in conjunction with third-party devices and components recommended or approved by Bürkert.
- Only use equipment that is approved for this type of potentially explosive atmosphere. These devices are identified by a separate Ex type label. Before use, note the information on the separate Ex type label and the Ex supplementary information or the separate Ex operating Instructions.
- Protect device from environmental influences (e.g. radiation, air humidity, fumes). If you have any questions, contact your Bürkert sales department.

3 Basic safety instructions

These safety instructions do not take into account any unforeseen circumstances or events that occur during installation, operation or maintenance. The operator is responsible for observing the location-specific safety regulations, also with reference to personnel.

Risk of injury due to high pressure and escaping medium.

- Switch off the pressure before working on the device or system. Vent or empty the lines.

Electric shock due to installed electrical component.

- Before working on the device or system, switch off the power supply. Secure against reactivation.
- Observe any applicable accident prevention regulations and safety regulations for electrical devices.

Danger of bursting in case of overpressure.

If the device bursts, the medium may cause injuries, burns or scalds.

- Do not exceed the maximum medium pressure. Observe specifications on the type label.
- Observe allowable temperatures.

Danger of burns and risk of fire.

Quickly switching actuators or hot medium may cause the surface of the device to become hot.

- Only touch the device when wearing protective gloves.
- Keep the device away from highly flammable substances and media.

Medium may leak out if the diaphragm is worn.

- Inspect relief bore for any medium leakages.
- Change the diaphragm if there is escaping medium.
- If the medium is hazardous, secure the area around the leakage to prevent risks.

Risk of crushing by mechanically powered parts.

The upwards and downwards movement of the device means there is a risk of crushing.

- Do not reach into the openings of the valve body.

Danger due to loud noises.

Depending on the usage conditions, the device may generate loud noises. More detailed information on the likelihood of loud noises is available from the relevant sales department.

- Wear hearing protection when in the vicinity of the device.

To avoid injury, observe the following:

- Do not make any changes to the device and do not subject it to mechanical stress.
- Only trained technicians may perform installation and maintenance work.
- The correct tools must be used to perform installation and maintenance work.
- Heavy equipment must only be transported, assembled and disassembled with the help of a second person as appropriate and using suitable apparatus.
- Only tighten the device by hand when closing it, and do not use any tools or aids. Too much tightening may damage the device.
- The process must be restarted in a defined or controlled manner after an interruption in the power supply or pneumatic supply.
- Operate the device only when it is in perfect condition and in accordance with the operating instructions.
- For applications planning and operation of the device, observe the plant-specific safety regulations.
- Only the media listed in chapter “Technical data” should be fed into the port connections.
- Observe the general rules of technical equipment.
- The plant owner is responsible for the safe operation and handling of the plant.

valvesgo.com

valvesgo.com

4 General notes

4.1 Contact addresses

Germany

Bürkert Fluid Control Systems
Sales Centre
Christian-Bürkert-Str. 13–17
D-74653 Ingelfingen
Tel. +49 (0) 7940-10 91 111
Fax +49 (0) 7940-10 91 448
Email: info@burkert.com

International

The contact addresses can be found on the back pages of the printed operating instructions.

They are also available online at: country.burkert.com.

4.2 Warranty

A precondition for the warranty is that the device is used as intended in consideration of the specified usage conditions.

4.3 Information online

Operating instructions and data sheets for Types 2933, 2934, 2935, 2973, 2974, 2975 can be found online at: country.burkert.com.

5 Product description

5.1 Structure and description

The device is a manually operated valve, consisting of an actuator, a diaphragm and a valve body.

The manual actuator is available in the following sizes:

Diaphragm size	Handwheel size	Desig-nation	Handwheel diameter [mm]	Slope per ro-tation [mm]
8	T	Tiny	35	1.5
15...25	S	Small	45	1.75
32...50	M	Medium	110	2.0
65...100	H	Huge	240	4.0

Tab. 1: Handwheel sizes

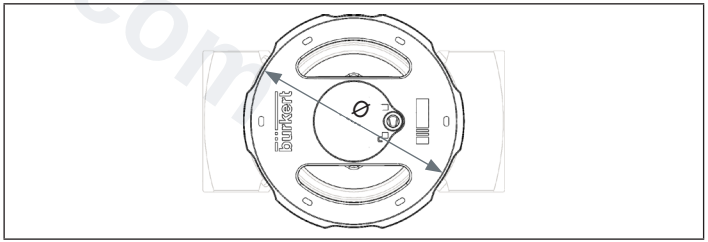

Fig. 1: Handwheel diameter

valvesgo.com

5.2 Variants

The 293x and 297x Types differ in terms of the structure of the actuator and its possible functions. The Type 293x is fitted with a minimum stroke limiter. The Type 297x is equipped with a minimum and maximum stroke limiter and a locking mechanism.

The variants are distinguished by the letter “x” in the type designation:

3: 2-way body
4: T-valve body
5: tank bottom body

5.2.1 Type 2933 with 2-way valve body (diaphragm size 8...50)

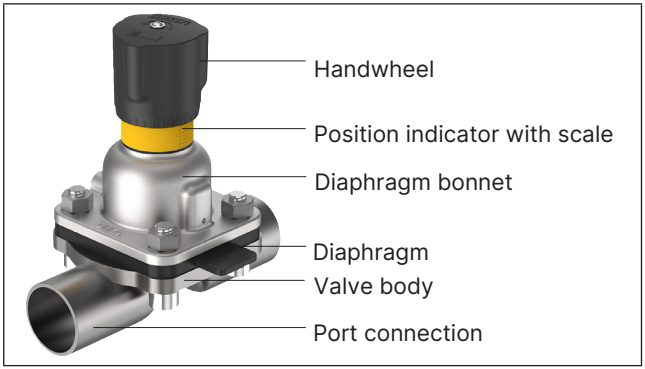

Fig. 2: Example of the 2/2-way valve, Type 2933

5.2.2 Type 2934 with T-valve body (diaphragm size 8...50)

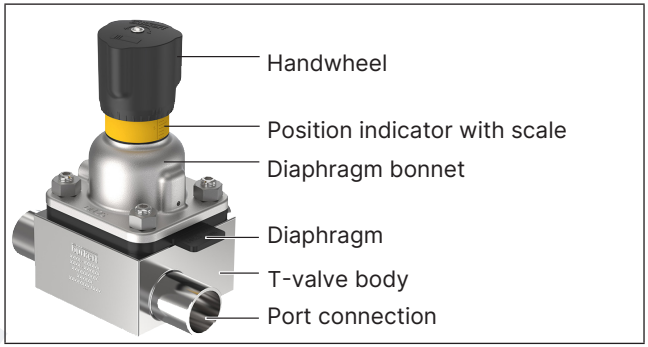

Fig. 3: Example of the diaphragm valve with T-body, Type 2934

5.2.3 Type 2935 with tank bottom body (diaphragm size 8...50)

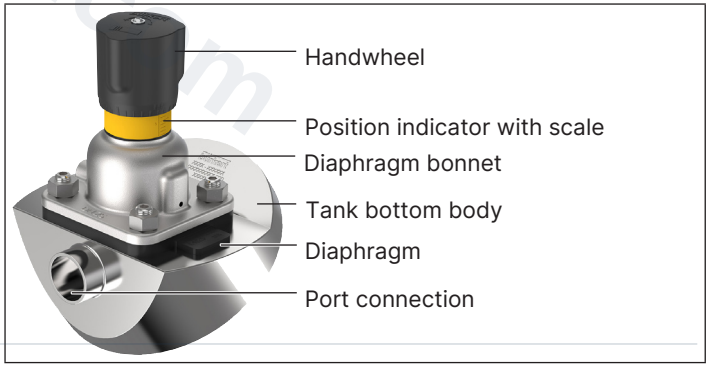

Fig. 4: Example of the valve with tank bottom body, Type 2935

valvesgo.com

English
valvesgo.com

5.2.4 Types 2933, 2934 or 2935 (diaphragm size 65...100)

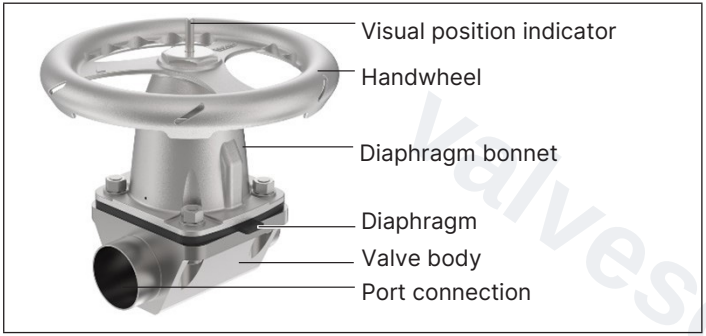

Fig. 5: Example of the 2/2-way valve, Type 2933 (diaphragm size 65...100)

5.2.5 Types 2973, 2974 or 2975

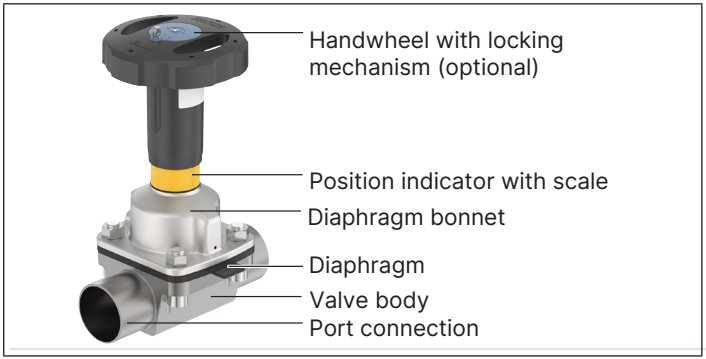

Fig. 6: Example of the 2/2-way valve, Type 2973

5.3 Function

By manually overriding the handwheel, the force is transmitted via a spindle and the valve is opened or closed. The medium in the valve body is either approved or blocked off. Turning the handwheel anticlockwise opens the valve, turning it clockwise closes it.

To protect the actuator, we recommend not closing the actuator with more force than is required to close the valve tightly.

5.3.1 Position indicator

The visibility of the yellow mark is not directly correlated with the closed position of the valve. Depending on the structure of the valve, the marking may:

- not be visible when the valve is open, or
- be visible when the valve is closed.

5.3.1.1 Actuator, diaphragm size 8

Turning the handwheel counterclockwise reveals the yellow position indicator as the valve opens further. It is mounted on the diaphragm bonnet below the handwheel.

5.3.1.2 Actuator, diaphragm size 15...50

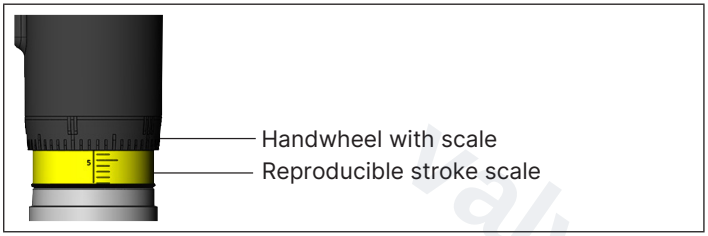

Fig. 7: Position indicator

Turning the handwheel counterclockwise reveals the yellow position indicator and the scale marked on it as the valve opens further.

The scale on the handwheel determines the rotation position of the handwheel (Type 293x: 30 positions, Type 297x: 50 positions).

The stroke scale shows the relative position of the valve and serves as a fixation point for determining the rotation position.

5.3.1.3 Actuator, diaphragm size 65...100

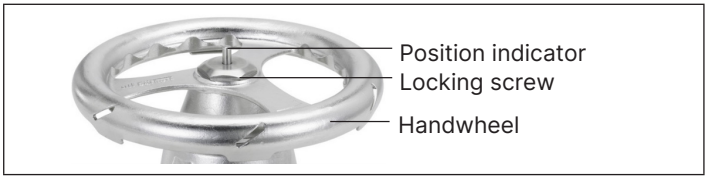

Fig. 8: Position indicator

When you turn the handwheel counterclockwise, the position indicator inside the locking screw becomes visible.

5.4 Product identification

5.4.1 Type label

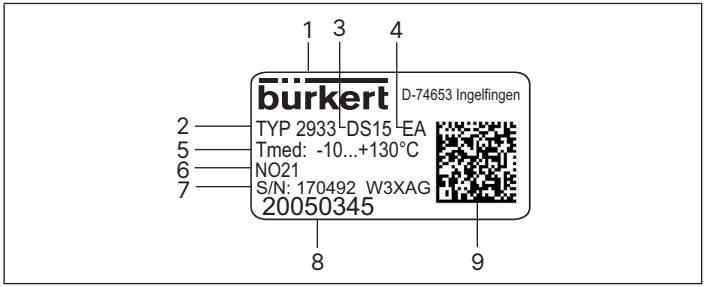

Fig. 9: Description of the type label (example)

Item	Description
1	Manufacturer
2	Type
3	Diaphragm size
4	Seal material
5	Medium temperature

Item	Description
6	Valve body surface roughness
7	Serial number
8	Article number
9	Data matrix code for product identification

valvesgo.com
English

5.4.2 Labelling on forged steel valve body

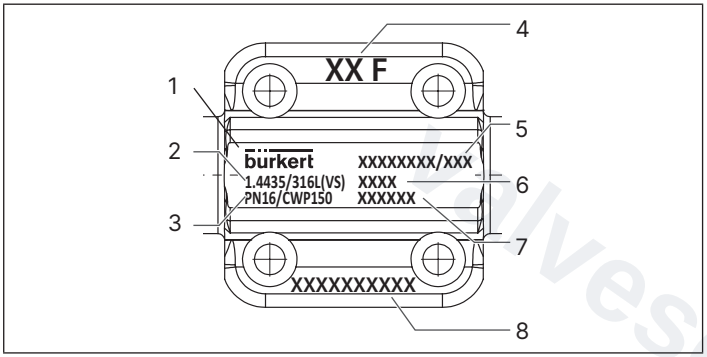

Fig. 10: Labelling on forged steel valve body

Item	Description
1	Company logo
2	Material
3	Nominal pressure
4	Batch number

Item	Description
5	Production number/ serial number
6	Self-draining angle
7	Customer-specific text (optional)
8	Nominal diameter and pipe dimensions

5.4.3 Labelling on cast valve body

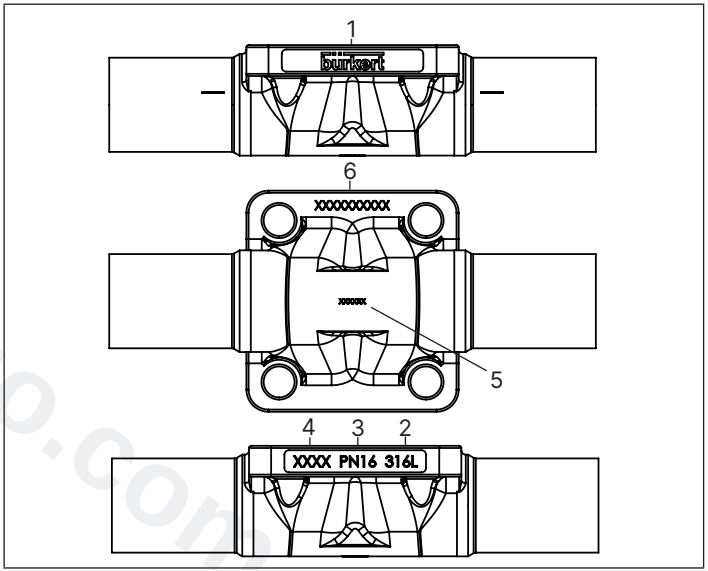

Fig. 11: Labelling on cast valve body

Item	Description
1	Company logo
2	Material
3	Nominal pressure

Item	Description
4	Diaphragm size
5	Batch number
6	Nominal diameter and pipe dimensions

5.4.4 Labelling on tube valve body

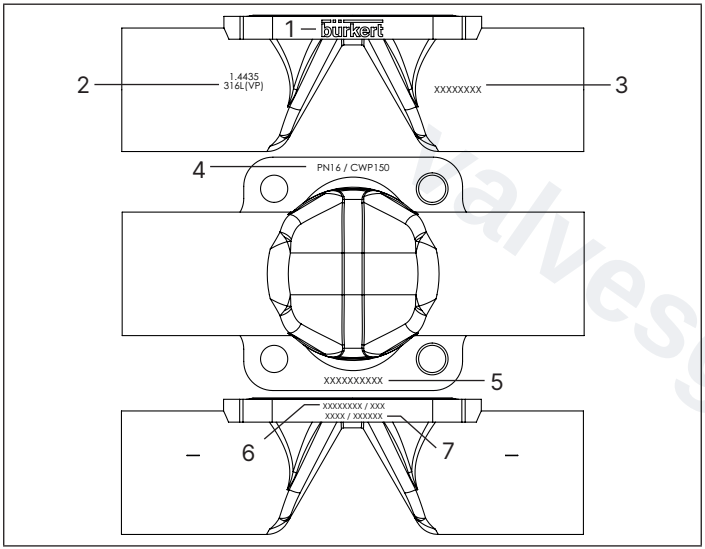

Fig. 12: Labelling on tube valve body

Item	Description
1	Company logo
2	Material
3	Heat
4	Nominal pressure

Item	Description
5	Nominal diameter and pipe dimensions
6	Serial number
7	Self-draining angle

6 Technical data

6.1 Standards and directives

The device complies with the valid EU harmonisation legislation. In addition, the device also complies with the requirements of the laws of the United Kingdom.

The harmonised standards that have been applied for the conformity assessment procedure are listed in the current version of the EU Declaration of Conformity/ UK Declaration of Conformity.

6.2 Mechanical data

Materials

Valve body, Types 2933, 2973	PVC-C, PVC-U, PP, PVDF Precision-cast stainless steel (VG), Forged steel (VS), Stainless steel tube valve body (VP)
Valve body, Types 2934, 2935, 2974, 2975	Stainless steel block material
Actuator	Handwheel and diaphragm bonnet: PPS, handwheel: PPS and diaphragm bonnet: stainless steel, handwheel and attachment: stainless steel (Type 293x only)
Diaphragm	EPDM, PTFE/EPDM, advanced PTFE/EPDM, laminate made from GYLON® and EPDM, FKM

valvesgo.com
English

6.3 Valve body port connections

Stainless steel valve body	Welded connection Clamp connection Threaded connection Flange connection
Plastic valve body	Adhesive and welded connection Adhesive and weld socket connection

6.4 Operating conditions

Media	Dirty, aggressive, ultrapure, sterile media with higher viscosity

6.4.1 Allowable temperatures

Ambient temperature for actuators	–10...+130 °C[1)] (up to +150 °C for short periods), autoclavable

Medium temperature for valve body

Stainless steel	–10...+150 °C
PVC-U (see "Fig. 13")	10...+60 °C
PVC-C (see "Fig. 13")	10...+80 °C
PVDF (see "Fig. 13")	–20...+120 °C
PP (see "Fig. 13")	10...+90 °C

1) *When using plastic cover caps for hexagon nuts and hexagon bolts, the maximum ambient temperature is limited to 60 °C (temporarily: 80 °C).*

Medium temperature for diaphragms

EPDM (AD)	–10...+143 °C Steam sterilisation up to +150 °C for 60 min
FKM (FF)	0...+130 °C No steam, dry heat up to +150 °C for 60 min
PTFE (EA)	–10...+130 °C Steam sterilisation up to +140 °C for 60 min
Advanced PTFE (EU)	–5...+143 °C Steam sterilisation up to +150 °C for 60 min
GYLON® (ER)	–5...+130 °C Steam sterilisation up to +140 °C for 60 min

valvesgo.com

6.4.2 Permitted medium pressure

Permitted medium pressure for plastic valve body depending on medium temperature:

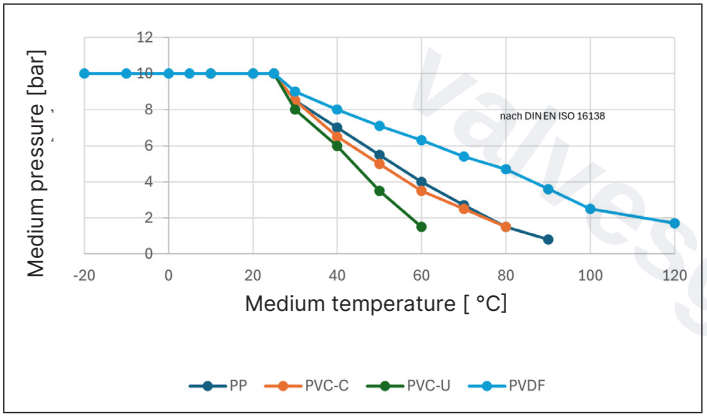

Fig. 13: Pressure temperature diagram for plastic valve body as per DIN EN ISO 16138

This information is important for the selection of the material. Observe the permitted operating pressure, depending on the medium temperature.

Maximum permitted medium pressure

The values are valid for valve bodies made from:

- Plastic
- Stainless steel: block material, forged or casted and tube valve body

Diaphragm size	Maximum permitted medium pressure [bar]	
	EPDM/FKM	PTFE/advanced PTFE/ GYLON®
8	10	10
15	10	10
20	10	10
25	10	10
32	10	10
40	10	10
50	7[2)]/10	7[2)]/10
65	10	10
80	10	10
100	6	6

Tab. 2: Maximum permitted medium pressure

2) For handwheel and diaphragm bonnet made from PPS.

6.4.3 Maximum permissible tightening torque for the handwheel

→ Turn the handwheel only until you can feel the valve closing.

→ Do not tighten any further. The diaphragm may be damaged.

The visibility of the yellow mark is not directly correlated with the closed position of the valve. Depending on the structure of the valve, the marking may:

- not be visible when the valve is open, or
- be visible when the valve is closed.

Diaphragm size	Medium pressure [bar]	Tightening torque[3]			
		Static		Dynamic	
		EPDM/ FKM	PTFE	EPDM/ FKM	PTFE
8	10	0.6	1.1	0.9	1.2
15	10	0.8	1.7	1.5	2.5
20	10	0.9	3	2.0	4.5
25	10	1.2	3.5	3.6	5
32	10	2.5	4	8.0	15
40	10	4.5	7	12.0	15
50	10	6.0	11	15.0	20
65	10	8.0	23	28.0	40
80	10	12.0	21	50.0	50
100	6	11.0	22	52.0	55

3) A tolerance of +10% applies to the tightening torques.

Depending on the intended use (static or dynamic tightness), the specified tightening torques must be applied to achieve the specified medium pressure.

Notes

Static tightness:

The diaphragm valve is closed (the diaphragm is seated against the valve seat). Pressure is applied to one side of the valve seat. At the specified pressure, there is no leak across the valve seat.

Dynamic tightness:

The diaphragm valve is open and the medium is flowing through it. The outlet side is only slightly restricted by the downstream components. Pressure is applied to both sides of the valve seat. The diaphragm valve is closed until the specified tightening torque is reached. At the specified pressure, the diaphragm valve seals tightly against the valve seat.

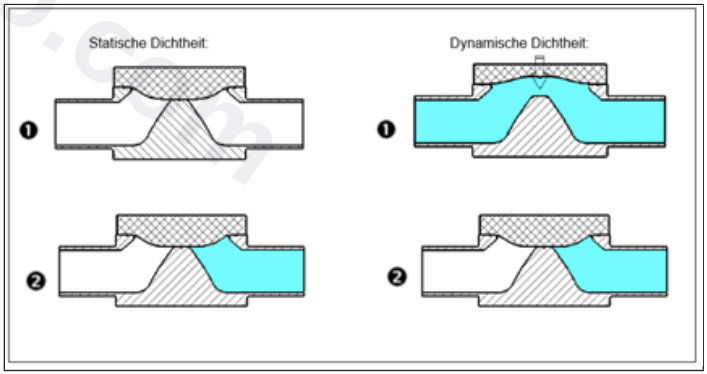

Fig. 14: Static and dynamic tightness

7 Installation

DANGER

Risk of injury due to high pressure and escaping medium.

- Switch off the pressure before working on the device or system. Vent or empty the lines.

WARNING

Risk of injury due to improper installation.

- Installation may be carried out by authorised technicians only and with the appropriate tools.
- Observe tightening torques.

Risk of injury from unintentional activation of the system and uncontrolled restart.

- Secure the system against unintentional activation.
- Following installation, ensure a controlled restart.

CAUTION

Risk of injury due to heavy device.

During transportation or installation work, a heavy device may fall down and cause injuries.

- Transport, install and remove heavy device with the aid of a second person only.
- Use suitable tools.

7.1 Information for the correct installation position

Depending on the valve body, the installation position of the diaphragm valve is different.

Installation for leakage detection:

One of the relief bores in the diaphragm bonnet for monitoring leakages must be at the lowest position.

7.1.1 Installation position of 2/2-way valve body

Installation position: any, preferably actuator facing up.

Ensuring self-draining:

It is the responsibility of the installer and the operator to ensure self-draining.

Observe the rules for self-draining during installation:

1. Inclination angle of the pipeline:
   - The angle of inclination should correspond to the angle of inclination of the pipeline. For the pipeline, we recommend the inclination angles according to the valid ASME BPE.
2. Self-draining angle for valve body:
   - The self-draining angle (α) depends on the valve body size and the inner diameter of the port connection (DN).
   - The self-draining angle is specified as a value on forged steel valve bodies (VS) and tube valve bodies (VP) (see “Fig. 10” and “Fig. 12”).

- The marking on the port connection of the valve body serves as an orientation aid. The marking must point upwards.
- The actual self-draining angle must be set with a suitable measuring tool.
- For valve bodies without angle information, you can find the self-draining angle on the internet: country.burkert.com/ Type/Manuals/Supplementary information "Angle information for self-drainage of diaphragm valves".

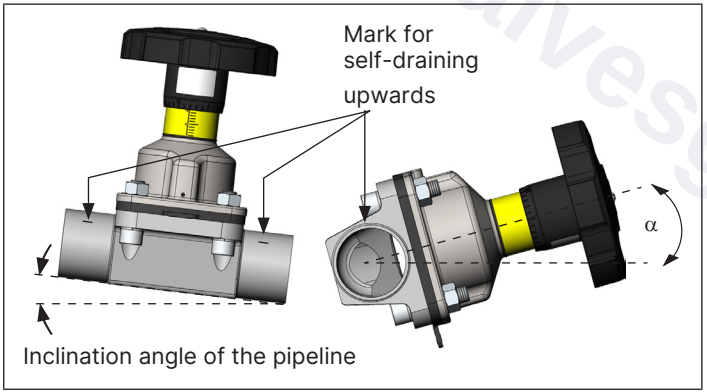

Fig. 15: Installation position for self-draining of the valve body

7.1.2 Installation position of T-valve body

The following installation positions are recommended for the installation of the T-valves in circular pipelines:

When medium is fed:	When removing a medium:
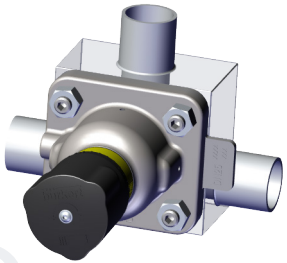	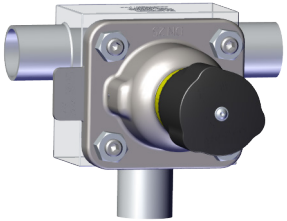

Fig. 16: Installation position of Types 2934/2974

7.2 Preparatory work

→ Clear impurities from pipelines (seal material, metal chips, etc.).

→ Support and align pipelines.

Device with adhesive or welded connection:

The actuator and diaphragm must be dismantled before welding or bonding the valve body.

7.3 Welding tank bottom body

DANGER

Risk of injury due to high pressure and escaping medium.

- Switch off the pressure before working on the device or system. Vent or empty the lines.

Recommendations

Observe the following sequence:

1. Weld the tank bottom body to the container base before the container is assembled. It is possible to weld onto a ready-assembled container but it is more difficult. Note: weld the tank bottom body in the middle of the container base so that the container can be optimally drained.
2. Weld the tank bottom body into the pipeline.

→ Ensure that pipelines are in alignment.

→ Support and align pipelines. To ensure that the pipeline is self-draining, we recommend the inclination angles according to the valid ASME BPE.

For information on containers and instructions for welding, refer to the ASME VIII Division I standard. Check the batch number indicated on the manufacturer's certificate 3.1 supplied before starting welding work.

Observe the applicable laws of the country with regard to the qualification of welders and the execution of welding work.

→ Weld the tank bottom body to the container.

NOTE

Before welding, note the following:

- Only use welding materials which are suitable for the tank bottom body.
- The tank bottom valve must not collide with any other installation part. The actuator must be easy to install and remove.

→ Weld the tank bottom body into the pipeline.
Ensure that there is no voltage present and minimal vibration during installation.

→ Install diaphragm and actuator after welding.

7.4 Installing device

NOTE

The following must be heeded when installing the device in the system:

- The device and relief bore must be accessible for inspections and maintenance work.

valvesgo.com

7.4.1 Devices with welded or adhesive connection

NOTE

To prevent damage:

- Dismantle the actuator and diaphragm before welding or bonding the valve body.

→ Rotate the handwheel counterclockwise until it comes to a stop (OPEN position).

→ Loosen the fastening screws crosswise and remove the actuator with diaphragm from the valve body.

→ Weld or bond the valve body into the pipeline.

→ After welding or bonding the valve body, smooth the body surface (if necessary) by sanding.

→ Clean the valve body thoroughly.

→ Place the actuator together with diaphragm on the valve body.
For PP variants (diaphragm sizes 15, 20, 25), the specified body reinforcement (see "Fig. 17") is essential.

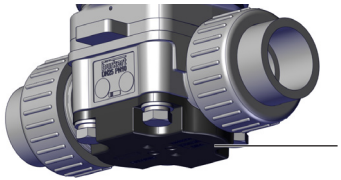

Fig. 17: Body reinforcement for PP variants (diaphragm sizes 15, 20, 25)

→ Slightly tighten the fastening screws crosswise until the diaphragm rests between the valve body and the actuator.

→ Close and open the diaphragm valve twice to position the diaphragm correctly.

→ Close the diaphragm valve again and open by about 20 %.

NOTE

Damage to the device when failing to observe tightening torque.

- Observe tightening torques.

→ Tighten each fastening screw in 3 stages (approx. 1/3, approx. 2/3, 3/3 of the tightening torque in accordance with "Tab. 3") crosswise. The diaphragm should be positioned and pressed evenly all around the actuator and valve body.

valvesgo.com

7.4.2 Tightening torques for the screws

Diaphragm size	Tightening torques [Nm][4]			
	VS, VG, PP, PVC-C, PVC-U, PVDF		VP	
	EPDM/ FKM	PTFE/ advanced PTFE/ GYLON®	EPDM/ FKM	PTFE/ advanced PTFE/ GYLON®
8	2	2.5	2	2.5
15	3.5	4	3.5	4
20	4	4.5	4	4.5
25	5	6	7	8
32	6	8	8	10
40	8	10	12	15
50	12	15	15	20
65	20	30	20	30
80	30	40	30	40
100	40	40	-	-

Tab. 3: Tightening torque depending on the diaphragm

4) A tolerance of +10 % of the respective tightening torque applies to all values.

7.5 Setting stroke limit

The stroke limit can be set optionally.

7.5.1 Setting minimum stroke limit, Type 293x, diaphragm size 8...50

A minimum stroke limit can be set for Types 2933, 2934 and 2935. This setting also serves as a closing limiter to protect the diaphragm. A hexagon nut is used to do this.

→ By turning the handwheel clockwise, the valve is moved to the closed position.

→ Loosen the screw on the handwheel (hexagon socket, width across flats 2) and remove the handwheel.

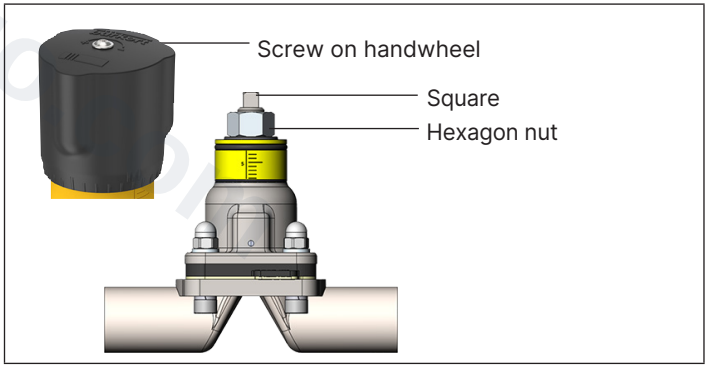

Fig. 18: Setting stroke limit, Type 293x, diaphragm size 8...50

→ Screw the hexagon nut as far as it will go.
Minimum stroke is set.

→ Mount the handwheel on the actuator. The square on the spindle and the hexagon head of the nut must be correctly aligned to the geometry of the handwheel so that they fit into each other.

NOTE

Damage to the device by incorrectly positioning the hexagon nut.

- Do not screw the hexagon nut in the area of the square.
- Only use minimum stroke limit in the 0...25 % opening stroke range.

→ Tighten the screw on the handwheel with 0.9 Nm.
If necessary, bond the screw to ensure a permanent hold.

7.5.2 Setting minimum stroke limit, Type 293x, diaphragm size 65...100

For Types 2933, 2934 and 2935, the diaphragm size 65...100 can be configured with a minimum stroke limit. This setting also serves as a closing limiter to protect the diaphragm. This is available either as a retrofit kit or as a standard version.

→ By turning the handwheel clockwise, the valve is moved to the closed position.

→ Remove the protective cover.

→ Screw the hexagon nuts down until they rest against the locking screw.

→ Refit the protective cover.

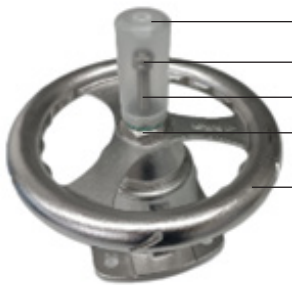

Fig. 19: Setting stroke limit, Type 293x, diaphragm size 65...100

7.5.3 Setting minimum and maximum stroke limits, Type 297x

A minimum and maximum stroke limit can be set for Types 2973, 2974 and 2975 (diaphragm sizes 15...50). The stroke limit for these types is available as an option and is not integrated as standard. An adjusting sleeve is used for this purpose.

→ By turning the handwheel clockwise, the valve is moved to the closed position.

→ Loosen the screw on the handwheel (hexagon socket, width across flats 2) and remove the handwheel.

→ Screw the adjusting sleeve clockwise until it comes to a stop. Minimum stroke is set.

→ Mount the handwheel on the actuator. The square on the spindle and the hexagon head of the adjusting sleeve must be correctly aligned to the geometry of the handwheel so that they fit into each other.

→ Move the valve to the desired maximally open position.

→ Loosen the screw on the handwheel and remove the handwheel.

→ Pull the adjusting sleeve upwards and at the same time, screw anticlockwise until it comes to a stop.
Maximum stroke is set.

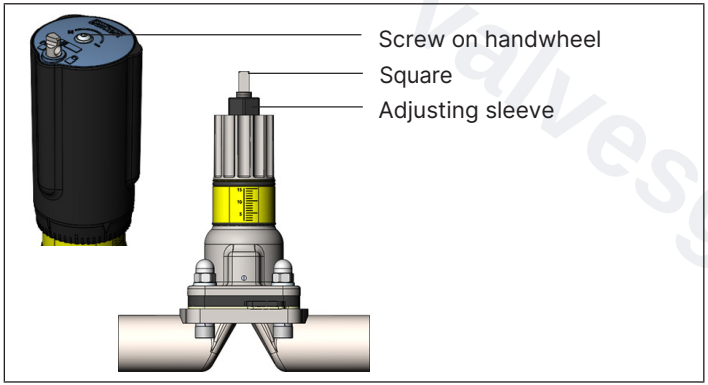

Fig. 20: Setting stroke limit, Type 297x

→ Mount the handwheel on the actuator. The square on the spindle and the hexagon head of the adjusting sleeve must be correctly aligned to the geometry of the handwheel so that they fit into each other.

→ Tighten the screw on the handwheel with 0.9 Nm.

If necessary, bond the screw to ensure a permanent hold.

7.6 Locking the handwheel, Type 293x, diaphragm size 65...100

For Types 2933, 2934 and 2935 (diaphragm size 15...100), a locking mechanism is available as an option to prevent accidental or unauthorised operation.

→ Move the manual actuator (diaphragm size 65...100) to the desired position.

→ Push the locking pin forwards into the spindle.
The manual actuator is locked.

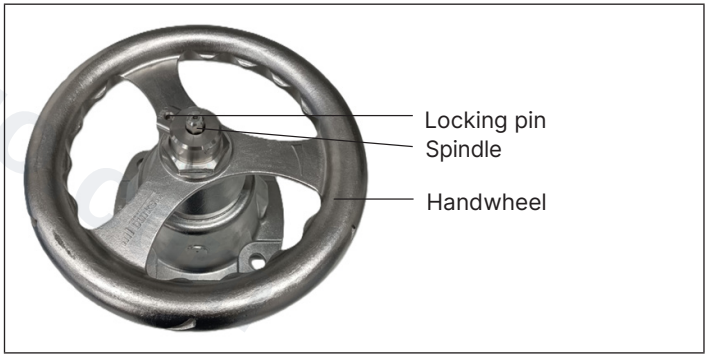

Fig. 21: Locking the handwheel, Type 293x, diaphragm size 65...100

7.7 Locking the handwheel, Type 297x, diaphragm size 8...50

For Types 2973, 2974 and 2975 (diaphragm size 15...50), a locking mechanism is available as an option to prevent accidental or unauthorised operation.

- A handwheel (diaphragm size 15...25) can be locked in 12 locking positions per revolution (every 30° corresponds to 0.15 mm of stroke).
- A handwheel (diaphragm size 32...50) can be locked in 13 locking positions per revolution (every 27° corresponds to 0.15 mm of stroke).

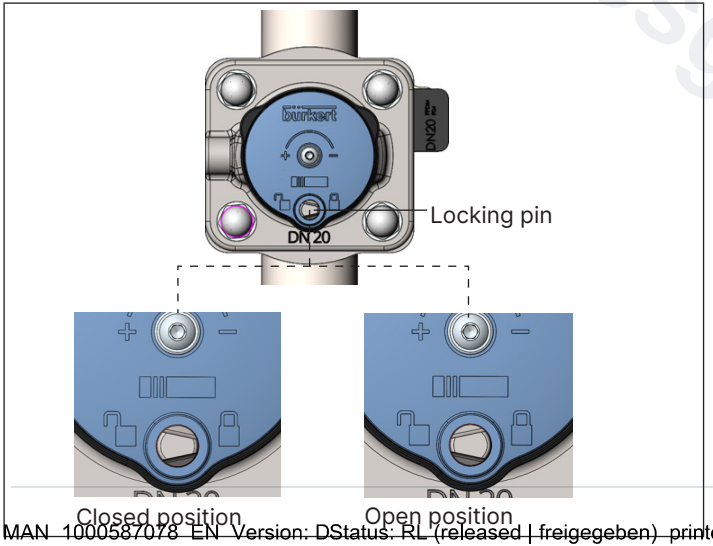

Fig. 22: Locking the handwheel

The locking pin has a bore (Ø 3.8) and can be secured against unauthorised use with a padlock (not included in scope of delivery).

→ Push the locking pin down and rotate by 180° (either clockwise or anticlockwise). It may be necessary to turn the handwheel slightly so that the locking pin reaches its end position. The locking pin must lock into its end position so that the bore is fully visible once again.

→ Insert a padlock through the bore in the locking pin and secure it.

7.8 Installing inductive proximity switch

The inductive proximity switches can be fitted to detect the upper and/or lower end positions. This requires a variant with two threaded holes in the diaphragm bonnet that correspond to the sensor. The threaded holes and proximity switches are optional and are not included as standard with the actuator.

Type	Diaphragm size	Threaded hole for proximity switch
293x, 297x	8...50	M5 × 0.5
293x	65	M8 × 1
293x	80...100	M12 × 1

The inductive proximity switch detects the position of the compressor and not the sealing position.

When installing the inductive proximity switch, the actuator with diaphragm must be mounted on the valve body.

valvesgo.com

Signal position closed:

→ With the valve closed, screw in the inductive proximity switch until it gives a signal by detecting the compressor. Fix the proximity switch in this position.

Signal position open:

→ With the valve open, screw in the inductive proximity switch until it gives a signal by detecting the compressor. Fix the proximity switch in this position.

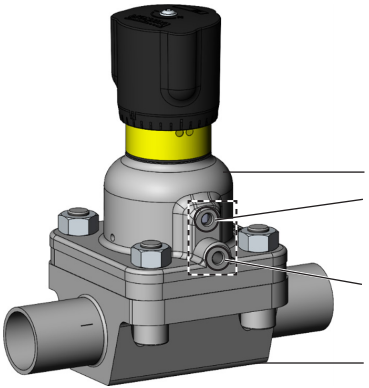

Fig. 23: Position of the holes for detecting the position of the compressor

8 Maintenance

DANGER

Risk of injury due to improper maintenance.

- Switch off the pressure before working on the device or system. Vent or empty the lines.
- Maintenance may only be performed by authorised technicians and with the appropriate tools.

Medium may leak out if the diaphragm is worn.

- Inspect relief bore for any medium leakages.
- Change the diaphragm if there is escaping medium.
- If the medium is hazardous, secure the area around the leakage to prevent risks.

8.1 Cleaning

Use commercially available cleaning agents for external cleaning.

NOTE

Avoid causing damage with cleaning agents.

- Before cleaning, check that the cleaning agents are compatible with body materials and seals.

8.2 Maintenance work

8.2.1 Actuator

When used in accordance with these operating instructions, the actuator of the diaphragm valve is maintenance-free.

valvesgo.com
English

8.2.2 Inspection intervals

→ After the first steam sterilisation, or when required, retighten the fastening screws crosswise.

→ After a maximum of 10^5 switching cycles check the diaphragm for wear.

Muddy and abrasive media require correspondingly shorter inspection intervals.

8.2.3 Diaphragm

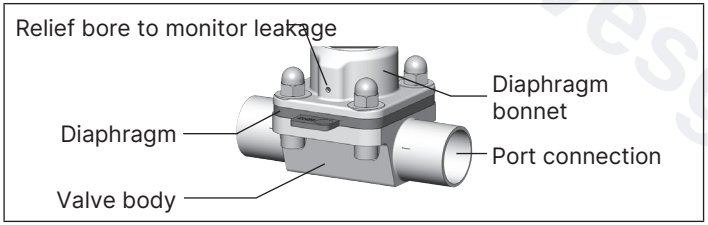

Fig. 24: Relief bore to monitor leakage

The following factors influence the service life of the diaphragm:

- Diaphragm material, medium, medium pressure, medium temperature and closing force

→ Replace the diaphragm if there are leaks.

→ Conduct regular inspections of the relief bore.

A bulging PTFE diaphragm may reduce the flow rate.

8.3 Replacing the diaphragm

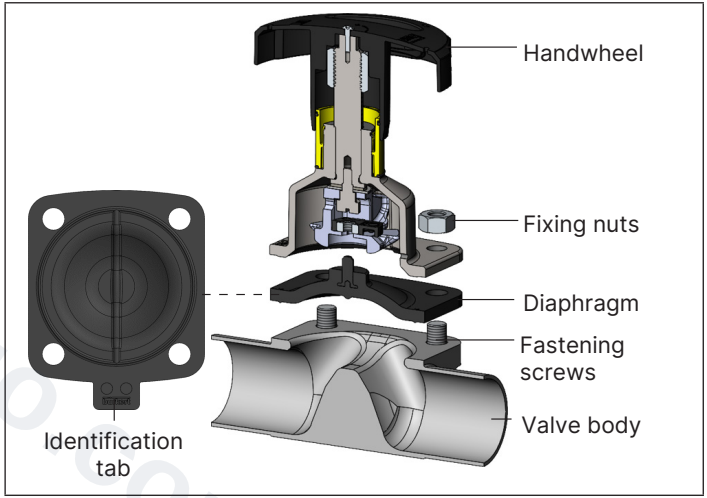

Fig. 25: Replacing the diaphragm

The diaphragm is attached in different ways:

Diaphragm size	Fastening types for diaphragms	
	PTFE/advanced PTFE	EPDM/FKM/GYLON®
8	Buttoned	
15	Bayonet catch	
20		
25	Bayonet catch	Threaded connection
32		
40		
50		
65		
80		
100		

Tab. 4: Fastening types for diaphragms

→ Clamp the valve body in a collet (only for valves which have not yet been installed).

→ Rotate the handwheel counterclockwise until it comes to a stop (OPEN position).

→ Loosen the fastening screws crosswise and remove the actuator with diaphragm from the valve body.

→ Rotate the handwheel clockwise until it comes to a stop (CLOSED position).

→ Unbutton or unscrew the old diaphragm. When fastening with a bayonet catch, loosen the diaphragm by rotating it 90°. For diaphragm sizes 25...100, refer to the relevant chapter "8.3.1".

NOTE

Damage to the diaphragm with threaded connection due to energised pin.

- First screw on the diaphragm hand-tight, then loosen it by one-half turn anticlockwise.

→ Install a new diaphragm in the actuator (see "Tab. 4").

→ Rotate the handwheel counterclockwise until it comes to a stop (OPEN position).

→ Align the diaphragm.
Identification tab is at a 90-degree angle to the flow direction.

→ Place the actuator together with diaphragm on the valve body.
For PP variants (diaphragm sizes 15, 20, 25), the specified body reinforcement is essential.

→ Slightly tighten the fastening screws crosswise.

→ Close and open the diaphragm valve twice to position the diaphragm correctly.

→ Close the diaphragm valve again and open by about 20%.

NOTE

Damage to the device when failing to observe tightening torque.

- Observe tightening torques.

→ Tighten each fastening screw in 3 stages (approx. 1/3, approx. 2/3, 3/3 of the tightening torque) crosswise. The diaphragm should be positioned and pressed evenly around the actuator and valve body.

valvesgo.com

Observe tightening torques in accordance with the tables in chapter "7.4.2".

8.3.1 Switch between PTFE and EPDM diaphragm

1. Changing the diaphragm for diaphragm size 8

→ Unbutton the PTFE diaphragm and button on a new EPDM diaphragm (or vice versa).

2. Changing the diaphragm for diaphragm size 15 and 20

→ Loosen the PTFE diaphragm bayonet and insert a new EPDM diaphragm (or vice versa).

3. Changing the diaphragm for diaphragm size 25...100

Changing the PTFE diaphragm to an EPDM diaphragm:

→ Loosen the PTFE diaphragm by turning it 90°.

→ Place the insert into the compressor.

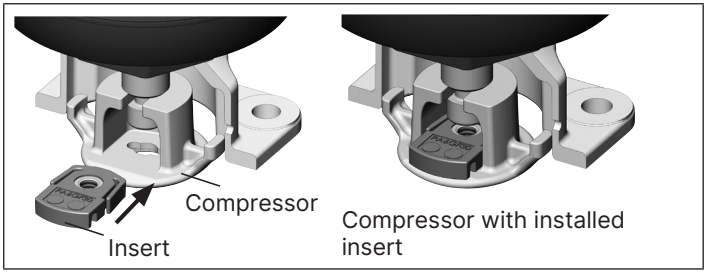

Fig. 26: Placing insert into compressor

→ Insert and screw in the EPDM diaphragm.

NOTE

Damage to the diaphragm with threaded connection due to energised pin.

- First screw on the diaphragm hand-tight, then loosen it by rotating it anticlockwise with one half-turn.

Changing the EPDM diaphragm to a PTFE diaphragm:

→ Unscrew the EPDM diaphragm.

→ Remove the insert from the compressor.

NOTE

For diaphragms with a bayonet catch:

If the insert is not removed, a diaphragm with a bayonet catch can still be fitted. This can severely damage the diaphragm and valve body.

→ Insert the PTFE diaphragm and fix it by turning it 90°.

9 Spare parts

CAUTION

Risk of injury and/or damage due to incorrect parts.

Incorrect accessories and unsuitable spare parts may cause injuries and damage the device and the surrounding area.

- Use only original accessories and original spare parts from Bürkert.

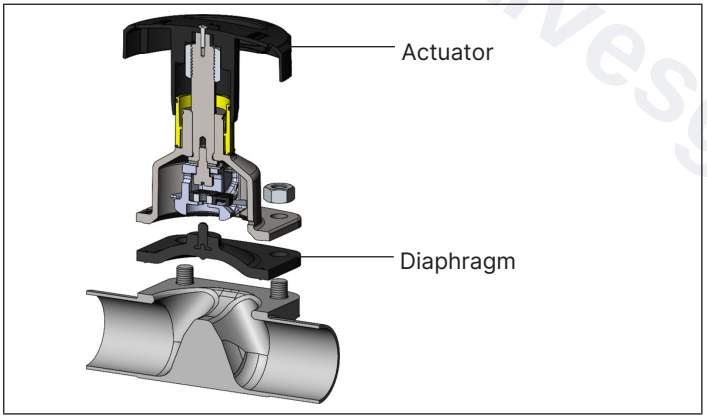

Fig. 27: Spare parts

The following are available as spare parts for manually activated diaphragm valves:

- Complete actuator
- Diaphragm

9.1 Ordering spare parts

9.1.1 Ordering actuator

→ Open country.burkert.com.

→ Enter the article number from the type label in the search bar.

→ Select the required spare part and add it to the shopping basket.

→ Conclude order.

9.1.2 Ordering diaphragm

The diaphragm can be ordered according to the table below. It is labelled with a material code that specifies it. The material code is located on the identification tab or, in the case of two-part diaphragms, on the tab of the backing diaphragm and the diaphragm shield (see "Fig. 25"). The material code may differ for older materials. Diaphragm mountings: see "Tab. 4".

valvesgo.com

Diaphragm size	EPDM (AD*)		FKM (FF*)		PTFE/EPDM (EA*)		Advanced PTFE/EPDM (EU*)		Laminate made from GYLON® and EPDM (ER*)	
	Article number	Material code	Article number	Material code	Article number	Material code	Article number	Material code	Article number	Material code
8	688 421	EPDM E04	677 684	FKM F01	20093068	PTFE L11	20093078	PTFE L12	693 175	PTFE L08
15	693 163	EPDM E04	693 164	FKM F01	20093069	EPDM E04/ PTFE P05	20093079	EPDM E04/PTFE P06	693 176	PTFE L08
20	693 166	EPDM E04	693 167	FKM F01	20093070	EPDM E04/ PTFE P05	20093080	EPDM E04/PTFE P06	693 177	PTFE L08
25	688 424	EPDM E04	677 687	FKM F01	20093071	EPDM E04/ PTFE P05	20093082	EPDM E04/PTFE P06	693 178	PTFE L08
32	688 425	EPDM E04	677 688	FKM F01	20093072	EPDM E04/ PTFE P05	20093083	EPDM E04/PTFE P06	693 179	PTFE L08
40	688 426	EPDM E04	677 689	FKM F01	20093073	EPDM E04/ PTFE P05	20093084	EPDM E04/PTFE P06	693 180	PTFE L08
50	688 427	EPDM E04	677 690	FKM F01	20093074	EPDM E04/ PTFE P05	20093087	EPDM E04/PTFE P06	693 181	PTFE L08
65	688 428	EPDM E04	677 691	FKM F01	20093075	EPDM E04/ PTFE P05	20093088	EPDM E04/PTFE P06	586 616	PTFE L08
80	688 429	EPDM E04	677 692	FKM F01	20093076	EPDM E04/ PTFE P05	20093091	EPDM E04/PTFE P06	586 617	PTFE L08
100	688 430	EPDM E04	677 693	FKM F01	20093077	EPDM E04/ PTFE P05	20093092	EPDM E04/PTFE P06	-	-

Tab. 5: Order table for diaphragms

** Bürkert SAP code*

You can find further information on spare parts on the data sheets for the diaphragm valves. The data sheets can be found on the internet at: country.burkert.com.

9.1.3 Ordering spare parts in eShop

→ Open Bürkert eShop on the internet.

→ Log in or register.

→ Find spare parts via the article number. It can be seen on the type label on the device.

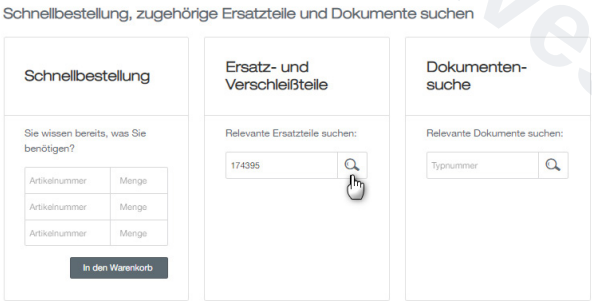

→ Put spare parts in the basket and complete order.

If you cannot find spare parts, contact your Bürkert service employee.

10 Transportation, storage, disposal

CAUTION

Risk of injury due to heavy device.

During transportation or installation work, a heavy device may fall down and cause injuries.

- Heavy equipment must only be transported, assembled and disassembled with the help of a second person.
- Use suitable tools.

NOTE

Damage in transit due to inadequately protected devices.

- Protect the device against moisture and dirt in shock-resistant packaging during transportation.
- Observe permitted storage temperature.

Incorrect storage may damage the device.

- Store the device in a dry and dust-free location.
- Storage temperature: −40...+55 °C.

Environmentally friendly disposal

- Follow national regulations regarding disposal and the environment.
- Collect electrical and electronic devices separately and dispose of them as special waste.

Further information is at country.burkert.com.

valvesgo.com

valvesgo.com

bürkert
FLUID CONTROL SYSTEMS

valvesgo.com

country.burkert.com

valvesgo.com