bürkert
FLUID CONTROL SYSTEMS









T-diaphragm valve with manually operated actuator (basic)

- Valve body and diaphragm are available in different materials and variants
- Product wetted surfaces in Ra ≤ 0.38 µm...1.6 µm (optionally electropolished)
- Available in all common connection sizes and variants

Product variants described in the data sheet may differ from the product presentation and description.

Can be combined with



Type SV02 ▸
Diaphragms



Type 2974 ▸
T-diaphragm valve with manually operated actuator (FullFunction)



Type 2933 ▸
2/2-way diaphragm valve with manually operated actuator (basic)



Type 2935 ▸
Tank bottom diaphragm valve with manually operated actuator (basic)



Type 2103 ▸
2/2-way diaphragm valve with pneumatic stainless steel actuator (Type ELEMENT) for decentralised automation



Type 8098 ▸
FLOWave SAW flowmeter

Type description

The Type 2934 manually operated diaphragm valve consists of a manually operated actuator, a diaphragm and a T-valve body. The manual actuator with plastic or stainless steel handwheel is available with a diaphragm bonnet made of stainless steel or plastic and ensures use in hygienic or aggressive ambient conditions. The flow-optimised valve body with minimum dead space enables high flow values and a wide range of possible applications. The valve body and the diaphragms are available in all common materials and variants. The actuator has a compact, autoclavable design and is compatible with all other Bürkert diaphragm valves. An explosion-proof ATEX/IECEx device variant is available. The manual actuator is equipped with an integrated visual position indicator, a reproducible stroke scale and an adjustable closing limiter. The manual actuator can optionally be equipped with sensors for position feedback.

DTS 1000584283 EN Version: - Status: RL (released | freigegeben | valide) printed: 28.10.2026

© Christian Bürkert GmbH & Co. KG, Subject to alteration

Visit product website ▸

valvesgo.com

Table of contents

1. General technical data 3

2. Approvals and conformities 4

2.1. General notes 4
2.2. Conformity 4
2.3. Standards 4
2.4. Explosion protection 4
2.5. Foods and beverages/Hygiene 5
2.6. Others 5

3. Materials 6

3.1. Bürkert resistApp 6
3.2. Material specifications 6
3.3. Example of available diaphragm materials 7

4. Dimensions 8

4.1. Manual actuator 8
Diaphragm size 8...25 8
Diaphragm size 40...50 9
Diaphragm size 65...100 10
4.2. T-body with welded connection 11
4.3. T-body with clamp connection 16

5. Performance specifications 17

5.1. Medium pressure 17

6. Ordering information 18

6.1. Bürkert eShop 18
6.2. Bürkert product filter 18
6.3. Bürkert Product Enquiry Form 18
6.4. Ordering chart accessories 18

DTS 1000584283 EN Version: - Status: RL (released | freigegeben | valide) printed: 28.10.2026

valvesgo.com

valvesgo.com

1. General technical data

Product properties	
Dimensions	Further information can be found in chapter "4. Dimensions" on page 8.
Material [1.]	
Block body (VH) [1.]	Stainless steel block material 1.4435 according to DIN EN 10088 and 316L according to ASTM A479 / A479M
Block body (VI) [1.]	Stainless steel block material 1.4435 according to DIN EN 10088 and 316L according to ASME BPE (Table MM- 2.1.1, Ed. 2024) BN2 available on request
Diaphragm	EPDM (AD) [1.], PTFE/EPDM (EA) [1.], advanced PTFE/EPDM (EU) [1.], laminate of GYLON® and EPDM (ER) [1.]
Actuator (diaphragm bonnet/handwheel)	Stainless steel/PPS, PPS/PPS, stainless steel/stainless steel
Diaphragm size	8...100
Standard surface quality [2.]	
Block body (VH/VI) [1.]	Internally electrically polished: Ra ≤ 0.38 µm (NO17) [1.] (ASME BPE SF4/DIN HE4) (externally: Ra ≤ 1.6 µm) Internally mechanically polished: Ra ≤ 0.5 µm (NO14) [1.] (ASME BPE SF1) (externally: Ra ≤ 1.6 µm)
Medium data	
Operating medium	Neutral gases and liquids, highly purified, sterile, aggressive or abrasive mediums (see **resistance chart** ▶)
Medium temperature	
EPDM (AD) [1.]	- 10...+ 143 °C (steam sterilisation + 150 °C for 60 min)
PTFE/EPDM (EA) [1.]	- 10...+ 130 °C (steam sterilisation + 140 °C for 60 min)
Advanced PTFE/EPDM (EU) [1.]	- 5...+ 143 °C (steam sterilisation + 150 °C for 60 min)
Laminate of GYLON® and EPDM (ER) [1.]	- 5...+ 130 °C (steam sterilisation + 140 °C for 60 min)
Product connections	
Port connection [2.]	
Nominal diameter	DN 06...DN 100 (⅛"...4")
Stainless steel body [2.]	
Welded connection [2.]	DIN EN ISO 1127 / ISO 4200 / DIN 11866 series B DIN 11850 - 2 / DIN 11866 series A / DIN EN 10357 series A ASME BPE / DIN 11866 series C
Clamp connection [2.]	DIN 32676 series A (DIN pipe) DIN 32676 series B (ISO pipe) ASME BPE
Environment and installation	
Installation position	See **operating instructions Type 2934** ▶
Ambient temperature: actuator (diaphragm bonnet/handwheel)	
Stainless steel/PPS, PPS/PPS, stainless steel/stainless steel	- 10...+ 130 °C (short-term up to + 150 °C), autoclavable

1.) This information is part of the product key (see "6.3. Bürkert Product Enquiry Form" on page 18).
2.) Further variants are available on request.

DTS 1000584283 EN Version: - Status: RL (released | freigegeben | valide) printed: 28.10.2026

valvesgo.com

2. Approvals and conformities

2.1. General notes

- The approvals and conformities listed below must be stated when making enquiries. This is the only way to ensure that the product complies with all required specifications.
- Not all available variants can be supplied with the below mentioned approvals or conformities.
- Further information can be found in the manufacturer's declarations for our diaphragm valves on our website, see **Type 2934** ▶.

2.2. Conformity

In accordance with the Declaration of Conformity, the product is compliant with the EU Directives.

2.3. Standards

The applied standards which are used to demonstrate compliance with the EU Directives are listed in the EU-Type Examination Certificate and/or the EU Declaration of Conformity.

2.4. Explosion protection

<table>
<tr><th>Approval</th><th>Description</th></tr>
<tr><td></td><td>
Explosion protection (valid for the variable code PX51)
As a category 2 device suitable for zone 1/21 and zone 2/22.

ATEX:
EPS 18 ATEX 2 008 X
II 2G Ex h IIC T4...T2 Gb
II 2D Ex h IIIC T135 °C...T300 °C Db

IECEx:
IECEx EPS 18.0007X
Ex h IIC T4...T2 Gb
Ex h IIIC T135 °C...T300 °C Db

<table>
<tr><td>Temperature class</td><td>T2</td><td>T3</td><td>T4</td></tr>
<tr><td>Maximum surface temperature</td><td>+ 300 °C</td><td>+ 200 °C</td><td>+ 135 °C</td></tr>
<tr><td>Ambient temperature</td><td>- 40...+ 130 °C</td><td>- 40...+ 130 °C</td><td>- 40...+ 100 °C</td></tr>
<tr><td>Maximum medium temperature</td><td>+ 285 °C</td><td>+ 185 °C</td><td>+ 125 °C</td></tr>
</table>
Note: The ambient and medium temperature range may be limited by non-ex-relevant specifications. Observe the operating instructions.
</td></tr>
</table>

DTS 1000584283 EN Version: - Status: RL (released | freigegeben | valide) printed: 28.10.2026

valvesgo.com

2.5. Foods and beverages/Hygiene

Conformity	Description
	**3-A Sanitary Standards Inc. (valid for the variable code PE05)** The products comply with 3-A Sanitary Standards Inc (3-A SSI) as per certificate.
FDA	**FDA – Code of Federal Regulations** The diaphragms made of EPDM (AD), PTFE/EPDM (EA), advanced PTFE/EPDM (EU) and laminate of GYLON® and EPDM (ER) comply with the Code of Federal Regulations published by the FDA (Food and Drug Administration, USA).
USP	**United States Pharmacopeial Convention (USP)** The diaphragms made of EPDM (AD), PTFE/EPDM (EA), advanced PTFE/EPDM (EU) and laminate of GYLON® and EPDM (ER) are tested according to USP Class VI.
	**EC Regulation 1935/2004 of the European Parliament and of the Council** The diaphragms made of EPDM (AD), PTFE/EPDM (EA), advanced PTFE/EPDM (EU) and laminate of GYLON® and EPDM (ER) are suitable for use with food and beverages (according to EC Regulation 1935/2004/EC).

2.6. Others

Approval	Description
TA Luft	**Technical instruction on air quality control (valid for the variable code PM01)**

valvesgo.com

DTS 1000584283 EN Version: - Status: RL (released | freigegeben | valide) printed: 28.10.2026

valvesgo.com

3. Materials

3.1. Bürkert resistApp

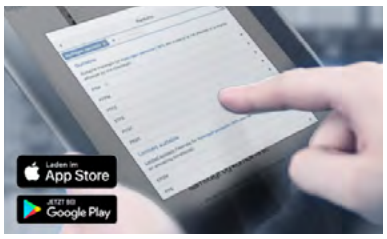

Bürkert resistApp – Chemical resistance chart

You want to ensure the reliability and durability of the materials in your individual application case? Verify your combination of media and materials on our website or in our resistApp.

Start chemical resistance check

3.2. Material specifications

Note:
Your product variant may differ from this illustration depending on the body and interface options.

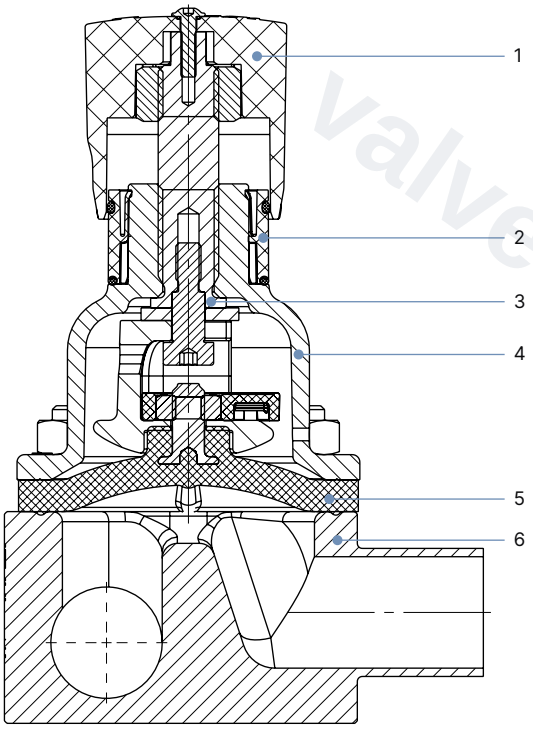

No.	Element	Material
1	Handwheel	Polyphenylene sulphide (PPS), stainless steel 1.4308
2	Visual position indicator	Polyamide (PA) Stainless steel 1.4305
3	Valve spindle	Stainless steel 1.4305
4	Diaphragm bonnet	Stainless steel 1.4308, polyphenylene sulphide (PPS)
5	Diaphragm	EPDM (AD), PTFE/EPDM (EA), advanced PTFE/EPDM (EU), laminate of GYLON® and EPDM (ER)
6	Valve body	See "1. General technical data" on page 3.

valvesgo.com

DTS 1000584283 EN Version: - Status: RL (released | freigegeben | valide) printed: 28.10.2026

valvesgo.com

3.3. Example of available diaphragm materials

The diaphragms have been developed to meet the unique challenges of hygienic and sterile requirements. Bürkert offers diaphragms with precise material composition and high accuracy. Bürkert diaphragms are available in a wide range of materials which have been tested and proven in applications in the food and beverage, biotechnology, pharmaceutical and cosmetics industries. The diaphragms are tested during development and production to ensure reliability under difficult process conditions.



- EPDM (AD)
- PTFE/EPDM (EA)
- Advanced PTFE/EPDM (EU)
- Laminate of GYLON® and EPDM (ER)

Further information can be found in our flyer “Diaphragm competence for hygienic applications” on our **website** ▶.

valvesgo.com

DTS 1000584283 EN Version: - Status: RL (released | freigegeben | valide) printed: 28.10.2026

valvesgo.com

4. Dimensions

4.1. Manual actuator

Diaphragm size 8...25

Note:
Dimensions in mm, unless otherwise stated

Position open	Position closed
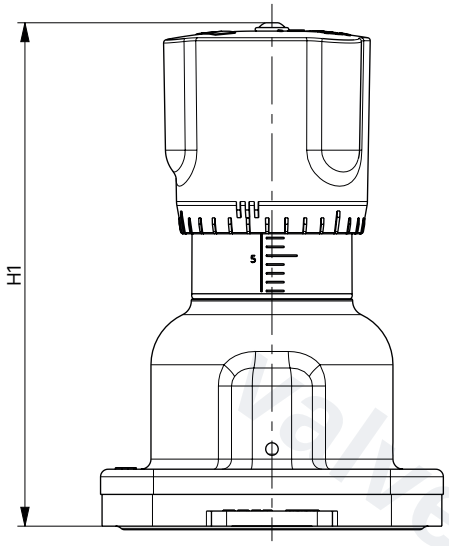	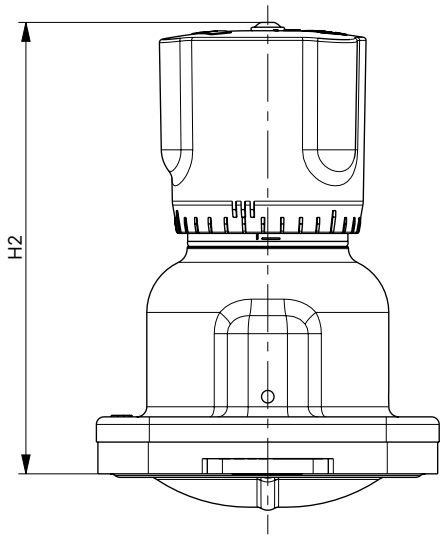

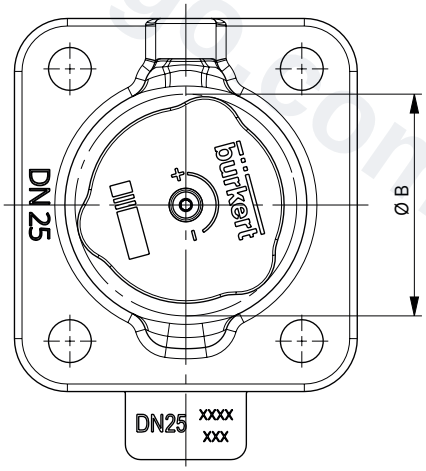

Diaphragm size	H1	H2	Ø B
8	54	49	35
15	84	78	45
20	95	86	45
25	101	90	45

DTS 1000584283 EN Version: - Status: RL (released | freigegeben | valide) printed: 28.10.2026

valvesgo.com

DTS 1000584283 EN Version: - Status: RL (released | freigegeben | valide) printed: 28.10.2026

Diaphragm size 40...50

Note:
Dimensions in mm, unless otherwise stated

Position open	Position closed
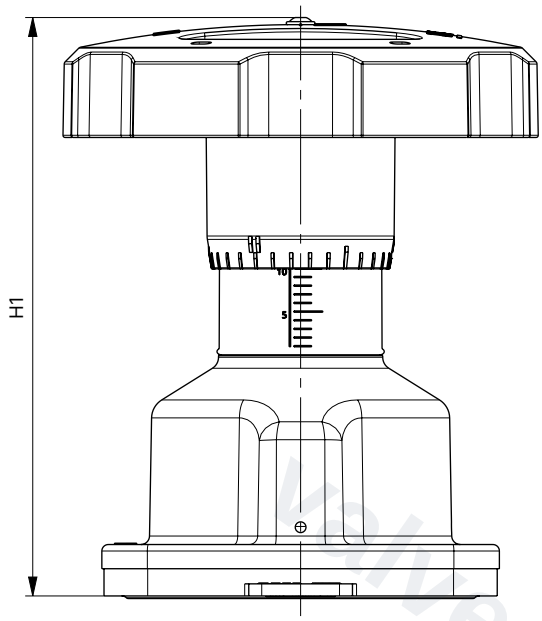	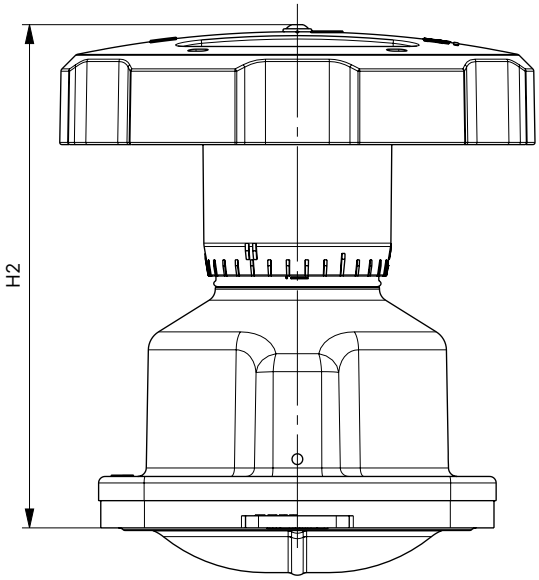

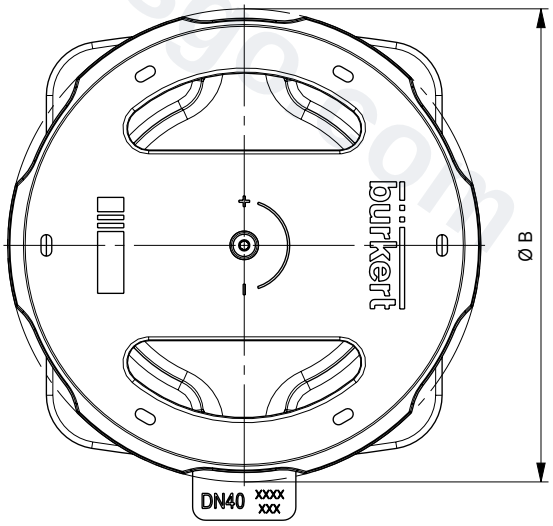

Diaphragm size	H1	H2	Ø B
40	134	116	110
50	149	125	110

valvesgo.com

Diaphragm size 65...100

Note:
Dimensions in mm, unless otherwise stated

Position open	Position closed
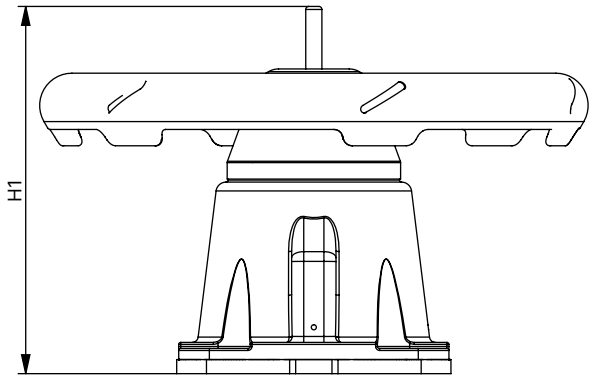	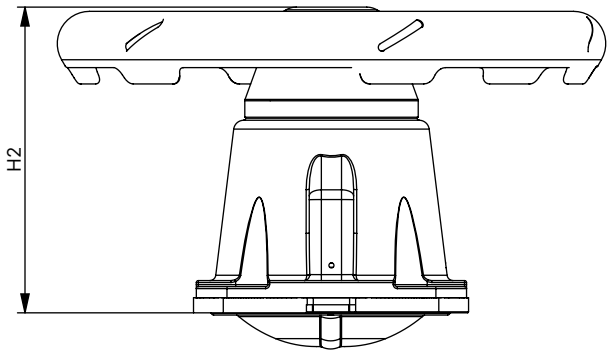

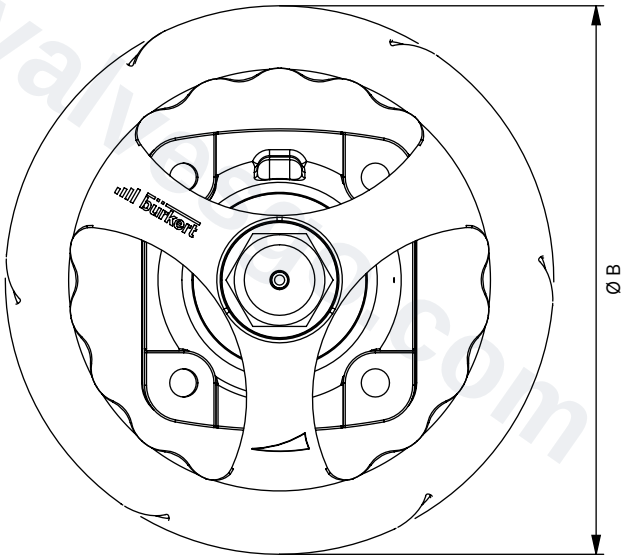

Diaphragm size	H1	H2	Ø B
65	182	152	272
80	205	163	272
100	207	161	272

DTS 1000584283 EN Version: - Status: RL (released | freigegeben | valide) printed: 28.10.2026

valvesgo.com

4.2. T-body with welded connection

Note:
Dimensions in mm, unless otherwise stated

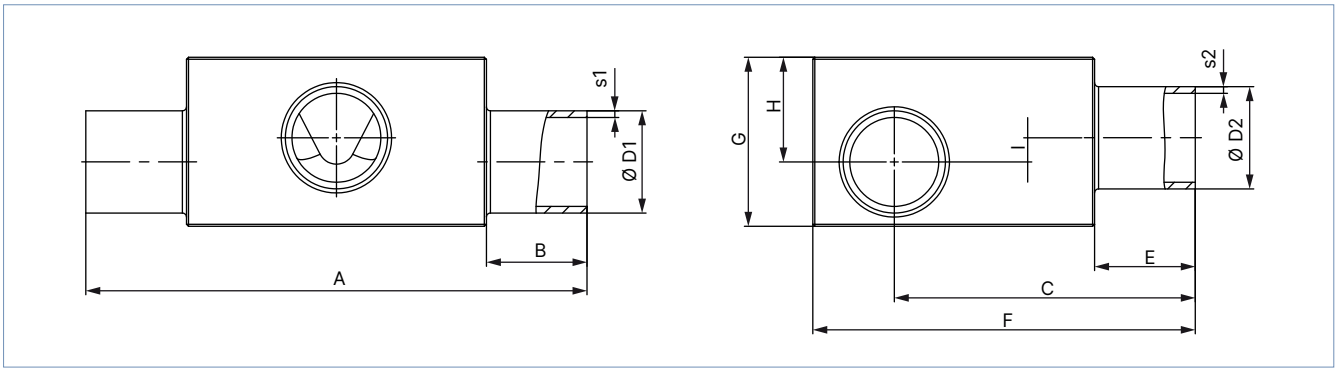

Diaphragm size	Port 1 – Port 2 DN	Ø D1	s1	Ø D2	s2	A	B	C	E	F	G	H	I	Product key [1.] (Port 1 – Port 2)
DIN EN ISO 1127 / ISO 4200 / DIN 11866 series B														
8	8...8	13.5	1.6	13.5	1.6	78.0	20	47.2	20	60	24	15	5.0	SA40-SA40
	10...8	17.2		13.5		78.0		49.00		60	29	18	8.0	SA41-SA40
	10...10	17.2		17.2		78.0		49.00		60	29	18	8.0	SA41-SA41
	15...8	21.3		13.5		78.0		51.1		64	34	21	11.0	SA42-SA40
	15...10	21.3		17.2		78.0		51.1		64	34	21	11.0	SA42-SA41
	20...8	26.9		13.5		88.0	25	53.9		70	38	23	13.0	SA43-SA40
	20...10	26.9		17.2		88.0		53.9		70	38	23	13.0	SA43-SA41
	25...8	33.7	2.0	13.5		88.0		53.9		76	45	26	16.0	SA44-SA40
	25...10	33.7		17.2		88.0		53.9		76	45	26	16.0	SA44-SA41
	32...8	42.4		13.5		88.0		60.50		84	52	29	19.0	SA45-SA40
	32...10	42.4		17.2		88.0		61.20		84	52	29	19.0	SA45-SA41
	40...8	48.3		13.5		88.0		64.2		90	57	31	21.0	SA46-SA40
	40...10	48.3		17.2		88.0		64.2		90	57	31	20.0	SA46-SA41
	50...8	60.3		13.5		98.0	30	70.2		102	66	34	24.0	SA47-SA40
	50...10	60.3		17.2		98.0		70.2		102	66	34	24.0	SA47-SA41
	65...8	76.1		13.5		98.0		78.1		118	80	40	30.0	SA48-SA40
	80...8	88.9	2.3	13.5		98.0		84.2		131	92	46	36.0	SA49-SA40
	80...10	88.9		17.2		98.0		84.2		131	92	46	35.0	SA49-SA41

DTS 1000584283 EN Version: - Status: RL (released | freigegeben | valide) printed: 28.10.2026

valvesgo.com

Diaphragm size	Port 1 – Port 2 DN	ØD1	s1	ØD2	s2	A	B	C	E	F	G	H	I	Product key [1] (Port 1 – Port 2)
15	8...8	13.5	1.6	13.5	1.6	93.0	20	52.05	20	70	27	17	4.5	SA40-SA40
	10...8	17.2		13.5		93.0		53.9		70	31	18	4.5	SA41-SA40
	10...10	17.2		17.2		93.0		54.9		70	28	16	2.5	SA41-SA41
	15...8	21.3		13.5		93.0		57		71	34.5	21	7.5	SA42-SA40
	15...15	21.3		21.3		93.0		56		71	35	21	6.5	SA42-SA42
	20...8	26.9		13.5		103.0	25	59.8		76	41	25	11.5	SA43-SA40
	20...10	26.9		17.2		103.0		59.8		78	42	25	11.5	SA43-SA41
	20...15	26.9		21.3		103.0		59.8		78	42	25	11.5	SA43-SA42
	25...10	33.7	2.0	17.2		103.0		63		83	48	28	14.5	SA44-SA41
	25...15	33.7		21.3		103.0		62.8		83	47	28	14.5	SA44-SA42
	32...8	42.4		13.5		103.0		67.1		91	56	32	18.5	SA45-SA40
	32...10	42.4		17.2		103.0		67.1		91	56	32	18.5	SA45-SA41
	32...15	42.4		21.3		103.0		67.1		91	56	32	18.5	SA45-SA42
	40...8	48.3		13.5		103.0		70.1		97	63	35	21.5	SA46-SA40
	40...10	48.3		17.2		103.0		70.1		97	63	35	21.5	SA46-SA41
	40...15	48.3		21.3		103.0		70.1		97	63	35	21.5	SA46-SA42
	50...8	60.3		13.5		113.0	30	76.1		109	72	38	24.5	SA47-SA40
	50...10	60.3		17.2		113.0		76.1		109	72	38	24.5	SA47-SA41
	50...15	60.3		21.3		113.0		76.1		109	72	38	24.5	SA47-SA42
	65...8	76.1		13.5		113.0		84		125	85	44	30.5	SA48-SA40
	65...15	76.1		21.3		113.0		84		125	85	44	30.5	SA48-SA42
	80...8	88.9	2.3	13.5		113.0		90.1		140	99	52	38.5	SA49-SA40
	80...10	88.9		17.2		113.0		90.1		137	94	47	33.5	SA49-SA41
	80...15	88.9		21.3		113.0		90.1		137	94	47	33.5	SA49-SA42
	100...15	114.3		21.3		113.0		102.8		163	120	60	46.5	SA39-SA42
20	20...20	26.9	1.6	26.9	1.6	114.0	25	70.3	25	87	40	24	6.0	SA43-SA43
	25...20	33.7	2.0	26.9		114.0		73.3		94	48	28	10.0	SA44-SA43
	32...20	42.4		26.9		114.0		78.6		102	57	33	15.0	SA45-SA43
	40...20	48.3		26.9		114.0		80.6		108	63	35	17.0	SA46-SA43
	50...20	60.3		26.9		124.0	30	87		120.8	72	39	21.0	SA47-SA43
	65...20	76.1		26.9		124.0		94.5		136	86	45	27.0	SA48-SA43
	80...20	88.9	2.3	26.9		124.0		100.6		148	94	47	29.0	SA49-SA43
	100...20	114.3		26.9		124.0		113.3		173	120	60	42.0	SA39-SA43
25	25...25	33.7	2.0	33.7	2.0	124.5	25	78.6	25	98	53	33	13.0	SA44-SA44
	32...25	42.4		33.7		124.5		82.9		107	62	38	18.0	SA45-SA44
	40...25	48.3		33.7		124.5		85.9		114	69	41	21.0	SA46-SA44
	50...25	60.3		33.7		134.5	30	81.9		125	78	45	25.0	SA47-SA44
	65...25	76.1		33.7		134.5		99.8		142	94	52	32.0	SA48-SA44
	80...25	88.9	2.3	33.7		134.5		105.9		153	101	54	34.0	SA49-SA44
	150...25	168.3	2.6	33.7		134.5		145.3		232	174	87	67.0	SA69-SA44
40	32...32	42.4	2.0	42.4	2.0	152.0	25	98.00	25	122	62	38	9.4	SA45-SA45
	40...32	48.3		42.4		152.0		100		128	68	41	12.4	SA46-SA45
	40...40	48.3		48.3		152.0		100		128	68	41	12.4	SA46-SA46
	50...32	60.3		42.4		162.0	30	106		140	82	48	19.4	SA47-SA45
	50...40	60.3		48.3		162.0		106		140	82	48	19.4	SA47-SA46
	65...40	76.1		48.3		162.0		113.9		155	97	55	26.4	SA48-SA46
	80...32	88.9	2.3	42.4		162.0		120		168	108	60	31.4	SA49-SA45
	80...40	88.9		48.3		162.0		120		168	108	60	31.4	SA49-SA46
	100...32	114.3		42.4		162.0		132.7		193	129	68	39.4	SA39-SA45
	100...40	114.3		48.3		162.0		132.7		193	129	68	39.4	SA39-SA46

DTS 1000584283 EN Version: - Status: RL (released | freigegeben | valide) printed: 28.10.2026

valvesgo.com

valvesgo.com

Diaphragm size	Port 1 – Port 2 DN	ØD1	s1	ØD2	s2	A	B	C	E	F	G	H	I	Product key [1] (Port 1 – Port 2)
50	50...50	60.3	2.0	60.3	2.0	188.0	30	120.2	30	154	82	48	12.5	SA47-SA47
	65...50	76.1		60.3		188.0		128.1		170	100	56	20.5	SA48-SA47
	80...50	88.9	2.3	60.3		188.0		134.2		183	110	61	25.5	SA49-SA47
	100...50	114.3		60.3		188.0		146.9		208	131	70	34.5	SA39-SA47
	150...50	168.3	2.6	60.3		188.0		173.6		261	176	88	52.5	SA69-SA47
65	65...65	76.1	2.0	76.1	2.0	210.0	30	144.4	30	186	97	55	12.9	SA48-SA48
	80...65	88.9	2.3	76.1		210.0		148.7		197	111	63	20.5	SA49-SA48
	100...65	114.3		76.1		210.0		161.4		222	135	74	31.5	SA39-SA48
80	80...80	88.9	2.3	88.9	2.3	255.0	30	163.1	30	212	119	71	20.0	SA49-SA49
	100...80	114.3		88.9		255.0		177.8		239	144	83	32.0	SA39-SA49
100	100	114.3	2.3	114.3	2.3	290.0	30	209.1	30	270	133	72	8.5	SA39-SA39
DIN 11850 - 2 / DIN 11866 series A / DIN EN 10357 series A														
8	10...10	13.0	1.5	13.0	1.5	78.0	20	47.0	20	60	24	15	5.0	SD40-SD40
	20...10	23.0		13.0		88.0	25	52.0		66	36	22	12.0	SD43-SD40
15	15...15	19.0	1.5	19.0	1.5	93.0	20	55.9	20	70	33	20	6.5	SD42-SD42
	20...15	23.0		19.0		103.0		57.9		72	37	22.5	9	SD43-SD42
	25...15	29.0		19.0		103.0	25	60.9		78	43	26	12.5	SD44-SD42
	32...15	35.0		19.0		103.0		63.9		84	49	29	15.5	SD45-SD42
	40...15	41.0		19.0		103.0		66.9		91	56	31	17.5	SD46-SD42
	50...15	53.0		19.0		113.0	30	72.9		102	65	36	22.5	SD47-SD42
20	20...20	23.0	1.5	23.0	1.5	114.0	25	68.7	25	85	36	21	–	SD43-SD43
	32...20	35.0		23.0		114.0		74.4		95	50	29	11.0	SD45-SD43
	40...20	41.0		23.0		114.0		77.4		101	56	32	14.0	SD46-SD43
25	25...25	29.0	1.5	29.0	1.5	124.5	25	76.7	25	98	48	30	10.0	SD44-SD44
	40...25	41.0		29.0		124.5		82.7		106	61	38	18.0	SD46-SD44
	50...25	53.0		29.0		134.5	30	88.7		120	73	44	24.0	SD47-SD44
40	32...32	35.0	1.5	35.0	1.5	152.0	25	95	25	119	52	32	9	SD45-SD45
	40...40	41.0		41.0		152.0		97.3		121	62	37	8.4	SD46-SD46
	50...40	53.0		41.0		162.0	30	102.8		133	75	45	16.4	SD47-SD46
50	50...50	53.0	1.5	53.0	1.5	188.0	30	117.0	30	147	74	44	8.5	SD47-SD47
65	65...65	70.0	2.0	70.0	2.0	210.0	30	142.0	30	179	89	52	14.0	SD48-SD48
	80...65	85.0		70.0		210.0		149.5		194	104	59.5	21.5	SD49-SD48
	100...65	104.0		70.0		210.0		–		–	–	–	–	SD50-SD48
80	80...80	85.0	2.0	85.0	2.0	255.0	30	45.0	30	208	112	67	22.0	SD49-SD49
	100...80	104.0		85.0		250.0		172.1		227	132	77	32.0	SD50-SD49
100	100	104.0	2.0	104.0	2.0	293.0	30	211.5	30	267	125	70	11.0	SD50-SD50
ASME BPE / DIN 11866 series C														
8	20...8	19.05	1.65	6.35	0.89	88.0	25	49.90	20	61	32	20	10.0	SA93-SA90
	25...10	25.40		9.53		88.0	25	53.00		68	38	23	13.0	SODF-SA91
	40...8	38.10		6.35		88.0	25	59.40		80	49	28	18.0	SODH-SA90
	50...8	50.80		6.35		98.0	30	65.80		93	59	32	22.0	SODI-SA90
	65...8	63.50		6.35		98.0		72.10		106	70	36	26.0	SODJ-SA90
15	15...15	12.70	1.65	12.70	1.65	93.0	20	53.20	20	70	27	13.5	–	SA92-SA92
	20...15	19.05		12.70		103.0		55.80		70	31	18.5	5.0	SA93-SA92
	25...15	25.40		12.70		103.0		59.00		75	40	24	10.5	SODF-SA92
	40...15	38.10		12.70		103.0	25	65.30		88	54	31	17.5	SODH-SA92
	50...15	50.80		12.70		113.0	30	71.70		100	64	35	21.5	SODI-SA92
	65...15	63.50		12.70		113.0		78.00		113	73	38	24.5	SODJ-SA92
	80...15	76.20		12.70		113.0		84.40		125	84	43	29.5	SODK-SA92

DTS 1000584283 EN Version: - Status: RL (released | freigegeben | valide) printed: 28.10.2026

Valvesgo.com

valvesgo.com

Diaphragm size	Port 1 – Port 2 DN	ØD1	s1	ØD2	s2	A	B	C	E	F	G	H	I	Product key [1] (Port 1 – Port 2)
20	20...20	19.05	1.65	19.05	1.65	114	25	66.30	25	85	36	18	–	SA93-SA93
	25...20	25.40		19.05		114		69.20		88	40	24	6.0	SODF-SA93
	40...20	38.10		19.05		114		75.80		98	53	31	13.0	SODH-SA93
	50...20	50.80		19.05		124	30	82.20		111	66	37	19.0	SODI-SA93
	65...20	63.50		19.05		124		88.50		123	75	40	22.0	SODJ-SA93
	80...20	76.20		19.05		124		94.90		136	85	44	26.0	SODK-SA93
	100...20	101.60	2.11	19.05		124		107.10		161	108	54	36.0	SODL-SA93
25	25...25	25.40	1.65	25.40	1.65	124.5	25	74.8	25	95	42	26	6.0	SODF-SODF
	40...25	38.10		25.40		124.5		81.1		103	58	36	16.0	SODH-SODF
	50...25	50.80		25.40		134.5	30	87.5		120	75	44	24.0	SODI-SODF
	65...25	63.50		25.40		134.5		93.8		129	82	47	27.0	SODJ-SODF
	80...25	76.20		25.40		134.5		100.15		142	94	52	32.0	SODK-SODF
40	40...40	38.10	1.65	38.10	1.65	152.0	25	99.60	25	121	58	35	6.4	SODH-SODH
	50...40	50.80		38.10		162.0	30	101.6		131	72	43	14.4	SODI-SODH
	65...40	63.50		38.10		162.0		107.90		143	85	50	21.4	SODJ-SODH
	80...40	76.20		38.10		162.0		114.3		156	98	56	27.4	SODK-SODH
50	50...50	50.80	1.65	50.80	1.65	188.0	30	115.8	30	145	71	42	6.5	SODI-SODI
	65...50	63.50		50.80		188.0		122.10		157	85	50	14.5	SODJ-SODI
	65...65	63.50		63.50		188.0		122.10		158	86	50	14.5	SODJ-SODJ
	80...50	76.20		50.80		188.0		128.5		169	98	56	20.5	SODK-SODI
	100...65	101.60	2.11	63.50		188.0		140.7		195	120	66	30.5	SODL-SODJ
65	65...65	63.50	1.65	63.50	1.65	210.0	30	136.6	30	172	84	49	6.5	SODJ-SODJ
	80...65	76.2		63.50		210.0		145.0		187	99	57	14.5	SODK-SODJ
	100...65	101.6	2.11	63.50		210.0		155.2		210	120	66	23.5	SODL-SODJ
80	80...80	76.2	1.65	76.20	1.65	255.0	30	157.35	30	199	106	64	6.0	SODK-SODK
	100...80	101.6	2.11	76.20	1.65	255.0		169.6		224	131	77	26.0	SODL-SODK
100	100	101.6	2.11	101.6	2.11	290.0	30	207.0	30	260	120	67	10.0	SODL-SODL
SMS 3008														
25	25...25	25.0	1.2	25.0	1.2	124.5	25	75.0	25	95	43	27	7.0	SA60-SA60
	40...25	38.0		25.0		124.5		81.5		103	58	36	16.0	SA62-SA60
	50...25	51.0		25.0		134.5	30	88.0		118	72	42	22.0	SA63-SA60
40	40...40	38.0	1.2	38.0	1.2	152.0	25	95.6	25	121	58	35	6.4	SA62-SA62
	50...40	51.0		38.0		162.0	30	102.1		131	73	44	15.4	SA63-SA62
50	50...50	51.0	1.2	51.0	1.2	188.0	30	120.2	30	154	82	48	2.5	SA63-SA63

DTS 1000584283 EN Version: - Status: RL (released | freigegeben | valide) printed: 28.10.2026

valvesgo.com

Diaphragm size	Port 1 – Port 2 DN	Ø D1	s1	Ø D2	s2	A	B	C	E	F	G	H	I	Product key [1] (Port 1 – Port 2)
DIN 11850 - 0														
8	04...04	6.0	1.0	6.0	1.0	78.0	20	44.0	20	60	15	6.5	0.0	SC40-SC40
	06...06	8.0		8.0		75.0	17.5	46.5		60	13	7	0.0	SC41-SC41
	40...04	40.0	1.5	6.0		88.0	25	60.5		83	51	29	19.0	SC47-SC40
	40...8	40.0		10.0		88.0		60.5		83	51	29	19.0	SC47-SC42
	50...04	52.0		6.0		98.0	30	66.5		95	60	32	22.0	SC48-SC40
15	50...15	52.0	1.5	18.0	1.5	113.0	30	72.4	20	101	65	36	22.5	SC48-SC43
25	25...25	28.0	1.5	28.0	1.5	124.5	25	76.2	25	95	46	29	9.0	SC45-SC45
	50...25	52.0		28.0		134.5	30	91.2		120	71	42	22.0	SC48-SC45
40	25...32	28.0	1.5	34.0	1.5	152.0	25	90.3	25	122	58	32	3.4	SC45-SC46
	50...32	52.0		34.0		162.0	30	102.3		132	75	45	16.4	SC48-SC46
50	50...50	52.0	1.5	52.0	1.5	188.0	30	116.5	30	147	73	43	7.5	SC48-SC48
15	50...15	52.0	1.5	18.0	1.5	113.0	30	72.4	20	101	65	36	22.5	SC48-SC43
25	25...25	28.0	1.5	28.0	1.5	124.5	25	76.2	25	95	46	29	9.0	SC45-SC45
	50...25	52.0		28.0		134.5	30	91.2		120	71	42	22.0	SC48-SC45
40	25...32	28.0	1.5	34.0	1.5	152.0	25	90.3	25	122	58	32	3.4	SC45-SC46
	50...32	52.0		34.0		162.0	30	102.3		132	75	45	16.4	SC48-SC46
50	50...50	52.0	1.5	52.0	1.5	188.0	30	116.5	30	147	73	43	7.5	SC48-SC48
65	65...65	70.0	2.0	70.0	2.0	210.0	30	142.0	30	179	89	52	14.0	SD48-SD48
	80...65	85.0		70.0		210.0		149.5		194	104	59.5	21.5	SD49-SD48
	100...65	104.0		70.0		210.0		–		–	–	–	–	SD50-SD48
80	80...80	85.0	2.0	85.0	2.0	255.0	30	45.0	30	208	112	67	22.0	SD49-SD49
	100...80	104.0		85.0		250.0		172.1		227	132	77	32.0	SD50-SD49
100	100	104.0	2.0	104.0	2.0	293.0	30	211.5	30	267	125	70	11.0	SD50-SD50

1.) This information is part of the product key (see "6.3. Bürkert Product Enquiry Form" on page 18).

valvesgo.com

DTS 1000584283 EN Version: - Status: RL (released | freigegeben | valide) printed: 28.10.2026

valvesgo.com

4.3. T-body with clamp connection

Note:

- Dimensions in mm, unless otherwise stated
- Clamp dimensions must be added to the welded connection dimensions.

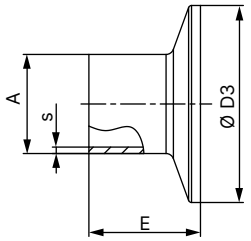

Port connection		A	s	D3	E	Product key [1.]
DN	[inch]	[mm]	[mm]	[mm]	[mm]	
DIN 32676 series A (DIN pipe)						
10	–	13	1.5	34.0	18	TD41
15	–	19	1.5	34.0	18	TD42
20	–	23	1.5	34.0	18	TD43
25	–	29	1.5	50.5	21.5	TD44
32	–	35	1.5	50.5	21.5	TD45
40	–	41	1.5	50.5	21.5	TD46
50	–	53	1.5	64.0	21.5	TD47
65	–	70	2.0	91.0	28.0	TD48
80	–	85	2.0	106.0	28.0	TD49
100	–	104	2.0	119.0	28.0	TD50
DIN 32676 series B (ISO pipe)						
8	–	13.5	1.6	25.0	28.6	TC40
8	–	13.5	1.6	34.0 [2.]	28.6	TC51 [2.]
10	–	17.2	1.6	34.0 [2.]	28.6	TC41 [2.]
15	–	21.3	1.6	34.0 [2.]	28.6	TC42 [2.]
15	–	21.3	1.6	50.5	28.6	TC52
20	–	26.9	1.6	50.5	28.6	TC43
25	–	33.7	2.0	50.5	28.6	TC44
32	–	42.4	2.0	50.5 [2.]	28.6	TC45 [2.]
40	–	48.3	2.0	64.0	28.6	TC46
50	–	60.3	2.0	77.5	28.6	TC47
65	–	76.1	2.0	91.0	28.6	TC48
80	–	88.9	2.3	106.0	28.6	TC49
100	–	114.3	2.3	130.0	28.6	TC50
ASME BPE						
8	¼	6.35	0.89	25.0	28.6	TG50
10	⅜	9.53	0.89	25.0	28.6	TG01
15	½	12.7	1.65	25.0	28.6	TG02
20	¾	19.05	1.65	25.0	28.6	TG03
25	1	25.4	1.65	50.5	28.6	TG04
40	1½	38.1	1.65	50.5	28.6	TG05
50	2	50.8	1.65	64.0	28.6	TG06
65	2½	63.5	1.65	77.5	28.6	TG07
80	3	76.2	1.65	91.0	28.6	TG08
100	4	101.6	2.11	119.0	28.6	TG09

1.) This information is part of the product key (see "6.3. Bürkert Product Enquiry Form" on page 18).

2.) Deviating from standard, because of different clamp outer diameter

DTS 1000584283 EN Version: - Status: RL (released | freigegeben | valide) printed: 28.10.2026

valvesgo.com

5. Performance specifications

5.1. Medium pressure

Note:

- The following tightening torques refer to the static media pressures specified above. Excessive torque can shorten the service life of the diaphragm.
- Pressure data [bar]: Overpressure to atmospheric pressure. Static: When closed, the valve is pressurised on one side with the maximum operating pressure.
- A tolerance of + 10 % applies to the tightening torques specified.

Diaphragm size	Maximum static operating pressure	Tightening torque for maximum static operating pressure	
		EPDM, FKM	PTFE/EPDM, advanced PTFE/EPDM, laminate of GYLON® and EPDM
	[bar]	[Nm]	[Nm]
8	10	0.6	1.1
15	10	0.8	1.7
20	10	0.9	3
25	10	1.2	3.5
32	10	2.5	4
40	10	4.5	7
50	10	6	11
65	10	8	21
80	10	12	23
100	10	13	24

valvesgo.com

DTS 1000584283 EN Version: - Status: RL (released | freigegeben | valide) printed: 28.10.2026

valvesgo.com

6. Ordering information

6.1. Bürkert eShop



Bürkert eShop – Easy ordering and quick delivery

You want to find your desired Bürkert product or spare part quickly and order directly? Our online shop is available for you 24/7. Sign up and enjoy all the benefits.

Order online now

6.2. Bürkert product filter



Bürkert product filter – Get quickly to the right product

You want to select products comfortably based on your technical requirements?
Use the Bürkert product filter and find suitable articles for your application quickly and easily.

Try out our product filter

6.3. Bürkert Product Enquiry Form

Note:
Please see our Product Enquiry Form for a full explanation of our specification key.

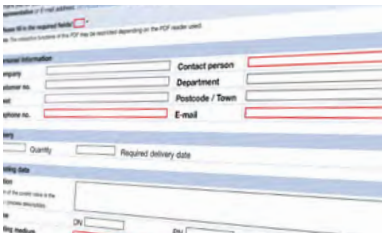

Bürkert Product Enquiry Form – Your enquiry quickly and compactly

Would you like to make a specific product enquiry based on your technical requirements? Use our Product Enquiry Form for this purpose. There you will find all the relevant information for your Bürkert contact. This will enable us to provide you with the best possible advice.

Fill out the form now

6.4. Ordering chart accessories

Description	Article no.
4-fold nylon locking mechanism with 3 mm bracket	93719475
Inductive proximity switch (initiator) M5	550412
Inductive proximity switch (initiator) M5 ATEX	904779
Inductive proximity switch (initiator) M8	902475
Inductive proximity switch (initiator) M12	902473

DTS 1000584283 EN Version: - Status: RL (released | freigegeben | valide) printed: 28.10.2026

valvesgo.com