bürkert
FLUID CONTROL SYSTEMS

Pneumatically operated 2/2-way angle seat valve CLASSIC

- Stainless steel or gunmetal housing with threaded, clamped or welded connection
- Long service life
- High flow rate
- Robust actuators with modular accessory program

Product variants described in the data sheet may differ from the product presentation and description.

Can be combined with

Type 8644
AirLINE SP electropneumatic automation system

Type 8640
Modular valve island for pneumatics

Type 8697
Pneumatic control unit for decentralised automation of process valves ELEMENT

Type 7012
Direct-acting 3/2-way plunger valve

Type 6014
Plunger valve 3/2-way direct-acting

Type 8840
Modular process valve cluster – distributor and collector

Type description

The externally piloted angle seat valve is operated with a single or double-acting piston actuator. The actuator is available in two different materials, depending on the ambient temperature. High flow rates are attained with the virtually straight flow path. The reliable self-adjusting packing gland provides high sealing integrity. These maintenance-free and robust valves can be retrofitted with a comprehensive range of accessories for position indication, stroke limitation or manual override.

valvesgo.com

DTS 1000444947 EN Version: AD Status: RL (released | freigegeben | valide) printed: 28.04.2026

© Christian Bürkert GmbH & Co. KG, Subject to alteration

valvesgo.com

Table of contents

1. General technical data 4

2. Product variants 5

2.1. Stainless steel body with PA actuator 5
2.2. Stainless steel body with PPS actuator 5
2.3. Gunmetal body with PA actuator 6

3. Control functions 7

4. Approvals and conformities 8

4.1. General notes 8
4.2. Conformity 8
4.3. Standards 8
4.4. Explosion protection 8
4.5. Drinking water 8
4.6. Foods and beverages/Hygiene 9
4.7. Others 9
DNV GL classification 9
Oxygen 9
Fuel gases 9
TA Luft 9

5. Materials 10

5.1. Bürkert resistApp 10
5.2. Material specifications 11

6. Dimensions 12

6.1. Actuator 12
Angle seat valve Type 2000 and valve system on/off CLASSIC Type 8801-YA 12
6.2. Body with threaded connection 13
6.3. Body with welded connection 14
6.4. Body with clamp connection 15

7. Performance specifications 16

7.1. Fluidic data 16
Overview of fluidic data for flow below seat (for liquids, steam and gases) 16
Pilot pressure diagrams with flow direction below seat (control function B, seat seal PTFE) 20
Overview of fluidic data with flow above seat (for gases and steam) 21
Pilot pressure diagram with flow direction above seat (control function A, seat seal PTFE) 22
7.2. Operating limits 23
Operating limits for medium temperature and operating pressure 23
Operating limits for ambient and medium temperature 24
Operating limits for optional variants 24

8. Product accessories 25

9. Networking and combination with other Bürkert products 26

DTS 1000444947 EN Version: AD Status: RL (released | freigegeben | valide) printed: 28.04.2026

valvesgo.com

valvesgo.com

10. Ordering information 27

10.1. Bürkert eShop 27
10.2. Bürkert product filter 27
10.3. Bürkert Product Enquiry Form 27
10.4. Ordering chart threaded connection 28
Valve with flow direction below seat 28
Valve with flow direction above seat 30
10.5. Ordering chart welded connection 31
Valve with flow direction below seat 31
Valve with flow direction above seat 32
10.6. Ordering chart clamp connection 33
Valve with flow direction below seat 33
Valve with flow direction above seat 34
10.7. Ordering chart accessories 35
Accessories for 3/2-way pilot valves with banjo bolts 35

DTS 1000444947 EN Version: AD Status: RL (released | freigegeben | valide) printed: 28.04.2026

valvesgo.com

valvesgo.com

1. General technical data

Product properties	
Dimensions	Further information can be found in chapter "6. Dimensions" on page 12.
Material	Further information can be found in chapter "5. Materials" on page 10.
Design	Angle seat valve
Nominal diameter (port connection)	DN 10...DN 80, NPS ⅜...NPS 3
Safety setting in case of power failure	Normally closed (control function A), normally open (control function B)
Flow direction	Flow to open (below seat), flow to close (above seat)
Performance data	
Operating pressure	0 bar(g)...25 bar(g), vacuum variants...- 0.9 bar(g) (option) (see "7.1. Fluidic data" on page 16)
Nominal pressure	PN 25 (DIN EN 1333), Class 150 (DIN EN 1759)
Pilot pressure	2...10 bar(g) (see "7.1. Fluidic data" on page 16)
Seat leakage	Leakage rate A (DIN EN 12266 - 1), seat seal PTFE and PEEK, test medium air
K_V value	1.6...140 m^3/h (see "7.1. Fluidic data" on page 16)
Medium data	
Operating medium	Steam, water, neutral gases, alcohols, oils, fuels, hydraulic fluids, salt solutions, alkalis, organic solvents, oxygen and fuel gases of families I, II and III in accordance with the Gas Appliances Regulation (EU) 2016/426
Medium temperature	- 40...+ 230 °C (see "7.2. Operating limits" on page 23)
Viscosity	Max. 600 mm^2/s
Control medium	Air, neutral gases
Product connections	
Port connection [1.)]	
Threaded connection	G (DIN ISO 228 - 1) NPT (ASME B1.20.1) RC (ISO 7 - 1)
Welded connection	DIN EN ISO 1127 / ISO 4200 / DIN 11866 series B DIN 11850 - 2 / DIN 11866 series A ASME BPE / DIN 11866 series C SMS 3008
Clamp connection	DIN 32676 series B (pipe: ISO 4200) DIN 32676 series A (pipe: DIN 11850 - 2) ASME BPE
Pilot air port	
Actuator size Ø 40 (C)	Thread G ⅛
Actuator size Ø 50 (D)...125 (H)	Thread G ¼
Approvals and conformities	
Further information can be found in chapter "4. Approvals and conformities" on page 8.	
Material certificate	2.2, 3.1
Environment and installation	
Ambient temperature	- 40...+ 140 °C (see "2. Product variants" on page 5)
Degree of protection	IP67
Installation position	As required, preferably with actuator upright

1.) Others are available on request.

DTS 1000444947 EN Version: AD Status: RL (released | freigegeben | valide) printed: 28.04.2026

valvesgo.com

2. Product variants

2.1. Stainless steel body with PA actuator

Product properties		
	Stainless steel body CF8	**Stainless steel body CF3M**
Nominal diameter (port connection)	DN 10...DN 65, NPS ⅜...NPS 2½	DN 10...DN 80, NPS ⅜...NPS 3
Performance data		
Operating pressure	0...25 bar(g), vacuum up to - 0.9 bar(g) (option) (see "7.1. Fluidic data" on page 16)	
Maximum pilot pressure		
Actuator size 40 (C), 50 (D), 63 (E), 80 (F)	10 bar(g)	
Actuator size 100 (G),125 (H)	7 bar(g)	
Media data		
Medium temperature	- 40...+ 185 °C	
Product connection		
Port connection	Threaded connection	Threaded, welded or clamp connection
Environment and installation		
Ambient temperature	- 40...+ 60 °C (see "7.2. Operating limits" on page 23)	

2.2. Stainless steel body with PPS actuator

Product properties		
	Stainless steel body CF8	**Stainless steel body CF3M**
Nominal diameter (port connection)	DN 10...DN 65, NPS ⅜...NPS 2½	DN 10...DN 80, NPS ⅜...NPS 3
Performance data		
Operating pressure	0...25 bar(g), vacuum up to - 0.9 bar(g) (option) (see "7.1. Fluidic data" on page 16)	
Maximum pilot pressure		
Actuator size 40 (C), 50 (D), 63 (E), 80 (F)	10 bar(g)	
Actuator size 100 (G), 125 (H)	7 bar(g)	
Media data		
Medium temperature	- 40...+ 185 °C	- 40...+ 230 °C
Product connection		
Port connection	Threaded connection	Threaded, welded or clamp connection
Environment and installation		
Ambient temperature	- 40...+ 140 °C (continuous operation...+ 130 °C) (see "7.2. Operating limits" on page 23)	

DTS 1000444947 EN Version: AD Status: RL (released | freigegeben | valide) printed: 28.04.2026

valvesgo.com

2.3. Gunmetal body with PA actuator

Product properties	
Nominal diameter (port connection)	DN 10...DN 65, NPS ⅜...NPS 2 ½
Performance data	
Operating pressure	0...16 bar(g), vacuum up to - 0.9 bar(g) (option) (see "7.1. Fluidic data" on page 16)
Maximum pilot pressure	
Actuator size 40 (C), 50 (D), 63 (E), 80 (F)	10 bar(g)
Actuator size 100.125 (H)	7 bar(g)
Medium data	
Medium temperature	- 40...+ 185 °C
Product connection	
Port connection	Threaded connection
Environment and installation	
Ambient temperature	- 40...+ 60 °C (see "7.2. Operating limits" on page 23)

DTS 1000444947 EN Version: AD Status: RL (released | freigegeben | valide) printed: 28.04.2026

valvesgo.com

valvesgo.com

3. Control functions

⚠ WARNING

Risk of damage due to bursting pipes and bursting equipment when the flow is above the seat.
In the case of liquid mediums, water hammer can occur, causing pipes and the device to burst.

Do not use valves with flow above the seat for liquid mediums.

Symbol	Description	
Flow direction below seat for liquids, steam and gases		
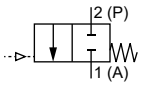	**Control function A (CF A)** Pneumatically operated 2/2-way on/off valve Flow direction below seat Normally closed by spring force	
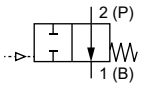	**Control function B (CF B)** Pneumatically operated 2/2-way on/off valve Flow direction below seat Normally opened by spring force	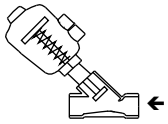
Flow direction above seat for steam and gases		
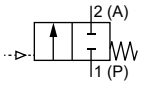	**Control function A (CF A)** Pneumatically operated 2/2-way on/off valve Flow direction above seat Normally closed by spring force	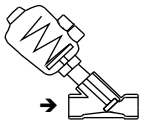

DTS 1000444947 EN Version: AD Status: RL (released | freigegeben | valide) printed: 28.04.2026

valvesgo.com

valvesgo.com

4. Approvals and conformities

4.1. General notes

- The approvals and conformities listed below must be stated when making enquiries. This is the only way to ensure that the product complies with all required specifications.
- Not all available variants can be supplied with the below mentioned approvals or conformities.

4.2. Conformity

In accordance with the Declaration of Conformity, the product is compliant with the EU Directives. This includes the following directives:

- Pressure Equipment Directive 2014/68/EU
- Machinery Directive 2006/42/EC

4.3. Standards

The applied standards which are used to demonstrate compliance with the EU Directives are listed in the EU-Type Examination Certificate and/or the EU Declaration of Conformity.

4.4. Explosion protection

Approval	Description
	Optional: Explosion protection (valid for the variable code PX51) As a category 2 device suitable for zone 1/21 and zone 2/22. **ATEX:** EPS 18 ATEX 2 008 X II 2G Ex h IIC T4...T2 Gb II 2D Ex h IIIC T135 °C...T300 °C Db **IECEx:** IECEx EPS 18.0007X Ex h IIC T4...T2 Gb Ex h IIIC T135 °C...T300 °C Db

Temperature class	T2	T3	T4
Maximum surface temperature	+ 300 °C	+ 200 °C	+ 135 °C
Ambient temperature	- 40...+ 130 °C	- 40...+ 130 °C	- 40...+ 100 °C
Maximum medium temperature	+ 285 °C	+ 185 °C	+ 125 °C

Note: The ambient and medium temperature range may be limited by non-ex-relevant specifications. Observe the operating instructions.

4.5. Drinking water

Conformity	Description
H_2O	**Suitable for use in drinking water applications** The materials comply with the assessment principles (UBA) for materials in contact with drinking water (TrinkwasserV). **Gunmetal body/stainless steel body** PF39: Suitable for products with medium temperature up to 85 °C (hot water)

DTS 1000444947 EN Version: AD Status: RL (released | freigegeben | valide) printed: 28.04.2026

valvesgo.com

4.6. Foods and beverages/Hygiene

Conformity	Description
FDA	**FDA – Code of Federal Regulations (valid for the variable code PL02)** All wetted materials are compliant with the Code of Federal Regulations published by the FDA (Food and Drug Administration, USA) according to the manufacturer's declaration.
	EC Regulation 1935/2004 of the European Parliament and of the Council (valid for the variable code PL01, PL02) All wetted materials are compliant with EC Regulation 1935/2004/EC according to the manufacturer's declaration.
	China food GB Standards of the People's Republic of China (valid for the variable code PL10) All wetted materials are compliant with the requirement of China food GB Standards according to the manufacturer's declaration.

4.7. Others

DNV GL classification

Approval	Description
TYPE APPROVED PRODUCT DNV DNV.COM/AF	**DNV GL classification – Ships, offshore units, and high speed and light craft** The products are accepted for installation on all vessels classed by DNV GL.

Oxygen

Conformity	Description
O_2	**Optional: Suitability for oxygen (valid for the variable code NL02)** The products are suitable for use with gaseous oxygen, according to the manufacturer's declaration.

Fuel gases

Conformity	Description
CE	**Fuel gases (valid for the variable code PO19, PO20)** The products comply with: • Regulation (EU) 2016/426 – Appliances burning gaseous fuels and • DVGW DIN EN 161 (Automatic shut-off valves for gas burners and gas appliances) and • DIN EN 16678, Class A or Class D (Safety and control devices for gas burners and gas burning appliances – Automatic shut-off valves for operating pressure of above 500 kPa up to and including 6 300 kPa)

TA Luft

Conformity	Description
TA Luft	**Technical instruction on air quality control (valid for the variable code PM01)**

DTS 1000444947 EN Version: AD Status: RL (released | freigegeben | valide) printed: 28.04.2026

valvesgo.com

valvesgo.com

5. Materials

5.1. Bürkert resistApp

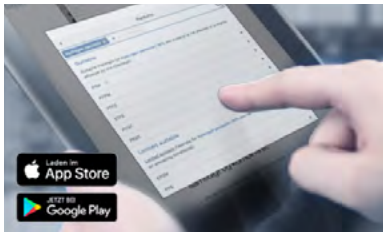

Bürkert resistApp – Chemical resistance chart

You want to ensure the reliability and durability of the materials in your individual application case? Verify your combination of media and materials on our website or in our resistApp.

Start chemical resistance check

DTS 1000444947 EN Version: AD Status: RL (released | freigegeben | valide) printed: 28.04.2026

valvesgo.com

valvesgo.com

5.2. Material specifications

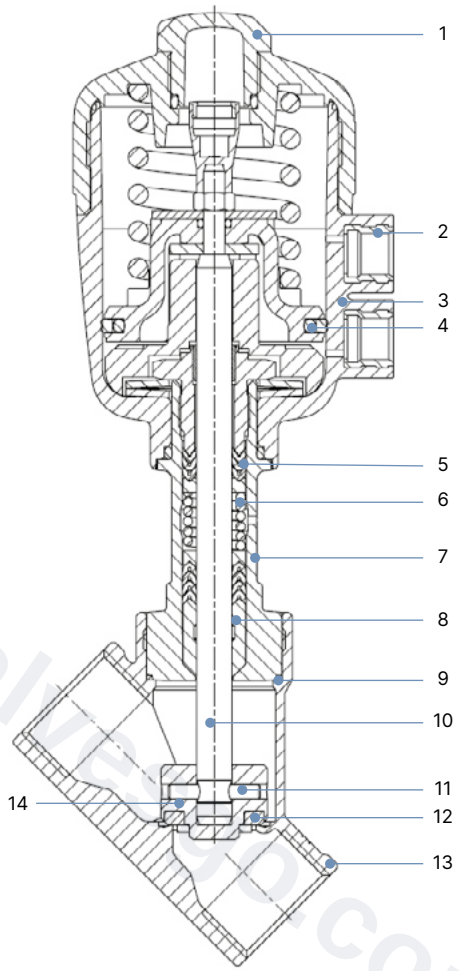

Nr.	Element	Material				
		Gunmetal body	Stainless steel body CF8		Stainless steel body CF3M	
		with PA actuator	with PA actuator	with PPS actuator	with PA actuator	with PPS actuator
1	Transparent cover	PC	PC	PSU	PC	PSU
2	Pilot air ports	Stainless steel 1.4305				
3	Actuator	PA	PA	PPS	PA	PPS
4	Piston seal	NBR	NBR	FKM	NBR	FKM
5	Packing gland	PTFE V-Rings (filled), with spring compensation				
6	Spring	Stainless steel 1.4310				
7	Pipe	Brass	Stainless steel CF8 / Stainless steel CF3M		Stainless steel CF3M	
8	Wiper	PTFE (filled), PEEK [1.)]				
9	Body seal	Graphite, PTFE (option)				
10	Spindle	Stainless steel 1.4401 / 1.4404				
11	Pin	Stainless steel 1.4401 / 1.4404				
12	Seat seal	PTFE, PEEK (option), NBR (option), FKM (option)				
13	Valve body	Gun metal	Stainless steel CF8		Stainless steel CF3M	
14	Swivel plate	Brass	Stainless steel CF8 / CF3M / 1.4401 / 1.4404		Stainless steel CF3M / 1.4401 / 1.4404	

1.) For the actuator sizes 100 mm (G) and 125 mm (H)

DTS 1000444947 EN Version: AD Status: RL (released | freigegeben | valide) printed: 28.04.2026

valvesgo.com

6. Dimensions

6.1. Actuator

Angle seat valve Type 2000 and valve system on/off CLASSIC Type 8801-YA

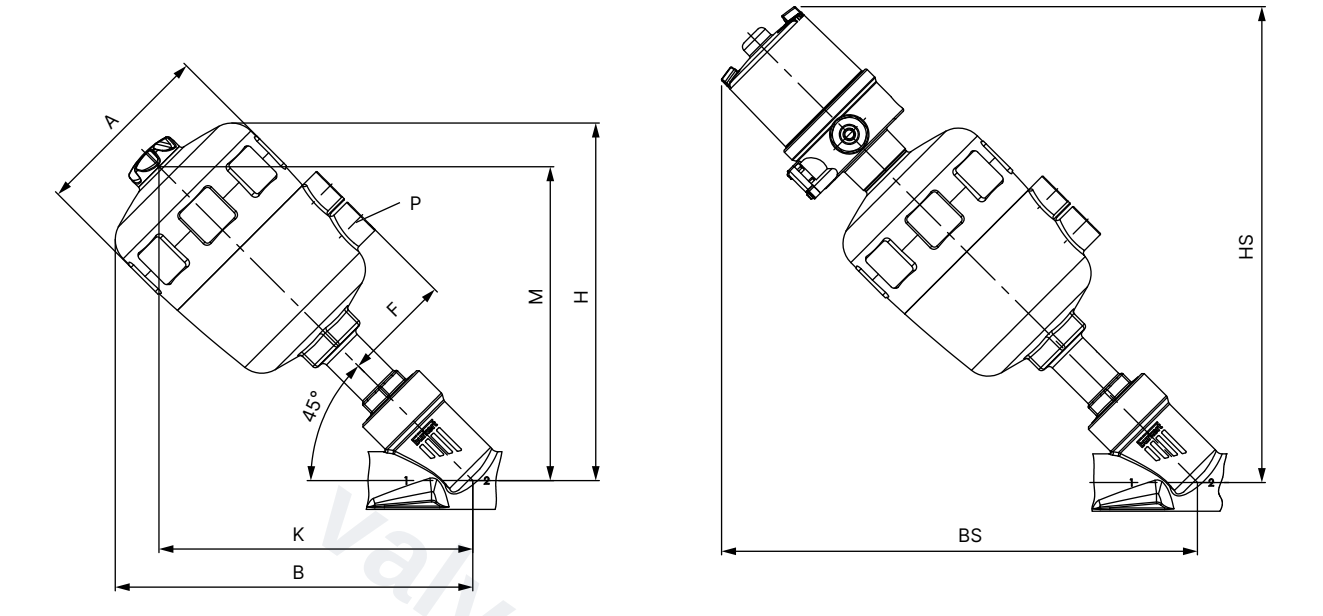

Nominal diameter (port connection)		Actuator size Ø	Ø A	B / H 1.)	K / M 1.)	P	BS / HS 1.)
DN	NPS		[mm]	[mm]	[mm]	[inch]	[mm]
10	⅜	40 (C)	53	127	110	G ⅛	198
		50 (D)	64	145	129	G ¼	216
		63 (E)	80	177	158	G ¼	246
15	½	40 (C)	53	127	110	G ⅛	198
		50 (D)	64	145	129	G ¼	216
		63 (E)	80	177	158	G ¼	246
20	¾	40 (C)	53	130	113	G ⅛	201
		50 (D)	64	150	133	G ¼	207
		63 (E)	80	174	155	G ¼	243
		80 (F)	101	195	171	G ¼	259
25	1	50 (D)	64	152	136	G ¼	223
		63 (E)	80	178	159	G ¼	242
		80 (F)	101	195	171	G ¼	259
32	1¼	63 (E)	80	188	169	G ¼	257
		80 (F)	101	209	185	G ¼	273
		100 (G)	127	262	232	G ¼	320
40	1½	63 (E)	80	191	172	G ¼	260
		80 (F)	101	213	188	G ¼	277
		100 (G)	127	251	221	G ¼	309
		125 (H)	158	291	254	G ¼	342
50	2	63 (E)	80	209	190	G ¼	278
		80 (F)	101	230	206	G ¼	294
		100 (G)	127	277	247	G ¼	335
		125 (H)	158	306	269	G ¼	357
65	2½	80 (F)	101	242	218	G ¼	306
		100 (G)	127	290	260	G ¼	348
		125 (H)	158	319	282	G ¼	370
80	3	125 (H)	158	339	301	G ¼	390

1.) The dimensions for B, H, K, M, HS and BS are maximum dimensions and may be up to 6 mm less, depending on the nominal diameter and standard.

DTS 1000444947 EN Version: AD Status: RL (released | freigegeben | valide) printed: 28.04.2026

valvesgo.com

6.2. Body with threaded connection

Note:
Dimensions in mm, unless otherwise stated

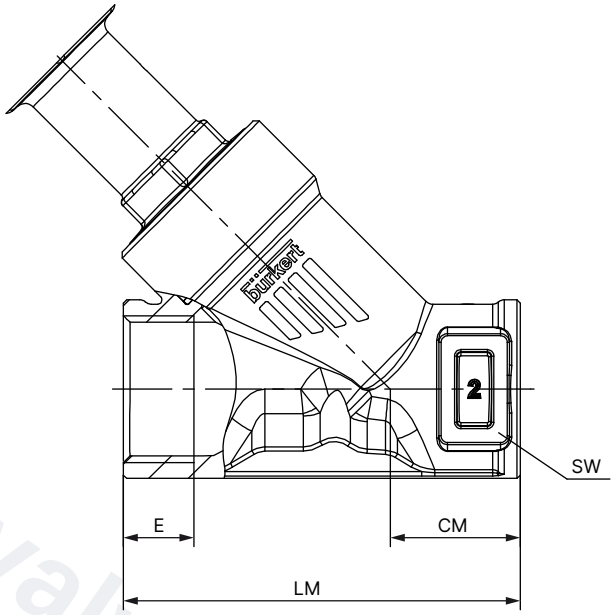

Nominal diameter (port connection)		G (DIN ISO 228-1) NPT (ASME B1.20.1) RC (ISO 7-1)					
		E			CM	LM	SW
DN	NPS	G	NPT	RC			
15	½	14	13.7	13.2	24	65	27
20	¾	16	14.0	14.5	27	75	34
25	1	18	16.8	16.8	29.5	90	41
32	1¼	16	17.3	19.1	36	110	50
40	1½	18	17.3	19.1	35	120	55
50	2	24	17.6	23.4	45	150	70
65	2½	26	23.7	26.7	57	185	85
80	3	28	–	–	71	220	100

DTS 1000444947 EN Version: AD Status: RL (released | freigegeben | valide) printed: 28.04.2026

valvesgo.com

6.3. Body with welded connection

Note:
Dimensions in mm, unless otherwise stated

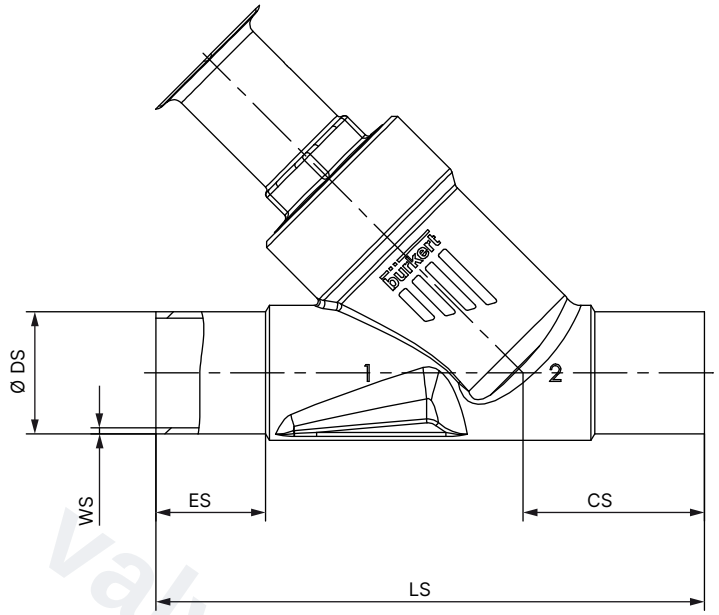

Nominal diameter (port connection)	DIN EN ISO 1127 / ISO 4200 / DIN 11866 series B					DIN 11850 - 2 / DIN 11866 series A				
DN	ES	CS	LS	Ø DS	WS	ES	CS	LS	Ø DS	WS
15	19	34	100	21.3	1.6	19	34	100	19	1.5
20	20	39	115	26.9	1.6	20	39	115	23	1.5
25	26	43	130	33.7	2.0	26	43	130	29	1.5
32	26	45	145	42.4	2.0	26	45	145	35	1.5
40	26	49	160	48.3	2.0	26	49	160	41	1.5
50	26	50	175	60.3	2.0	26	50	175	53	1.5
65	26	50	210	76.1	2.3	26	50	210	70	2
80	26	88.5	266	88.9	2.3	26	88.5	266	85	2

Nominal diameter (port connection)	ASME BPE / DIN 11866 series C				
NPS	ES	CS	LS	Ø DS	WS
½	30	46	135	12.7	1.65
¾	30	52	145	19.05	1.65
1	30	51	152	25.4	1.65
1½	30	60	182	38.1	1.65
2	30	64	210	50.8	1.65
2½	26	56	230	63.5	1.65
3	26	88.5	266	76.2	1.65

DTS 1000444947 EN Version: AD Status: RL (released | freigegeben | valide) printed: 28.04.2026

valvesgo.com

6.4. Body with clamp connection

Note:
Dimensions in mm, unless otherwise stated

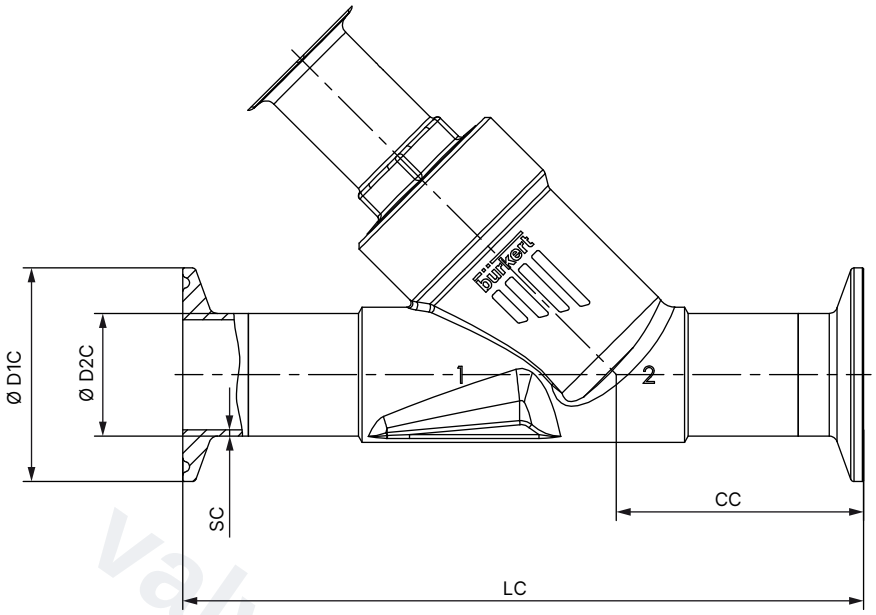

Nominal diameter (port connection)	Clamp: DIN 32676 series B Pipe: DIN EN ISO 1127 / ISO 4200 / DIN 11866 series B					Clamp: DIN 32676 series A (DN 15 similar DIN 32676 series B) Pipe: DIN 11850 - 2 / DIN 11866 series A				
DN	**LC**	**CC**	**Ø D1 C**	**Ø D2 C**	**SC**	**LC**	**CC**	**Ø D1 C**	**Ø D2 C**	**SC**
15	156	49.0	50.5	21.3	1.6	130	49.5	34.0	19	1.5
20	150	56.5	50.5	26.9	1.6	150	57.0	34.0	23	1.5
25	160	58.0	50.5	33.7	2.0	160	58.5	50.5	29	1.5
32	200	57.5	50.5	42.4	2.0	180	58.0	50.5	35	1.5
40	200	69.0	64.0	48.3	2.0	200	69.5	50.5	41	1.5
50	230	77.5	77.5	60.3	2.6	230	78.0	64.0	53	1.5

Nominal diameter (port connection)	Clamp: ASME BPE Pipe: ASME BPE / DIN 11866 series C				
NPS	**LC**	**CC**	**Ø D1 C**	**Ø D2 C**	**SC**
½	130	49.0	25.0	12.7	1.65
¾	150	56.5	25.0	19.05	1.65
1	160	58.0	50.5	25.4	1.65
1½	200	69.0	50.5	38.1	1.65
2	230	77.5	64.0	50.8	1.65

DTS 1000444947 EN Version: AD Status: RL (released | freigegeben | valide) printed: 28.04.2026

valvesgo.com

7. Performance specifications

7.1. Fluidic data

Overview of fluidic data for flow below seat (for liquids, steam and gases)

Note:

- K_V value [m³/h]: Measured with water at + 20 °C, 1 bar(g) pressure at valve inlet and free outlet
- C_V value [GMP(US)] = K_V x 1.156

Threaded port G, NPT and RC

Nominal diameter (port connection)		Seat size	Actuator size Ø	K_V value water	Pilot pressure min.	Operating pressure max.		
						CF A		CF B
						Seat seal		
						PTFE	PEEK	PTFE
DN	NPS	DN	[mm]	[m³/h]	[bar(g)]	[bar(g)]	[bar(g)]	[bar(g)]
8	¼	15	40 (C)	2.6	4	15	–	16
			50 (D)	2.6	4.1	16	–	16
			63 (E)	2.6	4.5	25 1.)	25 1.)	25 1.)
10	⅜		40 (C)	4.7	4	15	–	16
			50 (D)	5	4.1	16	–	16
			63 (E)	5.4	4.5	25 1.)	25 1.)	25 1.)
15	½		40 (C)	4.7	4	15	–	16
			50 (D)	5	4.1	16	–	16
			63 (E)	5.4	4.5	25 1.)	25 1.)	25 1.)
20	¾	20	40 (C)	8.4	4	6.5	–	16
			50 (D)	10	4.1	11	–	16
			63 (E)	11	4.5	20 1.)	16	25 1.)
			80 (F)	11	5	25 1.)	25 1.)	–
25	1	25	50 (D)	15	4.1	5.2	–	16
			63 (E)	19	4.5	11	–	25 1.)
			80 (F)	19	5	25 1.)	21 1.)	25 1.)
32	1¼	32	63 (E)	29	4.5	6	–	25 1.)
			80 (F)	30	5	14	11.5	25 1.)
			100 (G)	32	4.4	16	–	–
			125 (H)	32	4.1	25 1.)	25 1.)	–
40	1½	40	63 (E)	38	4.5	4	–	24 1.)
			80 (F)	40	5	9	–	25 1.)
			100 (G)	47	4.4	12.5	–	25 1.)
			125 (H)	46	4.1	25 1.)	25 1.)	–
50	2	50	63 (E)	44	4.5	2.5	–	13
			80 (F)	49	5	6	–	25 1.) (20 2.))
			100 (G)	62	4.4	7.2	–	25 1.) (20 2.))
			125 (H)	62	5.7	24 1.) (20 2.))	19 1.)	–
65	2½	65	80 (F)	74	5	3.5	–	15
			125 (H)	91	5.7	12	10	23 1.) (15 2.))
80	3	80	125 (H)	140	5.7	7.5	–	14 1.) (12.5 2.))

1.) Gunmetal variants are limited to a maximum of 16 bar(g).
2.) According to pressure equipment directive 2014/68/EU for compressible fluids of group 1 (dangerous gases and vapours according to Article 4, paragraph (1), c), i), first indent)

DTS 1000444947 EN Version: AD Status: RL (released | freigegeben | valide) printed: 28.04.2026

valvesgo.com

Welded connection DIN 11850 series 2, DIN 11866 series A, DIN EN 10357 series A

Nominal diameter (port connection)		Seat size	Actuator size Ø	K_V value water	Pilot pressure min.	Operating pressure max.		
						CF A		CF B
						Seat seal		
						PTFE	PEEK	PTFE
DN	NPS	DN	[mm]	[m³/h]	[bar(g)]	[bar(g)]	[bar(g)]	[bar(g)]
10	⅜	15	40 (C)	2.5	4	15	–	16
			50 (D)	2.5	4.1	16	–	16
			63 (E)	2.5	4.5	25 1.)	25 1.)	25 1.)
15	½		40 (C)	4.7	4	15	–	16
			50 (D)	5	4.1	16	–	16
			63 (E)	5.4	4.5	25 1.)	25 1.)	25 1.)
20	¾	20	40 (C)	8.4	4	6.5	–	16
			50 (D)	10	4.1	11	–	16
			63 (E)	11	4.5	20 1.)	16	25 1.)
			80 (F)	11	5	25 1.)	25 1.)	–
25	1	25	50 (D)	14	4.1	5.2	–	16
			63 (E)	19	4.5	11	–	25 1.)
			80 (F)	19	5	25 1.)	21 1.)	25 1.)
32	1¼	32	63 (E)	26	4.5	6	–	25 1.)
			80 (F)	26	5	14	11.5	25 1.)
			100 (G)	30	4.4	16	–	–
			125 (H)	30	4.1	25 1.)	25 1.)	–
40	1½	40	63 (E)	33	4.5	4	–	24 1.)
			80 (F)	35	5	9	–	25 1.)
			100 (G)	41	4.4	12.5	–	25 1.)
			125 (H)	40	4.1	25 1.)	25 1.)	–
50	2	50	63 (E)	44	4.5	2.5	–	13
			80 (F)	49	5	6	–	25 1.) (20 2.))
			100 (G)	60	4.4	7.2	–	25 1.) (20 2.))
			125 (H)	60	5.7	24 1.) (20 2.))	19 1.)	–
65	2½	65	80 (F)	74	5	3.5	–	15
			125 (H)	91	5.7	12	10	23 1.) (15 2.))
80	3	80	125 (H)	140	5.7	7.5	–	14 1.) (12.5 2.))

1.) Gunmetal variants are limited to a maximum of 16 bar(g).
2.) According to pressure equipment directive 2014/68/EU for compressible fluids of group 1 (dangerous gases and vapours according to Article 4, paragraph (1), c), i), first indent)

DTS 1000444947 EN Version: AD Status: RL (released | freigegeben | valide) printed: 28.04.2026

valvesgo.com

Welded connection ISO 4200, DIN EN ISO 1127, DIN 11866 series B / Flange DIN EN 1092 - 1 (PN 25)

Nominal diameter (port connection)		Seat size	Actuator size Ø	K_V value water	Pilot pressure min.	Operating pressure max.		
						CF A		CF B
						Seat seal		
						PTFE	PEEK	PTFE
OD [mm]	NPS	DN	[mm]	[m³/h]	[bar(g)]	[bar(g)]	[bar(g)]	[bar(g)]
13.5	–	15	40 (C)	2.5	4	15	–	16
			50 (D)	2.5	4.1	16	–	16
			63 (E)	2.5	4.5	25 [1.)]	25 [1.)]	25 [1.)]
17.2			40 (C)	4.7	4	15	–	16
			50 (D)	5	4.1	16	–	16
			63 (E)	5.4	4.5	25 [1.)]	25 [1.)]	25 [1.)]
21.3			40 (C)	4.7	4	15	–	16
			50 (D)	5	4.1	16	–	16
			63 (E)	5.4	4.5	25 [1.)]	25 [1.)]	25 [1.)]
26.9		20	40 (C)	8.4	4	6.5	–	16
			50 (D)	10	4.1	11	–	16
			63 (E)	11	4.5	20 [1.)]	16	25 [1.)]
			80 (F)	11	5	25 [1.)]	25 [1.)]	–
33.7		25	50 (D)	15	4.1	5.2	–	16
			63 (E)	19	4.5	11	–	25 [1.)]
			80 (F)	19	5	25 [1.)]	21 [1.)]	25 [1.)]
42.4		32	63 (E)	29	4.5	6	–	25 [1.)]
			80 (F)	30	5	14	11.5	25 [1.)]
			100 (G)	32	4.4	16	–	–
			125 (H)	32	4.1	25 [1.)]	25 [1.)]	–
48.3		40	63 (E)	38	4.5	4	–	24 [1.)]
			80 (F)	40	5	9	–	25 [1.)] (20 [2.)])
			100 (G)	47	4.4	12.5	–	25 [1.)] (20 [2.)])
			125 (H)	46	4.1	25 [1.)]	25 [1.)]	–
60.3		50	63 (E)	44	4.5	2.5	–	13
			80 (F)	49	5	6	–	25 [1.)]
			100 (G)	62	4.4	7.2	–	25 [1.)]
			125 (H)	62	5.7	24 [1.)] (20 [2.)])	19 [1.)]	–
76.1		65	80 (F)	74	5	3.5	–	15
			125 (H)	91	5.7	12	10	23 [1.)] (15 [2.)])
88.9		80	125 (H)	140	5.7	7.5	–	14 [1.)] (12.5 [2.)])

1.) Gunmetal variants are limited to a maximum of 16 bar(g).
2.) According to pressure equipment directive 2014/68/EU for compressible fluids of group 1 (dangerous gases and vapours according to Article 4, paragraph (1), c), i), first indent)

DTS 1000444947 EN Version: AD Status: RL (released | freigegeben | valide) printed: 28.04.2026

valvesgo.com

Welded connection ASME BPE, DIN 11866 series C / Clamp ASME BPE

Nominal diameter (port connection)		Seat size	Actuator size Ø	K_V value water	Pilot pressure min.	Operating pressure max.		
						CF A		CF B
						Seat seal		
						PTFE	PEEK	PTFE
DN	NPS	DN	[mm]	[m³/h]	[bar(g)]	[bar(g)]	[bar(g)]	[bar(g)]
15	½	15	40 (C)	1.6	4	15	–	16
			50 (D)	1.6	4.1	16	–	16
			63 (E)	1.6	4.5	25 [1.)]	25 [1.)]	25 [1.)]
20	¾	20	40 (C)	6.9	4	6.5	–	16
			50 (D)	8.4	4.1	11	–	16
			63 (E)	9.6	4.5	20 [1.)]	16	25 [1.)]
			80 (F)	9.4	5	25 [1.)]	25 [1.)]	–
25	1	25	50 (D)	13	4.1	5.2	–	16
			63 (E)	16	4.5	11	–	25 [1.)]
			80 (F)	16	5	25 [1.)]	21 [1.)]	25 [1.)]
40	1½	40	63 (E)	32	4.5	4	–	24 [1.)]
			80 (F)	35	5	9	–	25 [1.)]
			100 (G)	41	4.4	12.5	–	25 [1.)]
			125 (H)	40	4.1	25 [1.)]	25 [1.)]	–
50	2	50	63 (E)	44	4.5	2.5	–	13
			80 (F)	49	5	6	–	25 [1.)] (20 [2.)])
			100 (G)	58	4.4	7.2	–	25 [1.)] (20 [2.)])
			125 (H)	58	5.7	24 [1.)] (20 [2.)])	19 [1.)]	–
65	2½	65	80 (F)	74	5	3.5	–	15
			125 (H)	85	5.7	12	10	23 [1.)] (15 [2.)])
80	3		125 (H)	91	5.7	12	10	23 [1.)] (15 [2.)])
80	3	80	125 (H)	140	5.7	7.5	–	14 [1.)] (12.5 [2.)])

1.) Gunmetal variants are limited to a maximum of 16 bar(g).
2.) According to pressure equipment directive 2014/68/EU for compressible fluids of group 1 (dangerous gases and vapours according to Article 4, paragraph (1), c), i), first indent)

DTS 1000444947 EN Version: AD Status: RL (released | freigegeben | valide) printed: 28.04.2026

valvesgo.com

Pilot pressure diagrams with flow direction below seat (control function B, seat seal PTFE)

Actuator size Ø 40 mm (C)
Maximum pilot pressure 10 bar(g)

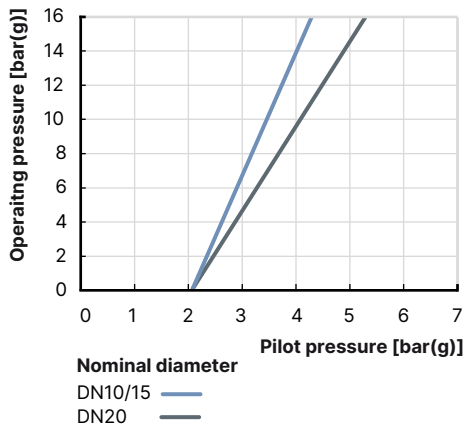

Actuator size Ø 50 mm (D)
Maximum pilot pressure 10 bar(g)

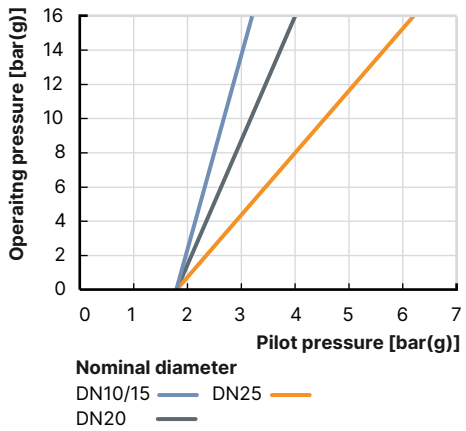

Actuator size Ø 63 mm (E)
Maximum pilot pressure 10 bar(g)

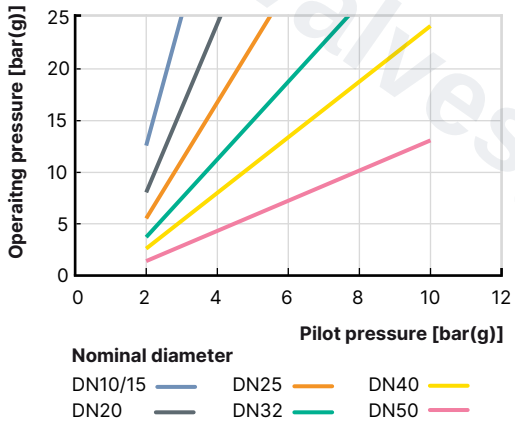

Actuator size Ø 80 mm (F)
Maximum pilot pressure 10 bar(g)

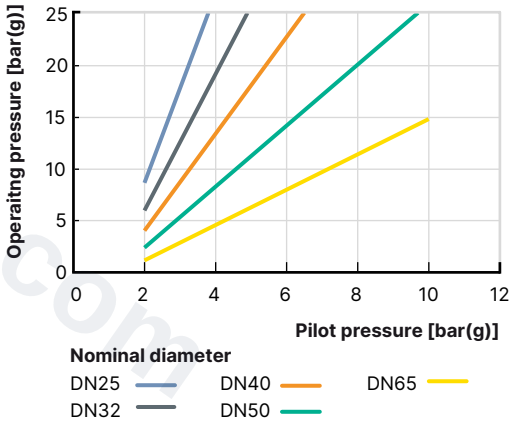

Actuator size Ø 100 mm (G)
Maximum pilot pressure 7 bar(g)

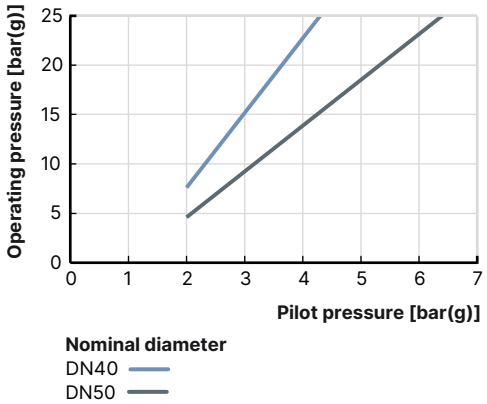

Actuator size Ø 125 mm (H)
Maximum pilot pressure 7 bar(g)

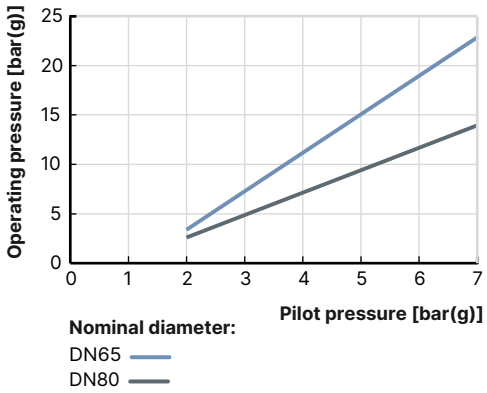

DTS 1000444947 EN Version: AD Status: RL (released | freigegeben | valide) printed: 28.04.2026

valvesgo.com

Overview of fluidic data with flow above seat (for gases and steam)

Note:

- K_V value [m³/h]: Measured with water at + 20 °C, 1 bar(g) pressure at valve inlet and free outlet
- K_V value water: see **"Overview of fluidic data for flow below seat (for liquids, steam and gases)" on page 16**
- Pressure data [bar(g)]: Overpressure to atmospheric pressure

⚠ WARNING

Risk of damage due to bursting pipes and bursting equipment when the flow is above the seat.
In the case of liquid mediums, water hammer can occur, causing pipes and the device to burst.

Do not use valves with flow above the seat for liquid mediums.

Nominal diameter (port connection)		Actuator size Ø	Operating pressure max.
			CF A
			PTFE
DN	NPS	[mm]	[bar(g)]
10	⅜	40 (C)	16
		50 (D)	16
15	½	40 (C)	16
		50 (D)	16
20	¾	40 (C)	16
		50 (D)	16
25	1	50 (D)	16
		63 (E)	16
32	1¼	63 (E)	16
40	1½	63 (E)	16
		80 (F)	16
50	2	63 (E)	16
		80 (F)	16
65	2½	80 (F)	14
		100 (G)	15

DTS 1000444947 EN Version: AD Status: RL (released | freigegeben | valide) printed: 28.04.2026

valvesgo.com

Pilot pressure diagram with flow direction above seat (control function A, seat seal PTFE)

Actuator size Ø 40 mm
Maximum pilot pressure 10 bar(g)

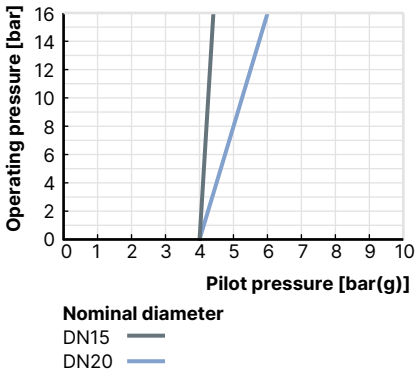

Actuator size Ø 50 mm
Maximum pilot pressure 10 bar(g)

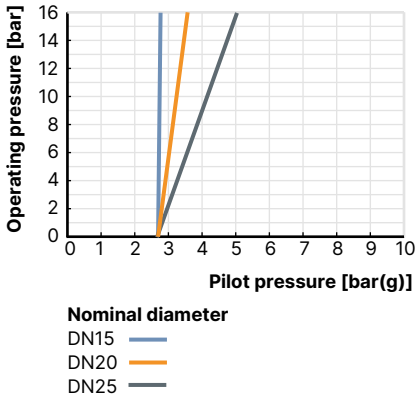

Actuator size Ø 63 mm
Maximum pilot pressure 10 bar(g)

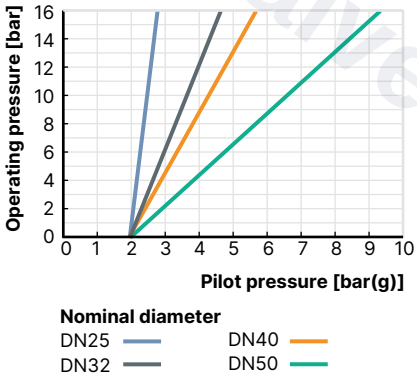

Actuator size Ø 80 mm
Maximum pilot pressure 10 bar(g)

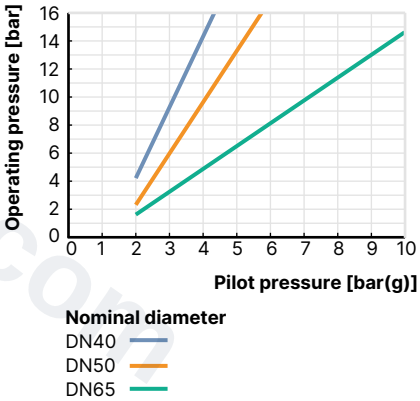

Actuator size Ø 100 mm
Maximum pilot pressure 7 bar(g)

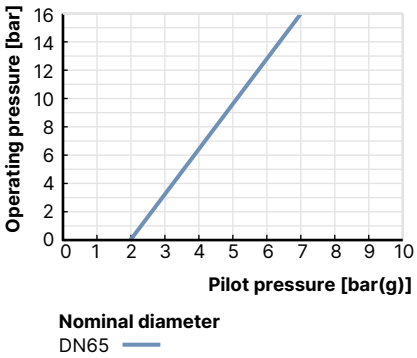

DTS 1000444947 EN Version: AD Status: RL (released | freigegeben | valide) printed: 28.04.2026

valvesgo.com

valvesgo.com

7.2. Operating limits

Operating limits for medium temperature and operating pressure

In addition to the maximum operating pressures, the operating range of Bürkert process valves is limited by the nominal pressure according to the relevant standard.

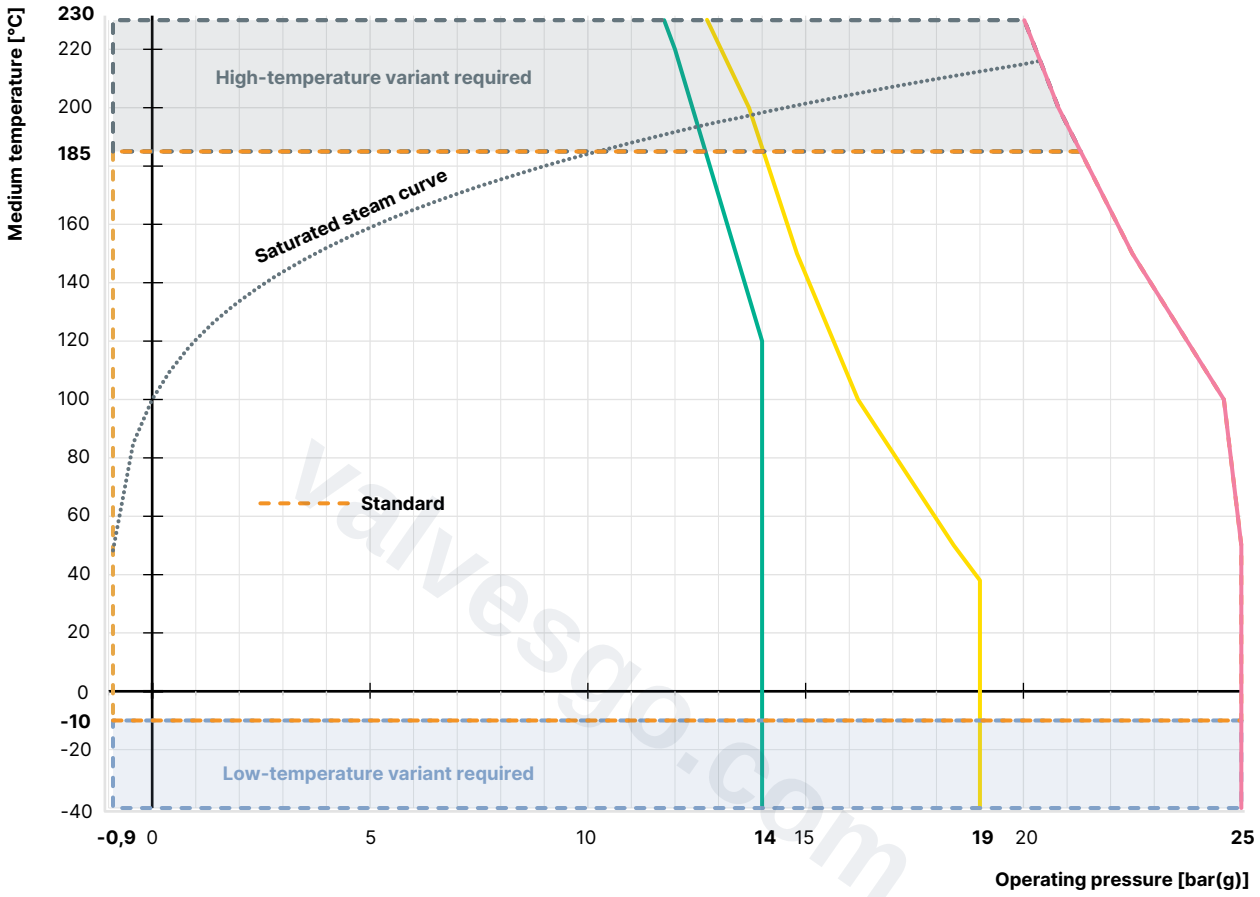

- Operating limits for PN25 according to DIN EN 12516-1
- Operating limits for flange 10K according to JIS B 2220
- Operating limits for Class 150 according to ASME B16.34
- Saturated steam curve for water

DTS 1000444947 EN Version: AD Status: RL (released | freigegeben | valide) printed: 28.04.2026

valvesgo.com

Operating limits for ambient and medium temperature

Note:
For size 40, 50 and 63 PA actuators, the combination of maximum medium temperature and maximum ambient temperature is shown in the following diagram:

Classic PA actuator

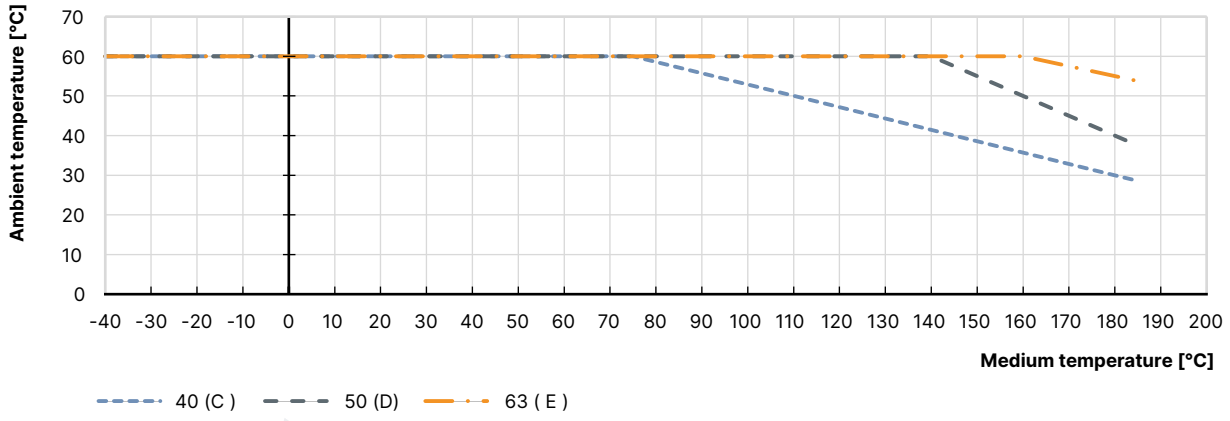

Classic PPS actuator

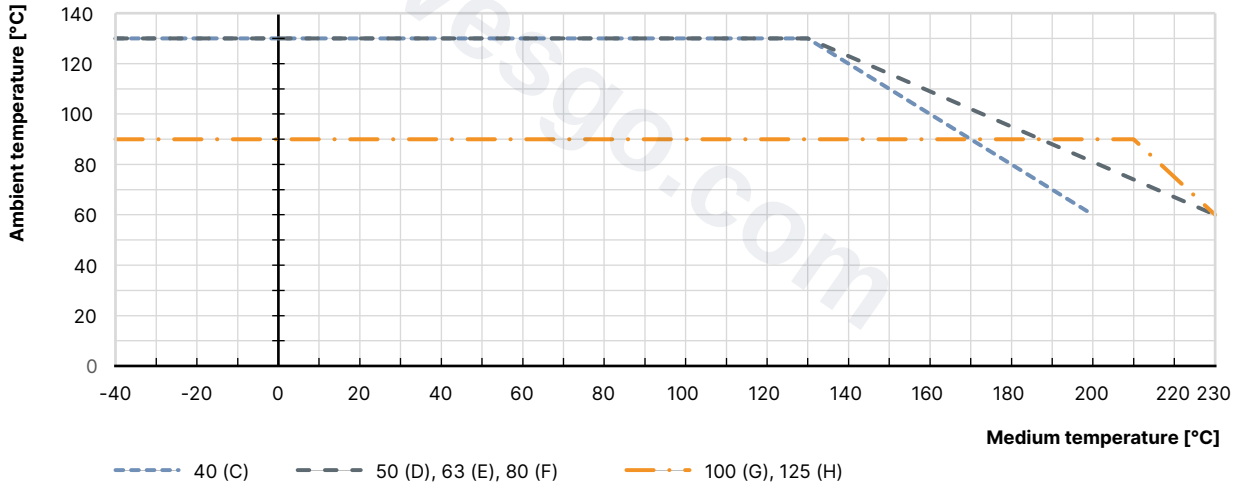

Operating limits for optional variants

High-temperature variant
Thanks to an adaption of the packing gland and seat seal in PEEK, this variant is suitable for applications with steam, neutral gases and other heat transfer mediums up to + 230 °C.

Water variant
For applications with water up to + 200 °C, a special configuration of the spindle seal increases service life significantly. It is recommended for water temperatures starting at + 85 °C.

Vacuum variant
Without leakage bore, this design is suitable for pressures down to - 0.9 bar(g).

Low-temperature variant
Suitable for minimum medium temperatures down to - 40 °C

DTS 1000444947 EN Version: AD Status: RL (released | freigegeben | valide) printed: 28.04.2026

valvesgo.com

8. Product accessories

Electric position feedback indicator

Type 8697 ▸ Actuator size Ø 40 (C)...125 (H)

The position feedback Type 8697 is designed for integrated mounting on CLASSIC series 20XX process valves, suiting the requirements of hygienic process environments. Mechanical or inductive limit switches register the position of the valve.

Features
- Compact design
- LED position indicator
- Mechanical or inductive limit switches for end position registering
- Easy-to-clean clean chemically resistant housing featuring IP65/IP67, 4X Rating
- Optionally intrinsically safe variant according to IECEx

Customer benefits
- Easy and quick installation
- High level of signal reliability thanks to self-adjusting limit switches
- Minimised space requirement in the plant piping for more flexibility in plant design

Adaptation for proximity switch

Type 2XXX ▸

Various options for the use of inductive proximity switches are available for the CLASSIC series actuators:
- Nipple
- Support bracket, 1-fold
- Support bracket, 2-fold

Plunger valve 3/2-way direct acting

Type 6012 ▸ for Actuator size Ø 40 (C)...63 (E), Type 6014 ▸ for Actuator size Ø 50 (D)...125 (H)

For easy direct mounting to a pneumatic actuator, a banjo connection with banjo bolt is the ideal solution. An optional manual override allows fast commissioning and optimum maintenance.

In conjunction with a cable plug according to DIN EN 175301-803 Form A or B, the valves meet protection class IP65.

Features
- High reliability
- Resistant according to IP65

Customer benefits
Easy and quick installation

Stroke limiter

Type 2XXX ▸

Stroke limitations can be used to limit the minimum and maximum flow rate of the valves.

Different variants are available:
- Maximum stroke limitation
- Maximum and minimum stroke limitation with optical position indicator

DTS 1000444947 EN Version: AD Status: RL (released | freigegeben | valide) printed: 28.04.2026

valvesgo.com

9. Networking and combination with other Bürkert products

The **angled seat valve Type 2000** can be combined with the **feedback positioner Type 8697** to form the **valve system on/off CLASSIC Type 8801-YA**.

Note:

- For the configuration of further valve systems use the **Product Enquiry Form** (see **"10.3. Bürkert Product Enquiry Form" on page 27**).
- You order two components and receive a completely assembled and tested valve.

Angle seat valve

Type 2000 threaded connection	Type 2000 welded connection	Type 2000 clamp connection

Feedback positioner

Type 8697 ▸
Pneumatic control for decentralised automation of CLASSIC process valves

Valve system on/off CLASSIC

Type 8801-YA-U ▸
on/off CLASSIC valve system with decentralised automation

DTS 1000444947 EN Version: AD Status: RL (released | freigegeben | valide) printed: 28.04.2026

valvesgo.com

10. Ordering information

10.1. Bürkert eShop

Bürkert eShop – Easy ordering and quick delivery

You want to find your desired Bürkert product or spare part quickly and order directly? Our online shop is available for you 24/7. Sign up and enjoy all the benefits.

Order online now

10.2. Bürkert product filter

Bürkert product filter – Get quickly to the right product

You want to select products comfortably based on your technical requirements?
Use the Bürkert product filter and find suitable articles for your application quickly and easily.

Try out our product filter

10.3. Bürkert Product Enquiry Form

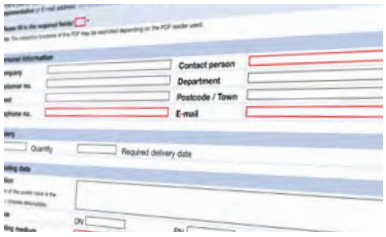

Bürkert Product Enquiry Form – Your enquiry quickly and compactly

Would you like to make a specific product enquiry based on your technical requirements? Use our Product Enquiry Form for this purpose. There you will find all the relevant information for your Bürkert contact. This will enable us to provide you with the best possible advice.

Fill out the form now

DTS 1000444947 EN Version: AD Status: RL (released | freigegeben | valide) printed: 28.04.2026

valvesgo.com

10.4. Ordering chart threaded connection

Valve with flow direction below seat

Gunmetal body

Control function	Nominal diameter (port connection)	Actuator size Ø	Pilot pressure min.	Operating pressure max.	Article no.
	NPS	[mm]	[bar(g)]	[bar(g)]	PA actuator
DIN ISO 228 - 1					
A (CF A) see control functions 1.)	⅜	40 (C)	4.0	15	344651
	½	40 (C)	4.0	15	342508
		50 (D)	4.1	16	344665
	¾	50 (D)	4.1	11	344662
		63 (E)	4.5	16	344654
	1	63 (E)	4.5	11	344658
		80 (F)	5.0	16	344768
	1¼	80 (F)	5.0	14	344680
	1½	80 (F)	5.0	9	344675
		125 (H)	3.2	16	343138
		125 (H)	4.1	–	–
	2	100 (G)	4.4	7.2	183193
		125 (H)	3.2	10	344411
		125 (H)	5.7	–	–
	2½	125 (H)	3.2	5.2	344384
		125 (H)	5.7	–	–
	3	125 (H)	5.7	–	–
B (CF B) see control functions 1.)	⅜	40 (C)	See diagrams 2.)	16	344510
	½	40 (C)		16	344641
		50 (D)		16	344672
	¾	50 (D)		16	344668
	1	50 (D)		16	344685
	1¼	63 (E)		16	344681
	1½	63 (E)		16	344698
	2	63 (E)		13	342965
		80 (F)		16	344412
	2½	80 (F)		15	439038
	3	125 (H)		–	–

o. r. = on request

1.) For more information, refer to the chapter "3. Control functions" on page 7.

2.) See diagrams in chapter "Pilot pressure diagrams with flow direction below seat (control function B, seat seal PTFE)" on page 20

3.) According to pressure equipment directive 2014/68/EU for compressible fluids of group 1 (dangerous gases and vapours according to article 4, paragraph (1), c), i), first indent)

DTS 1000444947 EN Version: AD Status: RL (released | freigegeben | valide) printed: 28.04.2026

valvesgo.com

Stainless steel body

Control function	Nominal diameter (port connection)	Actuator size Ø	Pilot pressure min.	Operating pressure max.	Article no.			
					CF3M	CF8	CF3M	CF8
	NPS	[mm]	[bar(g)]	[bar(g)]	PA actuator		PPS actuator	
DIN ISO 228 - 1								
A (CF A) see control functions [1.)]	⅜	40 (C)	4.0	15	342352	o. r.	344649	o. r.
	½	40 (C)	4.0	15	345487	o. r.	344645	o. r.
		50 (D)	4.1	16	341191	o. r.	344663	o. r.
	¾	50 (D)	4.1	11	344660	o. r.	344659	o. r.
		63 (E)	4.5	20	342666	o. r.	344652	o. r.
	1	63 (E)	4.5	11	344656	o. r.	344655	o. r.
		80 (F)	5.0	25	342693	o. r.	344822	o. r.
	1¼	80 (F)	5.0	14	340789	o. r.	344676	o. r.
	1½	80 (F)	5.0	9	343142	o. r.	344673	o. r.
		125 (H)	3.2	16	342695	o. r.	o. r.	o. r.
		125 (H)	4.1	25	344989	o. r.	o. r.	o. r.
	2	100 (G)	4.4	7.2	344381	o. r.	344382	o. r.
		125 (H)	3.2	10	o. r.	o. r.	o. r.	o. r.
		125 (H)	5.7	24 (20 [3.)])	20001172	o. r.	o. r.	o. r.
	2½	125 (H)	3.2	5.2	344385	o. r.	344432	o. r.
		125 (H)	5.7	12	o. r.	o. r.	361565	o. r.
	3	125 (H)	5.7	7.5	350628	o. r.	o. r.	o. r.
B (CF B) see control functions [1.)]	⅜	40 (C)	See diagrams [2.)]	16	344517	o. r.	344647	o. r.
	½	40 (C)		16	344642	o. r.	344643	o. r.
		50 (D)		16	344670	o. r.	344669	o. r.
	¾	50 (D)		16	344667	o. r.	344666	o. r.
	1	50 (D)		16	344683	o. r.	344682	o. r.
	1¼	63 (E)		25	344687	o. r.	344686	o. r.
	1½	63 (E)		25	344696	o. r.	344695	o. r.
	2	63 (E)		13	344386	o. r.	344433	o. r.
		80 (F)		25 (20 [3.)])	344413	o. r.	344459	o. r.
	2½	80 (F)		15	344387	o. r.	344434	o. r.
	3	125 (H)		14 (12.5 [3.)])	370263	o. r.	o. r.	o. r.

o. r. = on request

1.) For more information, refer to the chapter "3. Control functions" on page 7.

2.) See diagrams in chapter "Pilot pressure diagrams with flow direction below seat (control function B, seat seal PTFE)" on page 20

3.) According to pressure equipment directive 2014/68/EU for compressible fluids of group 1 (dangerous gases and vapours according to article 4, paragraph (1), c), i), first indent)

DTS 1000444947 EN Version: AD Status: RL (released | freigegeben | valide) printed: 28.04.2026

valvesgo.com

Valve with flow direction above seat

Note:
See diagrams in chapter "Pilot pressure diagram with flow direction above seat (control function A, seat seal PTFE)" on page 22.

Control function	Nominal diameter (port connection)	Actuator size Ø	Operating pressure max.	Article no.				
				Gunmetal body	Stainless steel body CF3M		Stainless steel body CF8	
	NPS	[m³/h]	[bar(g)]	PA actuator	PA actuator	PPS actuator	PA actuator	PPS actuator
DIN ISO 228 - 1								
A (CF A) see control functions [1.)]	⅜	40 (C)	16	344782	344516	o. r.	o. r.	o. r.
	½	50 (D)	16	344734	344761	344765	o. r.	o. r.
	¾	40 (C)	16	344803	344820	o. r.	o. r.	o. r.
		50 (D)	16	344741	344740	344709	o. r.	o. r.
	1	50 (D)	16	344763	344793	344827	o. r.	o. r.
		63 (E)	16	344694	344693	344692	o. r.	o. r.
	1¼	63 (E)	16	344691	344700	344699	o. r.	o. r.
	1½	63 (E)	16	344703	344702	344701	o. r.	o. r.
	2	63 (E)	16	344383	344395	344454	o. r.	o. r.
	2½	80 (F)	14	344394	344396	344457	o. r.	o. r.
		100 (G)	15	344485	344487	o. r.	o. r.	o. r.

o. r. = on request
1.) For more information, refer to the chapter "3. Control functions" on page 7.

Further variants on request

Approval
Food processing, drinking water, oxygen, fuel gases, explosion protection

Pressure
Other variants for operating pressures up to 25 bar(g)
Vacuum variant down to - 0.9 bar(g)

Material
Seal: NBR, FKM, EPDM

Temperature
High temperature variant up to + 230 °C
Hot water variant up to + 200 °C
Low temperature variant down to - 40 °C

Process connection
Clamp connection, welded connection

DTS 1000444947 EN Version: AD Status: RL (released | freigegeben | valide) printed: 28.04.2026

valvesgo.com

10.5. Ordering chart welded connection

Valve with flow direction below seat

Control function	Nominal diameter (port connection)	Actuator size Ø	Port connection Pipe Ø	Pilot pressure min.	Operating pressure max.	Article no.	
						PA actuator	PPS actuator
	NPS	[mm]	[mm]	[bar(g)]	[bar(g)]		
DIN EN ISO 1127 / ISO 4200							
A (CF A) see control functions 1.)	15	50 (D)	21.3 × 1.6	4.1	16	344388	344473
	20	50 (D)	26.9 × 1.6	4.1	11	344389	344474
	25	63 (E)	33.7 × 2.0	4.5	11	344390	344475
	32	80 (F)	42.4 × 2.0	5	14	344391	344450
	40	80 (F)	48.3 × 2.0	5	9	344392	344483
	50	100 (G)	60.3 × 2.0	4.4	7.2	345012	356461
	65	125 (H)	76.1 × 2.3	3.2	5.2	344588	o. r.
			76.1 × 2.3	5.7	12	20001505	o. r.
B (CF B) see control functions 1.)	15	50 (D)	21.3 × 1.6	See diagrams 2.)	16	345485	344478
	20	50 (D)	26.9 × 1.6		16	344405	344479
	25	63 (E)	33.7 × 2.0		25	344406	o. r.
	32	63 (E)	42.4 × 2.0		25	344407	o. r.
	40	63 (E)	48.3 × 2.0		25	344408	353580
	50	63 (E)	60.3 × 2.0		13	345013	o. r.
	65	80 (F)	76.1 × 2.3		15	344609	o. r.
DIN 11850 - 2							
A (CF A) see control functions 1.)	15	50 (D)	19 × 1.5	4.1	16	344267	344557
	20	50 (D)	23 × 1.5	4.1	11	344522	344559
	25	63 (E)	29 × 1.5	4.5	11	344523	344540
	32	80 (F)	35 × 1.5	5	14	344524	352462
	40	80 (F)	41 × 1.5	5	9	344525	352468
	50	100 (G)	53 × 1.5	4.4	7.2	344526	352467
	65	125 (H)	70 × 2.0	3.2	5.2	344614	o. r.
			70 × 2.0	5.7	12	20015086	o. r.
B (CF B) see control functions 1.)	15	50 (D)	19 × 1.5	See diagrams 2.)	16	344527	352208
	20	50 (D)	23 × 1.5		16	344528	344558
	25	63 (E)	29 × 1.5		25	344530	366314
	32	63 (E)	35 × 1.5		25	344531	352385
	40	63 (E)	41 × 1.5		25	344532	352387
	50	63 (E)	53 × 1.5		13	344533	154903
	65	80 (F)	70 × 2.0		15	344617	o. r.
ASME BPE							
A (CF A) see control functions 1.)	½	50 (D)	12.7 × 1.65	4.1	16	344549	344547
	¾	50 (D)	19.05 × 1.65	4.1	11	344726	o. r.
	1	63 (E)	25.4 × 1.65	4.5	11	345476	344879
	1½	80 (F)	38.1 × 1.65	5	9	344553	o. r.
	2	100 (G)	50.8 × 1.65	4.4	7.2	344727	o. r.
B (CF B) see control functions 1.)	½	50 (D)	12.7 × 1.65	See diagrams 2.)	16	344550	364483
	¾	50 (D)	19.05 × 1.65		16	344583	o. r.
	1	63 (E)	25.4 × 1.65		25	183280	o. r.
	1½	63 (E)	38.1 × 1.65		25	344554	o. r.
	2	63 (E)	50.8 × 1.65		13	344630	o. r.

o. r. = on request

1.) For more information, refer to the chapter "3. Control functions" on page 7.

2.) See diagrams in chapter "Pilot pressure diagrams with flow direction below seat (control function B, seat seal PTFE)" on page 20

DTS 1000444947 EN Version: AD Status: RL (released | freigegeben | valide) printed: 28.04.2026

valvesgo.com

Valve with flow direction above seat

The following tables refer to valves with stainless steel body, n actuator of PA and Ra inside from ≤ 3.2 µm.

Control function	Nominal diameter (port connection)	Actuator size Ø	Port connection Pipe Ø	Pilot pressure min.	Operating pressure max.	Article no.	
						PA actuator	PPS actuator
	NPS	[mm]	[mm]	[bar(g)]	[bar(g)]		
DIN EN ISO 1127 / ISO 4200							
A (CF A) see control functions 1.)	15	50 (D)	21.3 × 1.6	See diagrams 2.)	16	344402	352370
	20	50 (D)	26.9 × 1.6		16	344401	o. r.
	25	63 (E)	33.7 × 2		16	344400	352457
	32	63 (E)	42.4 × 2		16	344397	o. r.
	40	63 (E)	48.3 × 2		16	344398	344480
	50	63 (E)	60.3 × 2.0		16	345014	o. r.
	65	80 (F)	76.1 × 2.3		14	345146	o. r.
DIN 11850 - 2							
A (CF A) see control functions 1.)	15	50 (D)	19 × 1.5	See diagrams 2.)	16	342493	344582
	20	50 (D)	23 × 1.5		16	344534	344863
	25	63 (E)	29 × 1.5		16	344535	352203
	32	63 (E)	35 × 1.5		16	344536	352390
	40	63 (E)	41 × 1.5		16	344537	352207
	50	63 (E)	53 × 1.5		16	341778	352461
	65	80 (F)	70 × 2.0		14	344625	367783
ASME BPE							
A (CF A) see control functions 1.)	½	50 (D)	12.7 × 1.65	See diagrams 2.)	16	344728	o. r.
	¾	50 (D)	19.05 × 1.65		16	344729	o. r.
	1	63 (E)	25.4 × 1.65		16	344730	344556
	1½	63 (E)	38.1 × 1.65		16	344731	o. r.
	2	63 (E)	50.8 × 1.65		16	344602	o. r.

o. r. = on request

1.) For more information, refer to the chapter "3. Control functions" on page 7.

2.) See diagrams in chapter "Pilot pressure diagram with flow direction above seat (control function A, seat seal PTFE)" on page 22

Further variants on request

Approval
Food processing, drinking water, oxygen, fuel gases, explosion protection

Pressure
Other variants for operating pressures up to 25 bar(g)
Vacuum variant down to - 0.9 bar(g)

Material
Seal: NBR, FKM, EPDM

Temperature
High temperature variant up to + 230 °C
Hot water variant up to + 200 °C
Low temperature variant down to - 40 °C

Process connection
Clamp connection, threaded connection

DTS 1000444947 EN Version: AD Status: RL (released | freigegeben | valide) printed: 28.04.2026

valvesgo.com

10.6. Ordering chart clamp connection

Valve with flow direction below seat

Note:
The following tables refer to valves with stainless steel body.

Control function	Nominal diameter (port connection)	Actuator size Ø	Port connection external Ø	Pilot pressure min.	Operating pressure max.	Article no.	
						PA actuator	PPS actuator
	DN	[mm]	[mm]	[bar(g)]	[bar(g)]		
ISO 2852							
A (CF A) see control functions 1.)	15	50 (D)	34.0	4.1	16	345128	o. r.
	20	50 (D)	50.5	4.1	11	345129	o. r.
	25	63 (E)	50.5	4.2	11	345130	344574
	32	80 (F)	50.5	5	14	345131	o. r.
	40	80 (F)	64.0	5	9	345132	o. r.
	50	100 (G)	77.5	4.4	7.2	345133	o. r.
B (CF B) see control functions 1.)	15	50 (D)	34.0	See diagrams 2.)	16	363929	o. r.
	20	50 (D)	50.5		16	345134	o. r.
	25	50 (D)	50.5		16	363930	o. r.
	32	63 (E)	50.5		16	363933	o. r.
	40	63 (E)	64.0		16	363940	o. r.
	50	63 (E)	77.5		13	363942	o. r.
ASME BPE							
A (CF A) see control functions 1.)	½	50 (D)	25.0	4.1	16	344632	o. r.
	¾	50 (D)	25.0	4.1	11	344633	o. r.
	1	63 (E)	50.5	4.2	11	344634	o. r.
	1½	80 (F)	50.5	5	9	344635	o. r.
	2	100 (G)	64.0	4.4	7.2	344636	o. r.
B (CF B) see control functions 1.)	½	50 (D)	25.0	See diagrams 2.)	16	o. r.	o. r.
	¾	50 (D)	25.0		16	o. r.	o. r.
	1	50 (D)	50.5		16	o. r.	o. r.
	1½	63 (E)	50.5		16	o. r.	o. r.
	2	63 (E)	64.0		13	o. r.	o. r.

o. r. = on request
1.) For more information, refer to the chapter "3. Control functions" on page 7.
2.) See diagrams in chapter "Pilot pressure diagrams with flow direction below seat (control function B, seat seal PTFE)" on page 20

DTS 1000444947 EN Version: AD Status: RL (released | freigegeben | valide) printed: 28.04.2026

valvesgo.com

Valve with flow direction above seat

Control function	Nominal diameter (port connection)	Actuator size Ø	Port connection external Ø	Pilot pressure min.	Operating pressure max.	Article no.	
						PA actuator	PPS actuator
	DN	[mm]	[mm]	[bar(g)]	[bar(g)]		
ISO 2852							
A (CF A) see control functions [1.)]	15	50 (D)	34.0	See diagrams [2.)]	16	345135	345145
	20	50 (D)	50.5		16	345136	o. r.
	25	63 (E)	50.5		16	345137	o. r.
	32	63 (E)	50.5		16	345138	o. r.
	40	63 (E)	64.0		16	345139	o. r.
	50	63 (E)	77.5		16	345140	431027
ASME BPE							
A (CF A) see control functions [1.)]	½	50 (D)	25.0	See diagrams [2.)]	16	344721	o. r.
	¾	50 (D)	25.0		16	344722	o. r.
	1	63 (E)	50.5		16	344723	o. r.
	1½	63 (E)	50.5		16	344724	o. r.
	2	63 (E)	64.0		16	344725	o. r.

o. r. = on request

1.) For more information, refer to the chapter "3. Control functions" on page 7.

2.) See diagrams in chapter "Pilot pressure diagram with flow direction above seat (control function A, seat seal PTFE)" on page 22

Further variants on request

Approval
Food processing, drinking water, oxygen, fuel gases, explosion protection

Pressure
Other variants for operating pressures up to 25 bar(g)
Vacuum variant down to - 0.9 bar(g)

Material
Seal: NBR, FKM, EPDM

Temperature
High temperature variant up to + 230 °C
Hot water variant up to + 200 °C
Low temperature variant down to - 40 °C

Process connection
Clamp connection acc. to DIN 32676, welded connection, threaded connection

DTS 1000444947 EN Version: AD Status: RL (released | freigegeben | valide) printed: 28.04.2026

valvesgo.com

valvesgo.com

10.7. Ordering chart accessories

Accessories for 3/2-way pilot valves with banjo bolts

Note:

- Seal material FKM / NBR
- For complete program, see data sheet **Type 7012** ▸, **Type 6014** ▸, **Type 2507** ▸, **Type 2518** ▸

Valves for actuator size Ø	Type	Pilot air port	Working port (banjo bolt)	Q_{Nn} value air	Pressure range	Electrical coil connection Industry standard	Power consumption	Article no.			
								Voltage/Frequency		Cable plug	
								024 V/DC	230 V/50	12...24 AC/DC with LED	0...250 AC/DC
[mm]				[l/min]	[bar(g)]		[W]	[V]	[V]	[V]	[V]
40 (C)	7012	Thread G ¼	Thread G ⅛	48	0...10	Type 2507 Form B	4	20077598	20077609	423849	423845
		Push-in connector Ø 6 mm						20087641	20096098		
50 (D)... 63 (E)		Thread G ¼	Thread G ¼					20077514	20077519		
		Push-in connector Ø 6 mm						20087628	20092512		
50 (D)... 125 (H)	6014	Thread G ¼	Thread G ¼	120	0...10	Type 2518 Form A	8	334870	389550	314812	314802

valvesgo.com

DTS 1000444947 EN Version: AD Status: RL (released | freigegeben | valide) printed: 28.04.2026

valvesgo.com