bürkert
FLUID CONTROL SYSTEMS

MAN 1000751247 EN Version: A Status: RL (released | freigegeben) printed: 17.08.2026

Type 2104
ELEMENT
T-way diaphragm valve with pneumatic actuator, stainless steel for decentralised automation

Operating Instructions

valvesgo.com

MAN 1000751247 EN Version: A Status: RL (released | freigegeben) printed: 17.08.2026

valvesgo.com

We reserve the right to make technical changes without notice.
© Bürkert Werke GmbH & Co. KG 2008-2026
Technical documentation 2607/00_GBen__1449149195_9007200704181899 / Original DE

Table of contents

1	**About this document**	**5**
1.1	Symbols	5
1.2	Terms and abbreviations	6
1.3	Manufacturer	6
2	**Safety**	**7**
2.1	Intended use	7
2.2	Safety instructions	7
3	**Product description**	**11**
3.1	Product overview	11
3.2	Product identification	13
3.2.1	Type label	13
3.2.2	Labelling on block material valve body	13
3.2.3	Determination of actuator size	14
3.3	Functionality	14
3.4	Control electronics	15
4	**Technical data**	**16**
4.1	Standards and directives	16
4.2	Operating conditions	16
4.2.1	Permissible temperatures	16
4.2.2	Pressure ranges for 2/2-way valve	18
4.2.3	Pressure ranges for 2/3-way valve	29
4.3	General technical data	31
5	**Installation**	**32**
5.1	Notes on installation	32
5.2	Installation position	32
5.3	Weld the valve body into the pipeline	34
5.4	Removing the actuator from the valve body	35
5.5	Installing the actuator on the valve body	36
5.5.1	Control function A: Installing the actuator on the valve body	36
5.5.2	Control functions B and I: Installing the actuator on the valve body	38
5.6	Aligning the actuator	40
5.7	Compressor	41
6	**Additional information for devices with 3-A approval (code PE05)**	**42**
6.1	Safety instructions for installation and maintenance	42
6.1.1	Removing the compressor for diaphragm sizes 15–25	42
6.1.2	Removing the compressor for diaphragm sizes 32...80	43
7	**Pneumatic connection**	**44**
7.1	Connecting the device pneumatically	44
8	**Commissioning**	**46**
8.1	Commission the device	46
8.2	Setting the middle position on 3-position actuator	46
9	**Maintenance**	**48**
9.1	Actuator	48

MAN 1000751247 EN Version: A Status: RL (released | freigegeben) printed: 17.08.2026

valvesgo.com

valvesgo.com

9.2 Wearing parts 48
9.3 Inspection intervals 48
9.4 Service life of the diaphragm 49
9.5 Cleaning 49

10 Repair 50

10.1 Replacing the diaphragm 50
10.1.1 Control function A: Replacing the diaphragm 51
10.1.2 Control functions B and I: Replacing the diaphragm 53
10.1.3 Switching between PTFE diaphragm and EPDM diaphragm 55

11 Troubleshooting 57

11.1 Actuator does not switch 57
11.2 Valve is not tight 57
11.3 Flow rate reduced 57

12 Disassembly 58

13 Spare parts 59

13.1 Diaphragm 59
13.2 Additional Information 61

14 Logistics 62

14.1 Transport and storage 62
14.2 Return 62
14.3 Disposal 62

15 Appendix 63

15.1 Storage of elastomer parts 63

MAN 1000751247 EN Version: A Status: RL (released | freigegeben) printed: 17.08.2026

valvesgo.com

valvesgo.com

1 About this document

The document is an important part of the product and guides the user to safe installation and operation. The information and instructions in this document are binding for the use of the product.

- Before using the product for the first time, read and observe the whole safety chapter.
- Before starting any work on the product, read and observe the respective sections of the document.
- Keep the document available for reference and give it to the next user.
- Contact the Bürkert sales office for any questions.

Further information concerning the product at Products.

- Enter the article number from the type label in the search bar.

The illustrations in these instructions may vary depending on the product variant.

1.1 Symbols

DANGER!

Warns of a danger that leads to death or serious injuries.

WARNING!

Warns of a danger that can lead to death or serious injuries.

CAUTION!

Warns of a danger that can lead to minor injuries.

NOTICE!

Warns of property damage on the product or the installation.

Indicates important additional information, tips and recommendations.

Refers to information in this document or in other documents.

- Indicates a step to be carried out.

✓ Indicates a result.

Menu Indicates a software user-interface text.

MAN 1000751247 EN Version: A Status: RL (released | freigegeben) printed: 17.08.2026

valvesgo.com

1.2 Terms and abbreviations

The terms and abbreviations are used in this document to refer to following definitions.

Device	Diaphragm valve Type 2104
DS	Diaphragm size
Operating pressure	Pressure at which the operating medium is present in the pipeline during system operation and flows through the valve.
Pilot pressure	Pressure used for the control or pilot control of a valve to change its switching position.
bar, bar (g)	Unit for relative pressure
Ex area	Potentially explosive atmosphere
Ex approval	Approval for potentially explosive atmosphere

1.3 Manufacturer

Bürkert Fluid Control Systems

Christian-Bürkert-Str. 13–17

74653 Ingelfingen

GERMANY

The contact addresses are available at Contact.

Need more information or additional products?

- Explore the full range of products on our eShop.

Service and support

Direct contact with Bürkert service.

MAN 1000751247 EN Version: A Status: RL (released | freigegeben) printed: 17.08.2026

valvesgo.com

valvesgo.com

2 Safety

2.1 Intended use

The device is designed to control the flow of media. The permissible media are listed in chapter Technical data [▸ 16]

Prerequisites for safe and trouble-free operation are proper transport, storage, installation, commissioning, operation and maintenance.

The instructions are part of the device. The device is intended exclusively for use within the scope of these instructions. Uses of the device that are not described in these instructions, the contractual documents or the type label can lead to severe personal injury or death, damage to the device or property and dangers for the surrounding area or the environment.

- Only use the device for media that do not attack the body and seal materials. Information on the chemical resistance of materials in contact with media is available in the Bürkert resistApp.
- Protect the device against electromagnetic interference, UV rays and, when installed outdoors, the effects of climatic conditions.
- Only trained and qualified personnel may install, operate and maintain the device. See qualification of persons in Safety instructions [▸ 7]
- Use the device only in conjunction with third-party devices and components recommended and authorized by Bürkert.
- Use the device only when it is in perfect condition.
- Observe the Operating conditions temperature ranges listed.

2.2 Safety instructions

Qualification of personnel working with the device

Improper use of the device can lead to serious personal injury or death. To avoid accidents when working with the device, the following minimum requirements must be met:

- Understand the instructions and implement the information contained therein accordingly.
- Detect and avoid dangers when working on the device.
- Safely carry out work on the device within the scope of these instructions.

Responsibility of the operator

The operator is responsible for observing the location-specific safety regulations, also in relation to personnel.

- Observe the general rules of technology.
- Install the device according to the regulations applicable in the respective country.
- The operator must make hazards arising from the location of the device avoidable by providing appropriate operating instructions.

Technical limit values and media

Non-compliance with technical limit values or unsuitable media can damage the device and lead to leaks. This can cause accidents and seriously injure or kill people.

MAN 1000751247 EN Version: A Status: RL (released | freigegeben) printed: 17.08.2026

valvesgo.com

- Comply with limit values. See Technical data [▸ 16] and information on the type label.
- Only feed media into the media ports that are listed in the chapter Technical data [▸ 16].
- Observe the safety data sheet for the media used.

Working on the device

Working on the device that has not been powered down, unauthorised switching on or uncontrolled start-up of the system can cause accidents. This can lead to serious personal injury or death.

- Only work on the device when it is not in use.
- Ensure that the device or system cannot be switched on unintentionally.
- Only start the process in a controlled manner following disruptions. Observe sequence:
  1. Apply supply voltage or pneumatic supply.
  2. Charge the device with medium.

Changes and other modifications, spare parts and accessories

Changes to the device, incorrect installation or use of non-approved devices or components create hazards that can lead to accidents and injuries.

- Do not make any changes to the device.
- Do not mechanically load the device.
- Observe the operating instructions of the device or component used.
- Only use the devices in conjunction with devices and components recommended or approved by Bürkert.

Spare parts and accessories that do not meet Bürkert's requirements may impair the operational safety of the device and cause accidents.

- To ensure operational safety, only use original parts from Bürkert.

Operation only after proper transport, storage, installation, commissioning, or maintenance

Improper transport, storage, installation, commissioning, or maintenance jeopardises the operational safety of the device and can cause accidents. This can lead to serious personal injury or death.

- Observe all values and limits specified in these instructions to ensure the device's safety and functionality.
- Only carry out work described in these instructions.
- Only carry out work using suitable tools.
- All other work must be carried out by Bürkert only.

Medium under pressure

Medium under pressure can seriously injure people. In the event of overpressure or pressure surges, the device or lines can burst. Pneumatic lines that are defective or not securely fastened can come loose and swing around.

- Before working on the device or system, switch off the pressure. Vent or empty the lines.
- Adhere to the permitted pressure ranges of the medium.
- Comply with the permitted temperature ranges of the medium.

MAN 1000751247 EN Version: A Status: RL (released | freigegeben) printed: 17.08.2026

valvesgo.com

Electric shock due to electrical components

Touching live parts can result in severe electric shock. This can lead to serious personal injury or death.

- Before working on the device or system, switch off the power supply. Secure it against reactivation.
- Observe any applicable accident prevention and safety regulations for electrical devices.

Contaminated pilot air

The control exhaust air of the device can be contaminated with lubricants and damage the health of people and the environment.

- Dissipate control exhaust air appropriately.
- Wear appropriate personal protective equipment when working near the device.

If exhaust air from other processes is used to generate compressed air for the device, seals may be destroyed by the media contained in the exhaust air and cause medium to escape.

- Only use fresh air for generating compressed air for the device.

Only use authorised devices in potentially explosive atmospheres

Devices that may be used in potentially explosive atmospheres are labelled with an Ex marking. Additional instructions with Ex labelling are included with these devices.

- Only use devices that are approved for use in a potentially explosive atmosphere.
- For use in potentially explosive atmospheres, observe the information on the device.
- For use in potentially explosive atmospheres, observe the additional instructions with Ex labelling.
- Do not use devices that do not have this Ex labelling and additional instructions in potentially explosive atmospheres under any circumstances.

Danger due to escaping medium

If the diaphragm is worn, medium can escape and seriously injure people.

- The relief bore must be regularly inspected for any medium leakages.
- If medium is leaking from the relief bore, replace the diaphragm.
- If the media is hazardous, protect the area surrounding the discharge point against dangers.

Hearing damage due to high noise level

Depending on the operating conditions, the device may generate loud noises.

- If the noise level exceeds 75 dB(A), wear hearing protection when near the device.

Hot surfaces and fire hazard

The surface of the device can become hot with fast-switching actuators or with hot media.

- Wear suitable protective gloves.
- Keep highly flammable substances and media away from the device.

Heavy device

During transportation or installation works, heavy devices may fall and cause injuries.

- Secure heavy device to keep it from tipping or falling over.

MAN 1000751247 EN Version: A Status: RL (released | freigegeben) printed: 17.08.2026

valvesgo.com

- If necessary, only transport, install and uninstall heavy device with the help of a second person.
- Use suitable tools.

Mechanical moving parts

- Do not reach into openings.

Actuators with control function A (CF A) or control function B (CF B) contain a preloaded spring. Opening the actuator may cause injury due to the spring snapping out.

- Do not open the actuator.
- Operate 3-position actuator with transparent cap only.

Information on the Pressure Equipment Directive

Bürkert devices are categorised according to the maximum permissible medium pressure indicated on the type label, the nominal diameter DN of the port connection or the included volume, and usually for compressible fluid group 1. Exceptions are documented separately.

On the type label for Bürkert devices, the permissible medium pressure is marked with Pmed, which corresponds to the PS value in the Pressure Equipment Directive. This value can be distinguished from PN or pilot pressure, for example.

In the case of devices marked with PN, the maximum permissible medium pressure can also be restricted through pressure derating based on material or temperature.

Pressure equipment that is not in any category is designed and manufactured in accordance with good engineering practice. These devices do not receive a CE marking or EU Declaration of Conformity under the Pressure Equipment Directive.

- Ensure that the media used are compatible with the device materials and do not significantly reduce the strength of pressurised components or make the device materials brittle.
- Assign the system to a pressure equipment category according to specific operating data.

MAN 1000751247 EN Version: A Status: RL (released | freigegeben) printed: 17.08.2026

valvesgo.com

3 Product description

The diaphragm valve is an externally controlled valve with a pneumatic piston actuator and diaphragm seal.

It uses neutral gases or air to control the flow of media.

The valve is self-draining when in the appropriate installation position.

3.1 Product overview

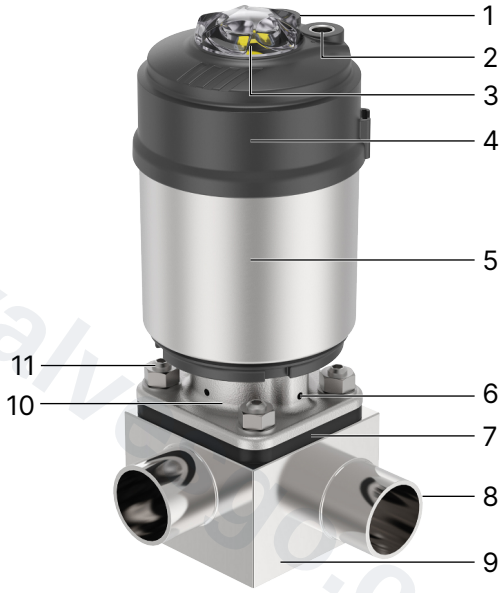

Fig. 1: Product overview of T-valve Type 2104

1	Pilot air port 1 for CF A, CF B and CF I	2	Pilot air port 2 for CF I, exhaust port for CF A and CF B
3	Transparent cap with position	4	Actuator cover
5	Actuator housing	6	Relief bore
7	Diaphragm	8	Port connection
9	Valve body	10	Diaphragm bonnet
11	Body screw		

MAN 1000751247 EN Version: A Status: RL (released | freigegeben) printed: 17.08.2026

valvesgo.com

Fig. 2: Product overview of 3-position actuator

1	Transparent cap	2	Locknut
3	Nut for setting the middle position	4	Actuator cover
5	Actuator housing	6	Pilot air port 1 for CF A (open valve)
7	Pilot air port 2 for CF A (middle position)		

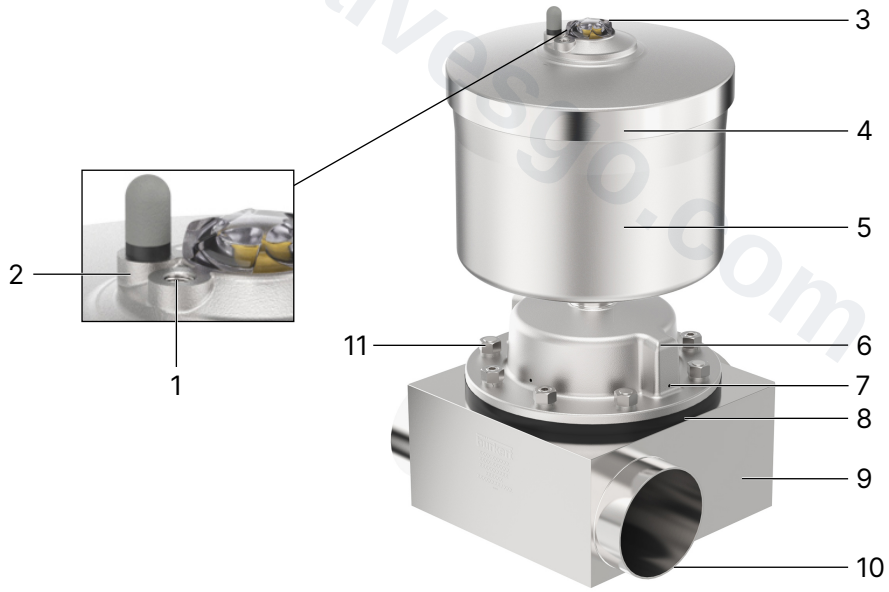

Fig. 3: Product overview of T-valve Type 2104 with stainless steel actuator 225

1	Pilot air port 1 for CF A, CF B and CF I	2	Pilot air port 2 for CF I, exhaust port for CF A and CF B
3	Transparent cap with position	4	Actuator cover
5	Actuator housing	6	Diaphragm bonnet
7	Relief bore	8	Diaphragm
9	Port connection	10	Valve body
11	Body screw		

MAN 1000751247 EN Version: A Status: RL (released | freigegeben) printed: 17.08.2026

valvesgo.com

3.2 Product identification

3.2.1 Type label

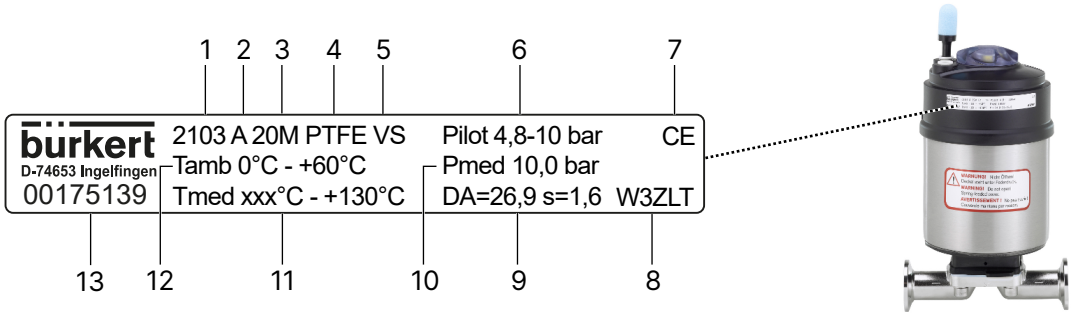

Fig. 4: Description of the type label (example)

1	Type	2	Control function
3	Diaphragm size (number) / actuator size (letter)	4	Diaphragm material
5	Valve body material	6	Pilot pressure
7	CE marking	8	Manufacture code
9	Port connection main dimensions	10	Operating pressure
11	permitted medium temperature	12	permitted ambient temperature
13	Article number		

3.2.2 Labelling on block material valve body

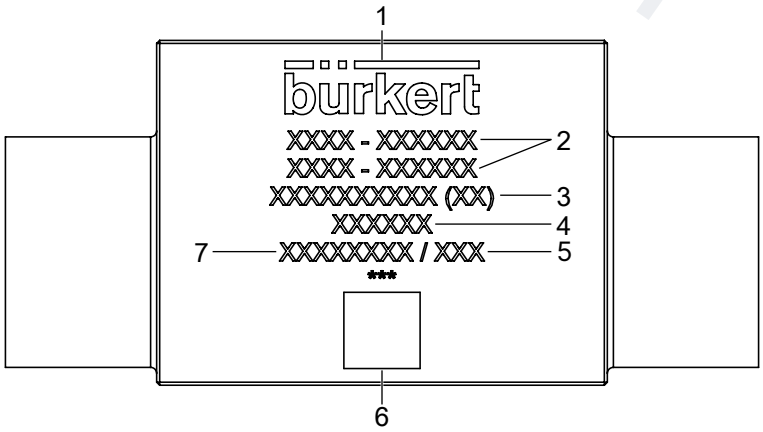

Fig. 5: Labelling on block material valve body

1	Manufacturer	2	Nominal diameter and pipe dimensions
3	Material	4	Batch number
5	Serial number	6	Data matrix code
7	Production number		

MAN 1000751247 EN Version: A Status: RL (released | freigegeben) printed: 17.08.2026

valvesgo.com

3.2.3 Determination of actuator size

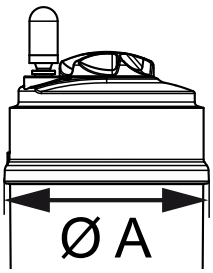

Fig. 6: Determination of actuator size based on the outer diameter A of the actuator cover

Ø A [mm]	Corresponds to actuator size
64.5	50 (D)
91	70 (M)
120	90 (N)
159	130 (P)
245	225 (L)

Tab. 1: Determination of actuator size

3.3 Functionality

Depending on the control function, spring force (CF A) or pneumatic pilot pressure (CF B, CF I) generates the closing force.

A spindle connected to the actuator piston transfers the force to the compressor, which presses the diaphragm against the weir in the valve body.

Symbol	Description
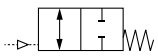	**Control function A (CF A)** Pneumatically operated T-valve Closed by spring force in rest position
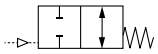	**Control function B (CF B)** Pneumatically operated T-valve Opened by spring force in rest position
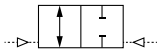	**Control function I (CF I)** Double-acting pneumatically operated T-valve Switching position dependent on external control unit

Tab. 2: Control function

MAN 1000751247 EN Version: A Status: RL (released | freigegeben) printed: 17.08.2026

valvesgo.com

valvesgo.com

2/3-way valve

Symbol	Description
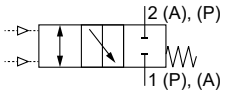	**Control function A (CF A)** Pneumatically operated 2/3-way valve Bidirectional Closed by spring force in rest position

Tab. 3: Control function

3.4 Control electronics

The diaphragm valve can be combined with the following control units:

Type	Product	Actuator size
8690	Pneumatic control unit	70 (M)...225 (L)
8697	Pneumatic control unit	50 (D)
8691	Control head	70 (M)...225 (L)
8695	Control head	50 (D)
8692	Positioner	70 (M)...225 (L)
8693	Process controller	70 (M)...225 (L)
8694	Positioner	70 (M)...225 (L)
8696	Positioner	50 (D)

valvesgo.com

MAN 1000751247 EN Version: A Status: RL (released | freigegeben) printed: 17.08.2026

valvesgo.com

4 Technical data

4.1 Standards and directives

This product complies with the legal requirements applicable at the time of placing on the market and has been developed and tested in accordance with the relevant European directives/regulations and harmonized standards. The conformity is documented and, if necessary, supported by evidence. The EU Declaration of Conformity can be found behind the respective type on the home page country.burkert.com

4.2 Operating conditions

Medium	Neutral gases and liquids, ultrapure, sterile, aggressive or abrasive media (Information on the chemical resistance of materials in contact with media is available in the Bürkert resistApp)
Control medium	Neutral gases, air
Application environment	Indoors and outdoors. Protect the device against electromagnetic interference, UV rays and, when installed outdoors, the effects of climatic conditions.
Altitude	Up to 2000 m above sea level
Storage temperature	See Storage of elastomer parts [▶ 63]

4.2.1 Permissible temperatures

When using a pilot valve or a control unit mounted on the actuator, observe their permissible temperature ranges.

Ambient temperature

Actuator housing material	Actuator size	Permissible ambient temperature [°C]
PPS	50 (D)	−10...+60[1)] −10...+100[2)]
	70 (M)	
	90 (N)	
	130 (P)	

1) Pilot air connector as push-in connector

2) Pilot air connector as threaded bushings

MAN 1000751247 EN Version: A Status: RL (released | freigegeben) printed: 17.08.2026

valvesgo.com

Actuator housing material	Actuator size	Permissible ambient temperature [°C]
Stainless steel	225 (L)	–10...+100

Tab. 4: Permissible ambient temperature

Medium temperature

Valve body material	Permissible medium temperature [°C]
Stainless steel	–10...+150

Tab. 5: Permitted medium temperature

Medium temperature for diaphragms

The specified medium temperatures only apply to media that do not attack the diaphragm materials or cause it to swell up. The behaviour of the medium with respect to the diaphragm may be changed by the medium temperature. The functional properties and, in particular, the service life of the diaphragm can deteriorate as the medium temperature rises.

Do not use the diaphragms as a steam shut-off element.

Diaphragm material	Medium temperature [°C]	Comments
EPDM (AD)	–10...+143	Steam sterilisation[3)] max. +150°C for 60 min
FKM (FF)	0...+130	No steam, dry heat max +150°C for 60 min
PTFE (EA)	–10...+130	Steam sterilisation[3)]max. +140°C for 60 min
Advanced PTFE (EU)	–5...+143	Steam sterilisation[3)] max. +150°C for 60 min
GYLON® (ER)	–5...+130	Steam sterilisation[3)]max. +140°C for 60 min

Tab. 6: Medium temperatures for diaphragms

3) Extending the sterilisation period is permitted but may affect the service life and maintenance intervals.

MAN 1000751247 EN Version: A Status: RL (released | freigegeben) printed: 17.08.2026

valvesgo.com

4.2.2 Pressure ranges for 2/2-way valve

4.2.2.1 Pilot pressure

WARNING!

Risk of bursting due to overpressure

If the device bursts, escaping media may cause injuries, burns or scalds.

- Observe the values indicated on the type label.

NOTICE!

Malfunction due to incorrect pilot pressure

Valves with reduced spring force require reduced pilot pressure. The required values can be found on the type label.

- Observe the values indicated on the type label.
- Please contact the Bürkert sales department with any questions.

Pilot air port

The following pilot air ports can be used:

Actuator size	Standard	Optional
50 (D)...130 (P)	Push-in connector for outer diameter 6 mm or 1/4"	G 1/8
225 (L)	G 1/8	–

Pilot pressure for valves with pneumatic positioner

Actuator size	Pilot pressure [bar]
50 (D)	5.5...7
70 (M)	
90 (N)	
130 (P)	
225 (L) CF A	5.5...7
225 (L) CF B	3...5

Tab. 7: Pilot pressure for valves with pneumatic positioner

Maximum pilot pressure for valves without pneumatic positioner

Actuator size	Actuator material	Maximum permitted pilot pressure [bar]
50 (D)	PPS	10
70 (M)		
90 (N)		
130 (P)		7

MAN 1000751247 EN Version: A Status: RL (released | freigegeben) printed: 17.08.2026

valvesgo.com

Actuator size	Actuator material	Maximum permitted pilot pressure [bar]
225 (L) CF A	Stainless steel	7
225 (L) CF B		5

Tab. 8: Maximum pilot pressure for valves without pneumatic positioner

4.2.2.2 Maximum permissible operating pressure for control function A

The values are valid for valve bodies made from:

- Stainless steel

Diaphragm size	Actuator size	Pilot pressure [bar]	Maximum operating pressure for seal material[4]			
			EPDM, FKM		PTFE, advanced PTFE, GYLON®	
			Dynamic [bar]	Static [bar]	Dynamic [bar]	Static [bar]
8	50 (D)	3.7...10	10	10	10	10
15	50 (D)	5.0...10	7.5	10	–	–
15	70 (M)	4.8...10	10	10	10	10
20	70 (M)	4.8...10	10	10	10	10
25	70 (M)	5.5...10	6.5	10	4.5	6
25	90 (N)	5.0...10	10	10	8	10
40	90 (N)	5.5...10	5.5	7.5	5[5]	6[5]
40	130 (P)	5.0...7	10	10	10	10
50	130 (P)	5.0...7	8	10	7	10
65	130 (P)	5.0...7	5.5	7.5	3.5	5
65	225 (L)	2.7...7	8	10	8[6]	10
80	225 (L)	5.4...7	10	10	8	10
100	225 (L)	5.6...7	8	10	5.5	10[7]

4) In the event of deviations, the pressure values indicated on the type label must be observed.

5) GYLON® (ER diaphragms) is not available.

6) Max. operating pressure for GYLON® (ER diaphragms): 6.5 bar

7) Max. operating pressure for advanced PTFE/EPDM (EU diaphragms): 9 bar

MAN 1000751247 EN Version: A Status: RL (released | freigegeben) printed: 17.08.2026

valvesgo.com

4.2.2.3 Static/dynamic tightness

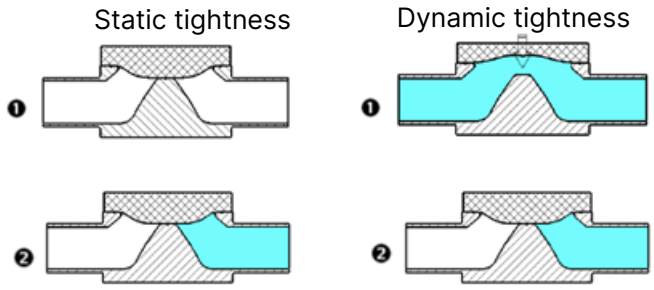

Static tightness

The diaphragm valve is in the closed state and the diaphragm is resting against the valve seat. Pressure is applied to one side of the body seat. At the specified pressure, there is no leak across the body seat.

Dynamic tightness

The medium flows through the open valve, with the outlet side restricted by downstream components. Pressure is applied to both sides of the body seat. The diaphragm valve is closed and seals tightly against the body seat at the specified pressure.

valvesgo.com

MAN 1000751247 EN Version: A Status: RL (released | freigegeben) printed: 17.08.2026

4.2.2.4 Minimum pilot pressure for control function B

The values are valid for valve bodies made from:

- Stainless steel

NOTICE!

Important for the service life of the diaphragm:

- Do not select a pilot pressure that is higher than required.

There are deviating pressure conditions when using the device as a control valve. These are shown in the following diagrams.

Diaphragm material EPDM, FKM

CF B
Diaphragm material EPDM, FKM
Actuator size 50
Diaphragm sizes 8...15

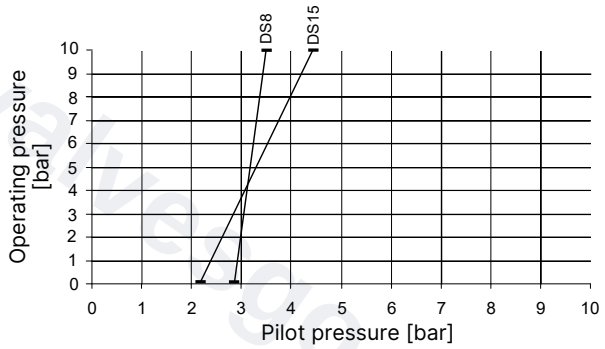

Fig. 7: Control function B, diaphragm material EPDM, FKM, actuator size 50 (D)

CF B
Diaphragm material EPDM, FKM
Actuator size 70
Diaphragm sizes 15...25

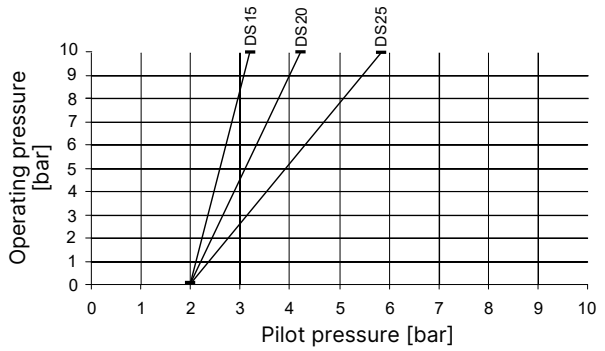

Fig. 8: Control function B, diaphragm material EPDM, FKM, actuator size 70 (M)

MAN 1000751247 EN Version: A Status: RL (released | freigegeben) printed: 17.08.2026

valvesgo.com

CF B
Diaphragm material EPDM, FKM
Actuator size 70
Diaphragm sizes 15...25
Control valve

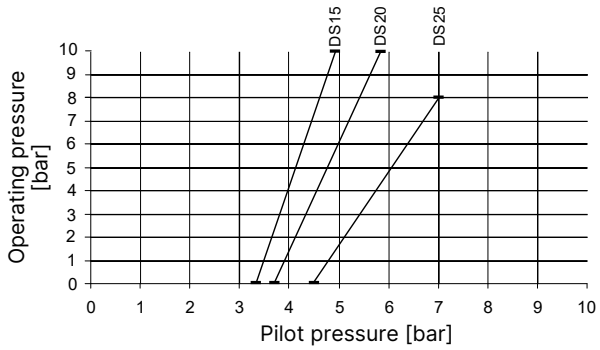

Fig. 9: Control valve, control function B, diaphragm material EPDM, FKM, actuator size 70 (M)

CF B
Diaphragm material EPDM, FKM
Actuator size 90
Diaphragm sizes 25...40

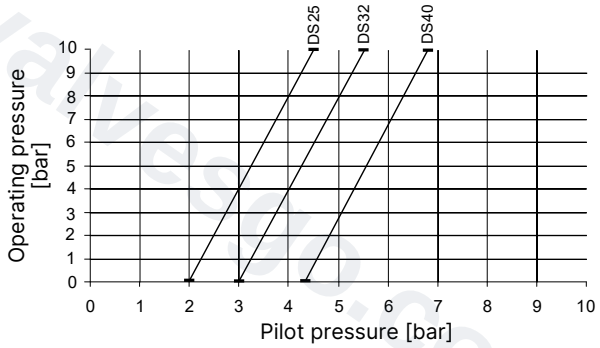

Fig. 10: Control function B, diaphragm material EPDM, FKM, actuator size 90 (N)

CF B
Diaphragm material EPDM, FKM
Actuator size 90
Diaphragm size 25
Control valve

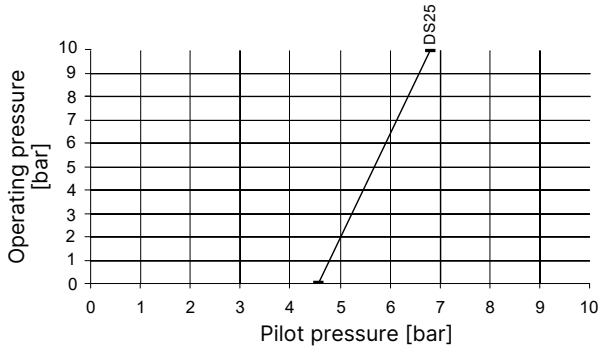

Fig. 11: Control valve, control function B, diaphragm material EPDM, FKM, actuator size 90 (N)

MAN 1000751247 EN Version: A Status: RL (released | freigegeben) printed: 17.08.2026

valvesgo.com

CF B
Diaphragm material EPDM, FKM
Actuator size 130
Diaphragm sizes 40...65

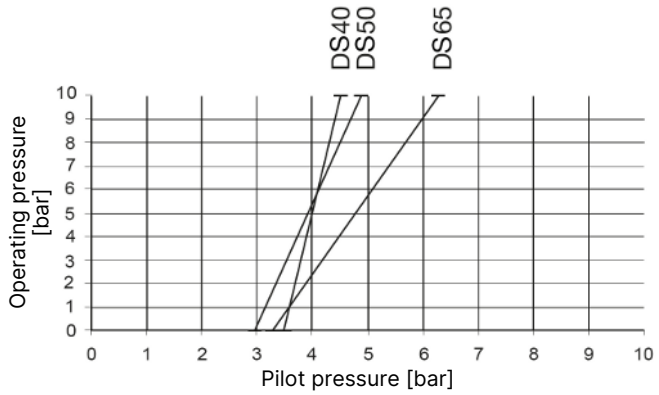

Fig. 12: Control function B, diaphragm material EPDM, FKM, actuator size 130 (P)

CF B
Diaphragm material EPDM, FKM
Actuator size 130
Diaphragm sizes 40...50
Control valve

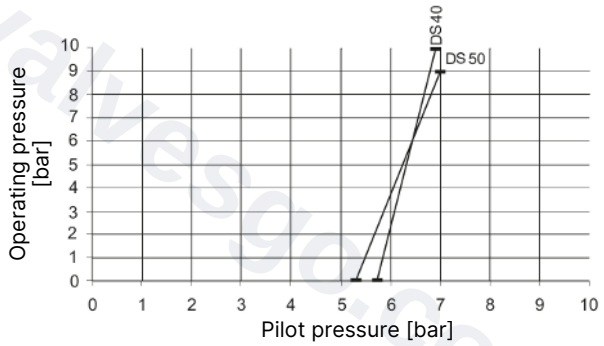

Fig. 13: Control valve, control function B, diaphragm material EPDM, FKM, actuator size 130 (P)

CF B
Diaphragm material EPDM, FKM
Actuator size 225
Diaphragm sizes 65...100

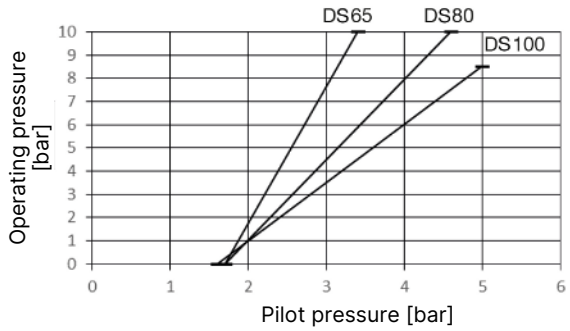

Fig. 14: Control function B, diaphragm material EPDM, FKM, actuator size 225 (L)

MAN 1000751247 EN Version: A Status: RL (released | freigegeben) printed: 17.08.2026

valvesgo.com

Diaphragm material PTFE, advanced PTFE, GYLON®

CF B
Diaphragm material
PTFE, advanced PTFE, GYLON®
Actuator size 50
Diaphragm sizes 8...15

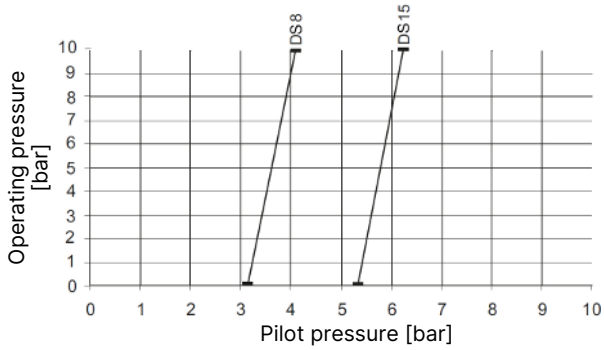

Fig. 15: Control function B, diaphragm material PTFE, advanced PTFE, GYLON®, actuator size 50 (D)

CF B
Diaphragm material
PTFE, advanced PTFE, GYLON®
Actuator size 70
Diaphragm sizes 15...25

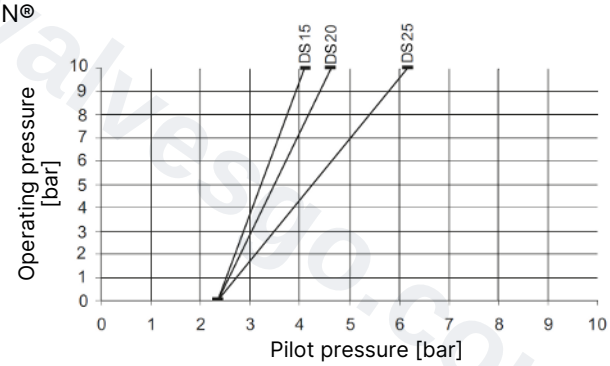

Fig. 16: Control function B, diaphragm material PTFE, advanced PTFE, GYLON®, actuator size 70 (M)

CF B
Diaphragm material
PTFE, advanced PTFE, GYLON®
Actuator size 70
Diaphragm size 15...25
Control valve

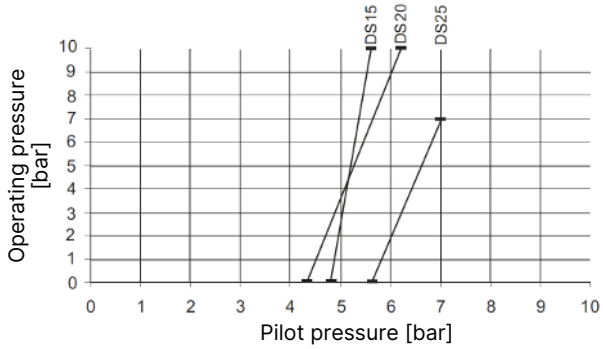

Fig. 17: Control valve, control function B, diaphragm material PTFE, advanced PTFE, GYLON®, actuator size 70 (M)

MAN 1000751247 EN Version: A Status: RL (released | freigegeben) printed: 17.08.2026

valvesgo.com

CF B
Diaphragm material
PTFE, advanced PTFE, GYLON®
Actuator size 90
Diaphragm sizes 25...40

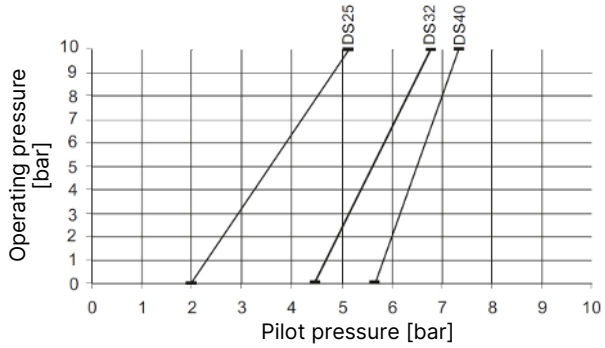

Fig. 18: Control function B, diaphragm material PTFE, advanced PTFE, GYLON®, actuator size 90 (N)

CF B
Diaphragm material
PTFE, advanced PTFE, GYLON®
Actuator size 90
Diaphragm size 25
Control valve

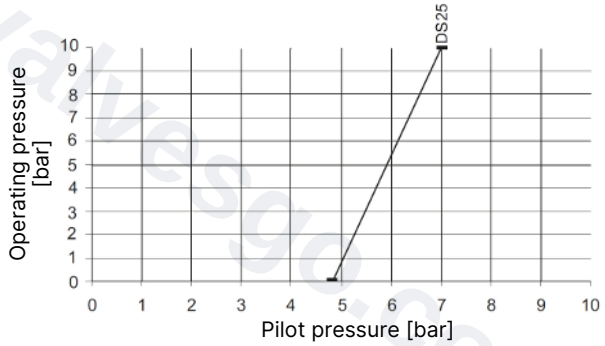

Fig. 19: Control valve, control function B, diaphragm material PTFE, advanced PTFE, GYLON®, actuator size 90 (N)

CF B
Diaphragm material
PTFE, advanced PTFE, GYLON®
Actuator size 130
Diaphragm sizes 40...65

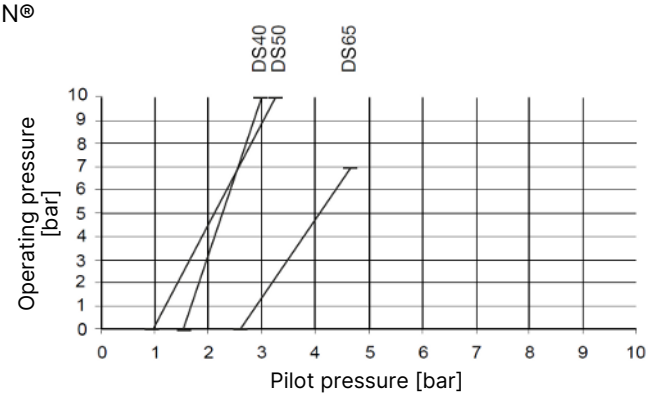

Fig. 20: Control function B, diaphragm material PTFE, advanced PTFE, GYLON®, actuator size 130 (P)

MAN 1000751247 EN Version: A Status: RL (released | freigegeben) printed: 17.08.2026

valvesgo.com

CF B
Diaphragm material
PTFE, advanced PTFE, GYLON®
Actuator size 130
Diaphragm sizes 40...50
Control valve

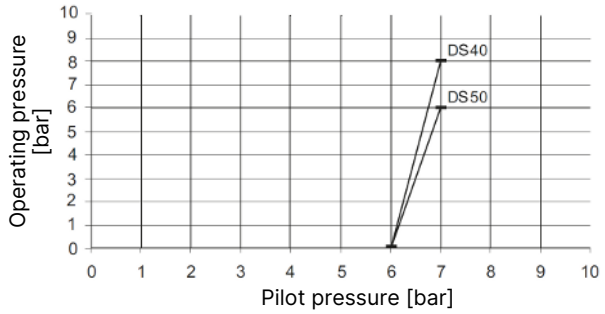

Fig. 21: Control valve, control function B, diaphragm material PTFE, advanced PTFE, GYLON®, actuator size 130 (P)

CF B
Diaphragm material
PTFE, advanced PTFE, GYLON®
Actuator size 225
Diaphragm size 65...100

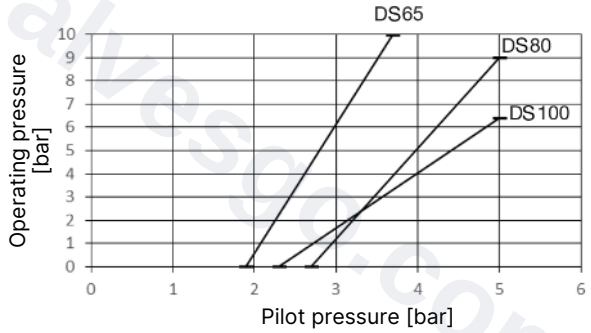

Fig. 22: Control function B, diaphragm material PTFE, advanced PTFE, GYLON®, actuator size 225 (L)

4.2.2.5 Minimum pilot pressure for control function I

The values are valid for valve bodies made from:

- Stainless steel

NOTICE!

Important for the service life of the diaphragm:

- Do not select a pilot pressure that is higher than required.

There are deviating pressure conditions when using the device as a control valve. These are shown in the following diagrams.

MAN 1000751247 EN Version: A Status: RL (released | freigegeben) printed: 17.08.2026

valvesgo.com

Diaphragm material EPDM, FKM

CF I
Diaphragm material EPDM, FKM
Actuator size 50
Diaphragm sizes 8...15

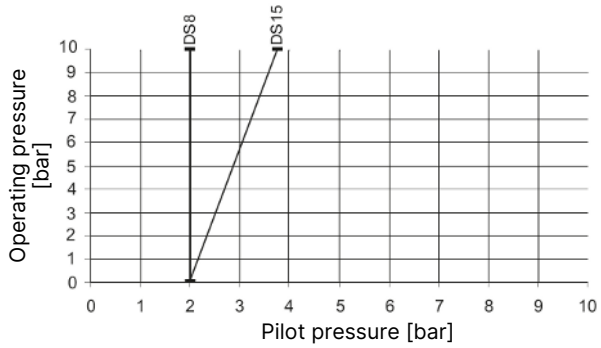

Fig. 23: Control function I, diaphragm material EPDM, FKM, actuator size 50 (D)

CF I
Diaphragm material EPDM, FKM
Actuator size 70
Diaphragm sizes 15...25

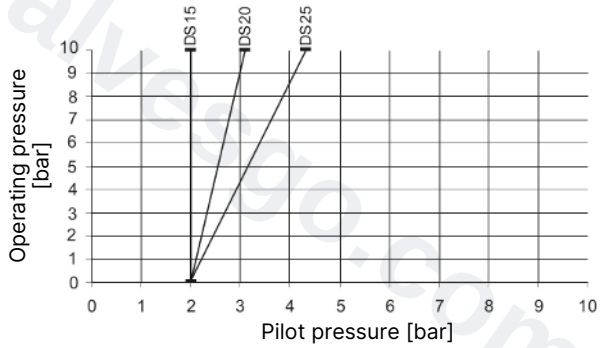

Fig. 24: Control function I, diaphragm material EPDM, FKM, actuator size 70 (M)

CF I
Diaphragm material EPDM, FKM
Actuator size 90
Diaphragm sizes 25...40

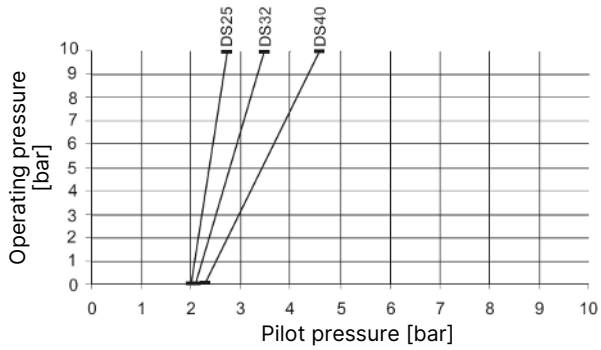

Fig. 25: Control function I, diaphragm material EPDM, FKM, actuator size 90 (N)

MAN 1000751247 EN Version: A Status: RL (released | freigegeben) printed: 17.08.2026

valvesgo.com

CF I
Diaphragm material EPDM, FKM
Actuator size 130
Diaphragm sizes 40...65

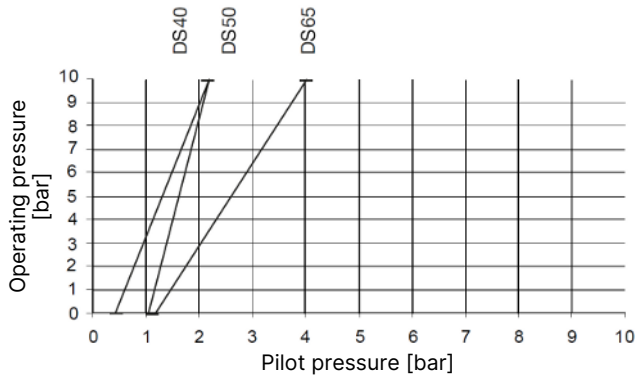

Fig. 26: Control function I, diaphragm material EPDM, FKM, actuator size 130 (P)

PTFE-EPDM diaphragm

CF I
Diaphragm material
PTFE, advanced PTFE, GYLON®
Actuator size 50
Diaphragm size 8...15

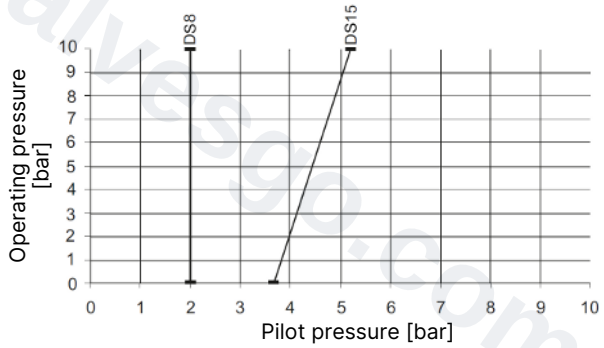

Fig. 27: Control function I, diaphragm material PTFE, advanced PTFE, GYLON®, actuator size 50 (D)

CF I
Diaphragm material
PTFE, advanced PTFE, GYLON®
Actuator size 70
Diaphragm size 15...25

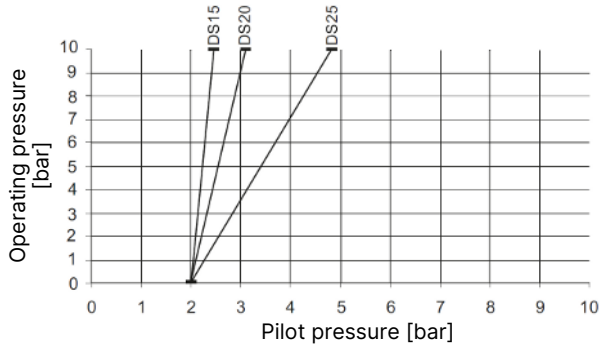

Fig. 28: Control function I, diaphragm material PTFE, advanced PTFE, GYLON®, actuator size 70 (M)

MAN 1000751247 EN Version: A Status: RL (released | freigegeben) printed: 17.08.2026

valvesgo.com

CF I
Diaphragm material
PTFE, advanced PTFE, GYLON®
Actuator size 90
Diaphragm sizes 25...40

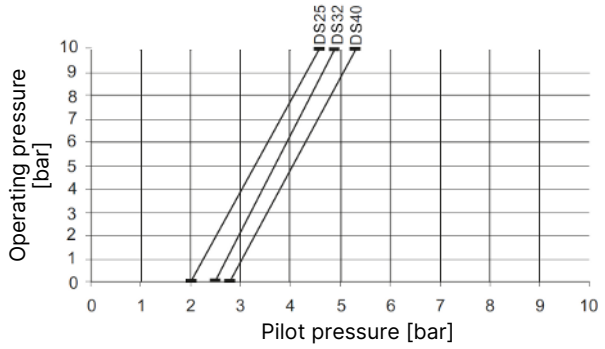

Fig. 29: Control function I, diaphragm material PTFE, advanced PTFE, GYLON®, actuator size 90 (N)

CF I
Diaphragm material
PTFE, advanced PTFE, GYLON®
Actuator size 130
Diaphragm sizes 40...65

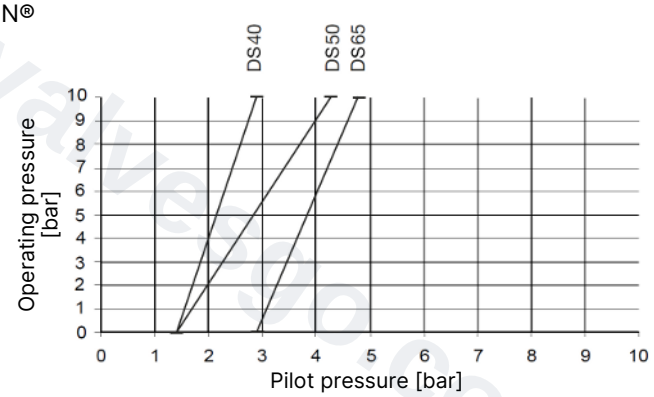

Fig. 30: Control function I, diaphragm material PTFE, advanced PTFE, GYLON®, actuator size 130 (P)

4.2.3 Pressure ranges for 2/3-way valve

4.2.3.1 Pilot pressure

WARNING!

Risk of bursting due to overpressure

If the device bursts, escaping media may cause injuries, burns or scalds.

- Observe the values indicated on the type label.

NOTICE!

Malfunction due to incorrect pilot pressure

Valves with reduced spring force require reduced pilot pressure. The required values can be found on the type label.

- Observe the values indicated on the type label.
- Please contact the Bürkert sales department with any questions.

MAN 1000751247 EN Version: A Status: RL (released | freigegeben) printed: 17.08.2026

valvesgo.com

Maximum pilot pressure

Actuator size [mm]	Actuator material	Pilot pressure [bar]
50 (D)	PPS	7
70 (M)		
90 (N)		

Tab. 9: Maximum pilot pressure

Pilot pressure for control function A

Diaphragm size	Actuator size	Pilot pressure [bar] at operating pressure [bar]	
		0	Maximum
8	50 (D)	4.0	3.7
15	50 (D)	4.5	3.4
15	70 (M)	3.7	3.3
20	70 (M)	3.7	3.3
25	70 (M)	4.1	3.2
25	90 (N)	4.8	3.9

Tab. 10: Pilot pressure for CF A

Variants with lower pilot pressure (reduced spring force) on request.

MAN 1000751247 EN Version: A Status: RL (released | freigegeben) printed: 17.08.2026

valvesgo.com

valvesgo.com

4.2.3.2 Maximum permissible operating pressure for control function A

The values are valid for valve bodies made from:

- Stainless steel

Diaphragm size	Actuator size	Pilot pressure [bar]	Body material	Maximum operating pressure for seal material [8]			
				EPDM, FKM		PTFE, advanced PTFE, GYLON®	
				Dynamic [bar]	Static [bar]	Dynamic [bar]	Static [bar]
8	50 (D)		All	10	10	10	10
15	50 (D)		All	7.5	10	–	–
15	70 (M)		All	10	10	10	10
20	70 (M)		All	10	10	5	6
25	70 (M)		All	6.5	8	–	–
25	90 (N)		All	10	10	8	10

Tab. 11: Maximum permissible operating pressure for control function A

4.3 General technical data

The following technical data is listed on the diaphragm valve type label:

- Control function
- Diaphragm size
- Diaphragm material
- Valve body material
- Pilot pressure
- Operating pressure
- permitted medium temperature
- permitted ambient temperature

Further technical characteristics: enter the article number in the search bar at country.burkert.com and select the product.

[8] In the event of deviations, the pressure values indicated on the type label must be observed.

MAN 1000751247 EN Version: A Status: RL (released | freigegeben) printed: 17.08.2026

valvesgo.com

valvesgo.com

5 Installation

Risk of injury or material damage when working on the device or system.

- Read and observe the chapter Safety [▸ 7] before working on the device or system.

Service and support

- For further information, technical advice and support, contact Bürkert service .

5.1 Notes on installation

NOTICE!

Protect the device against electromagnetic interference, UV rays and, when installed outdoors, the effects of climatic conditions.

- Installation site must be easily accessible and provide sufficient space for installation, disassembly and maintenance.
- Use suitable lifting gear to lift heavy equipment.
- Only lift heavy equipment by the valve body and pneumatic actuator, not by the control unit (if present).
- For pipelines, the inclination angles specified in the valid ASME BPE standard are recommended.
- Support and align pipelines.
- Ensure pipelines are aligned before connection.
- Ensure that pipelines are free of impurities (seal material, metal chips).
- The device and relief bore must be accessible for inspection and maintenance.

5.2 Installation position

Any installation position, preferably with the actuator facing up.

The following installation positions are recommended for the installation of a T-valve bodies in circular pipelines:

For supply of medium

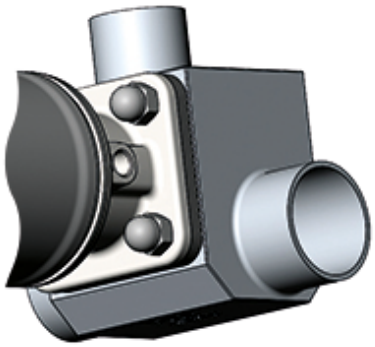

For removal of medium

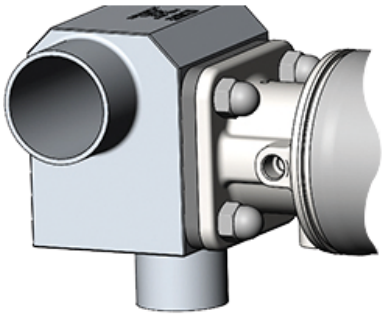

Fig. 31: Recommended installation positions for T-valve bodies in circular pipelines

MAN 1000751247 EN Version: A Status: RL (released | freigegeben) printed: 17.08.2026

valvesgo.com

Installation for leakage detection

One of the relief bores in the diaphragm bonnet for monitoring leakages must be at the lowest position.

MAN 1000751247 EN Version: A Status: RL (released | freigegeben) printed: 17.08.2026

valvesgo.com

5.3 Weld the valve body into the pipeline

NOTICE!

Damage to the diaphragm or the actuator

The diaphragm and actuator can be damaged when welding the valve body into the pipeline.

- In the case of devices with a welded connection, remove the actuator and diaphragm from the valve body before installation.

The installation is divided into the following steps:

1. Removing the actuator from the valve body [▸ 35]
2. Weld the valve body into the pipeline.
   - After welding the surface of the valve body, smooth by sanding if necessary.
   - Clean the valve body carefully.
3. Installing the actuator on the valve body [▸ 36].

valvesgo.com

MAN 1000751247 EN Version: A Status: RL (released | freigegeben) printed: 17.08.2026

valvesgo.com

5.4 Removing the actuator from the valve body

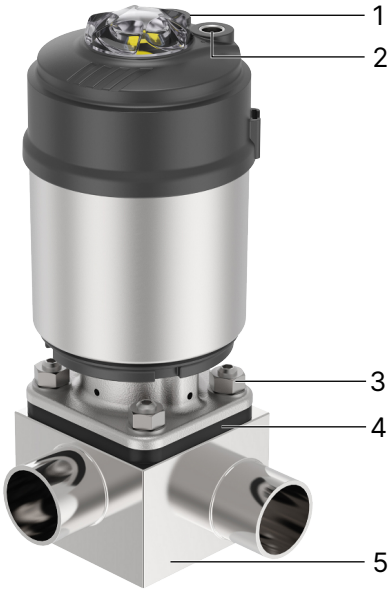

1	Pilot air port 1 for CF A, CF B and CF I	2	Pilot air port 2 for CF I, exhaust port for CF A and CF B
3	Body screw	4	Diaphragm
5	Valve body		

- Clamp the valve body in a holding device (only for devices which have not yet been installed).
- **NOTICE! For valves with control function A:** Pressurise pilot air port 1 with compressed air (value as indicated on the type label). This is required to detach the diaphragm without damage from the body.
  This step is not necessary for valves with control functions B and I.
- Loosen the body screws crosswise and remove the actuator and diaphragm from the valve body.

MAN 1000751247 EN Version: A Status: RL (released | freigegeben) printed: 17.08.2026

valvesgo.com

5.5 Installing the actuator on the valve body

5.5.1 Control function A: Installing the actuator on the valve body

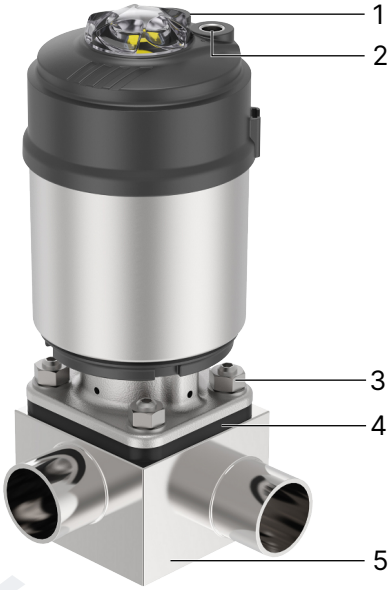

1	Pilot air port 1 for CF A, CF B and CF I	2	Pilot air port 2 for CF I, exhaust port for CF A and CF B
3	Body screw	4	Diaphragm
5	Valve body		

- Ensure the correct position of the compressor (see Compressor [▸ 41]).
  Note: Not necessary for diaphragm size 8.
- Pressurise the pilot air port 1 with compressed air (value as indicated on the type label): valve opens.
- Place the actuator together with the diaphragm on the valve body.
- Slightly tighten the body screws crosswise until the diaphragm rests between the valve body and the actuator. **Do not fully tighten the screws yet.**
- Actuate the valve twice to position the diaphragm correctly.
- Switch off the pilot pressure.
- Without applying pressure, tighten the body screws in three stages (approx. 1/3, then 2/3 and then full tightening torque, as specified in the following table), in each case crosswise. The diaphragm should be positioned and pressed evenly all around the actuator and valve body.

Diaphragm size	Tightening torques [Nm] (tolerance: +10 %)	
	EPDM, FKM	PTFE, advanced PTFE, GYLON®
8	2	2.5
15	3.5	4
20	4	4.5
25	5	6

MAN 1000751247 EN Version: A Status: RL (released | freigegeben) printed: 17.08.2026

valvesgo.com

Diaphragm size	Tightening torques [Nm] (tolerance: +10 %)	
	EPDM, FKM	PTFE, advanced PTFE, GYLON®
40	8	10
50	12	15
65	20	30
80	30	40
100	40	50

Tab. 12: Tightening torques for body connection

MAN 1000751247 EN Version: A Status: RL (released | freigegeben) printed: 17.08.2026

valvesgo.com

5.5.2 Control functions B and I: Installing the actuator on the valve body

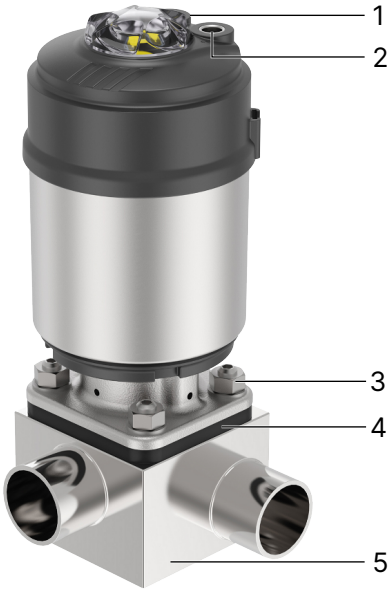

1	Pilot air port 1 for CF A, CF B and CF I	2	Pilot air port 2 for CF I, exhaust port for CF A and CF B
3	Body screw	4	Diaphragm
5	Valve body		

- Ensure the correct position of the compressor (see Compressor [▸ 41]).
  Note: Not necessary for diaphragm size 8.
- Place the actuator together with the diaphragm on the valve body.
- Slightly tighten the body screws crosswise without applying pressure until the diaphragm rests between the valve body and actuator. **Do not fully tighten the screws yet.**
- Actuate the valve twice to position the diaphragm correctly.
- Pressurise with compressed air to pilot air port 1 for control function B, and to pilot air port 2 for control function I (value as specified on the type label): valve closes.
- With pressure, tighten the body screws in three stages (approx. 1/3, then 2/3 and then full tightening torque, as specified in the following table), in each case crosswise. The diaphragm should be positioned and pressed evenly all around the actuator and valve body.

Diaphragm size	Tightening torques [Nm] (tolerance: +10 %)	
	EPDM, FKM	PTFE, advanced PTFE, GYLON®
8	2	2.5
15	3.5	4
20	4	4.5
25	5	6
40	8	10
50	12	15

MAN 1000751247 EN Version: A Status: RL (released | freigegeben) printed: 17.08.2026

valvesgo.com

Diaphragm size	Tightening torques [Nm] (tolerance: +10 %)	
	EPDM, FKM	PTFE, advanced PTFE, GYLON®
65	20	30
80	30	40
100	40	50

Tab. 13: Tightening torques for body connection

MAN 1000751247 EN Version: A Status: RL (released | freigegeben) printed: 17.08.2026

valvesgo.com

valvesgo.com

5.6 Aligning the actuator

On valves with a stainless steel diaphragm bonnet, the actuator can be rotated continuously through 360° relative to the valve body.

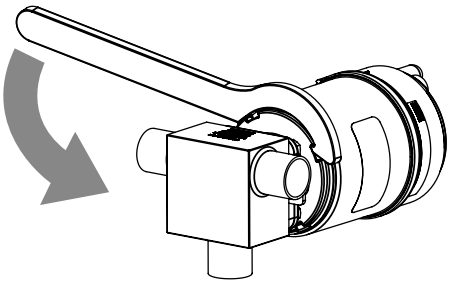

Fig. 32: Aligning the actuator

- Turn the actuator using a hook wrench. Turn the actuator only as far as necessary (max. 360°).

Actuator size [ø mm]	Recommended hook wrenches (A) as per DIN 1810
50 (D)	A 52...55
70 (M)...130 (P)	A 68...75

For actuator size 225 (L):

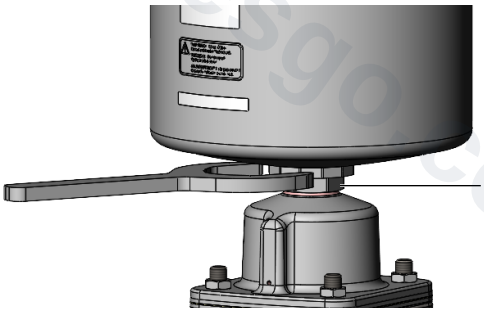

Fig. 33: Aligning the actuator for actuator size 225

1	Actuator base hexagon socket

- Place an SW41 open-end wrench on the hexagon socket of the actuator base.
- Set the actuator to the required position.

MAN 1000751247 EN Version: A Status: RL (released | freigegeben) printed: 17.08.2026

valvesgo.com

5.7 Compressor

WARNING!

Risk of crushing

If the compressor is not positioned correctly and the actuator is actuated, this may result in injuries and damage to the device.

- Before actuating the actuator, ensure that the compressor is in the correct position.

Fig. 34: Correct and incorrect position of the compressor

MAN 1000751247 EN Version: A Status: RL (released | freigegeben) printed: 17.08.2026

valvesgo.com

6 Additional information for devices with 3-A approval (code PE05)

Risk of injury or material damage when working on the device or system.

- Read and observe the chapter Safety [▸ 7] before working on the device or system.

Labelling for 3-A certified devices

Devices that have a 3-A approval are provided with additional adhesive labels. These labels are located on the actuator and are used to clearly identify the hygienic approval and the operating materials used.

Fig. 35: 3-A approval adhesive label

Lubricant information label (NSF-H1)

Information regarding the prescribed lubricant is also present on the device. Only sterile greases with NSF-H1 approval may be used. Compliance with this requirement is essential to ensure the 3-A conformity of the device and operational safety.

Only use sterile grease approved by NSF cat. H1

Fig. 36: Information regarding prescribed lubricant

6.1 Safety instructions for installation and maintenance

Devices with pneumatic actuators must be cleaned in accordance with the clean-in-place cycle. In compliance with the 3-A standard, devices with manual actuators must be disassembled before they are cleaned.

Remove the compressor after removing the actuator. Clean the area with a soft brush.

6.1.1 Removing the compressor for diaphragm sizes 15–25

- Unscrew the spindle base using a suitable slotted screwdriver.
- Remove and clean the compressor.
- Lubricate the spindle with suitable grease.

MAN 1000751247 EN Version: A Status: RL (released | freigegeben) printed: 17.08.2026

valvesgo.com

- Insert the spindle base into the compressor. Position both parts.
- Screw the spindle base into the spindle. If necessary, secure with screw lock (e.g. Loctite 221/222). Observe a tightening torque of 4 Nm +10%.

6.1.2 Removing the compressor for diaphragm sizes 32...80

- Move the compressor to the lower position. To do this, pressurise with compressed air to pilot air port 1 for control function B, and to pilot air port 2 for control function I.
  For control function A, release the pilot pressure.

- Twist the compressor to remove it. The compressor guide is modified for this purpose.
- Clean the compressor and lubricate the spindle with suitable grease.

- Insert the compressor. Ensure it is positioned correctly.
- For control function B, release the pilot pressure.

MAN 1000751247 EN Version: A Status: RL (released | freigegeben) printed: 17.08.2026

valvesgo.com

valvesgo.com

7 Pneumatic connection

Risk of injury or material damage when working on the device or system.

- Read and observe the chapter Safety [▸ 7] before working on the device or system.

Service and support

- For further information, technical advice and support, contact Bürkert service .

7.1 Connecting the device pneumatically

WARNING!

Risk of injury from connection of unsuitable hoses

Inappropriate hoses can come loose and swing around.

- Use only hoses which are authorised for the indicated pressure and medium temperature range.
- Observe the data sheet specifications from the hose manufacturers.

WARNING!

For control function I: Risk of injury in the event of pilot pressure failure

The valve stays in an undefined position in the event of a pilot pressure failure.

- Switch off the pressure before working on the device or system. Vent or drain the lines.
- To ensure a controlled restart, first pressurise the device with pilot pressure, then switch on the medium.

Control functions A and B:

- Connect the control medium to the pilot air port 1 of the actuator.

Control function A, 3-position actuator:

- Connect the control medium to the pilot air port 1 and pilot air port 2 of the actuator.
  Pressure at pilot air port 1: Valve opens.
  Pressure at pilot air port 1 and 2: Valve in centre position.

Control function I:

- Connect the control medium to the pilot air port 1 and pilot air port 2 of the actuator.
  Pressure at pilot air port 1: Valve opens.
  Pressure at pilot air port 2: Valve closes.

Silencer

For devices with push-in connection, the silencer to reduce the exhaust air volume is loosely supplied.

- Connect the silencer to the free exhaust port 2.

In aggressive environments, drain open pneumatic connections into a neutral atmosphere using a pneumatic hose.

MAN 1000751247 EN Version: A Status: RL (released | freigegeben) printed: 17.08.2026

valvesgo.com

Pilot air port

The following pilot air ports can be used:

Actuator size	Standard	Optional
50 (D)...130 (P)	Push-in connector for outer diameter 6 mm or 1/4"	G 1/8
225 (L)	G 1/8	–

MAN 1000751247 EN Version: A Status: RL (released | freigegeben) printed: 17.08.2026

valvesgo.com

valvesgo.com

8 Commissioning

Risk of injury or material damage when working on the device or system.

- Read and observe the chapter Safety [▸ 7] before working on the device or system.

Service and support

- For further information, technical advice and support, contact Bürkert service .

8.1 Commission the device

WARNING!

For control function I: Risk of injury in the event of pilot pressure failure

The valve stays in an undefined position in the event of a pilot pressure failure.

- Switch off the pressure before working on the device or system. Vent or drain the lines.
- To ensure a controlled restart, first pressurise the device with pilot pressure, then switch on the medium.

WARNING!

Risk of injury from high pressure or hot medium

Excessively high pressure or temperatures may damage the device and cause leaks.

- Observe values for pressure and medium temperature indicated on the type label.

In the case of devices with control unit, observe start-up in the operating instructions for the corresponding control unit.

- Adjust the pilot pressure in accordance with the information on the type label and in technical data.
- Commission the device.

8.2 Setting the middle position on 3-position actuator

	Open position [100% stroke]	Middle position [0–100% stroke]
Pilot air port 1	5–7 bar	5–7 bar
Pilot air port 2	0 bar	5–7 bar

MAN 1000751247 EN Version: A Status: RL (released | freigegeben) printed: 17.08.2026

valvesgo.com

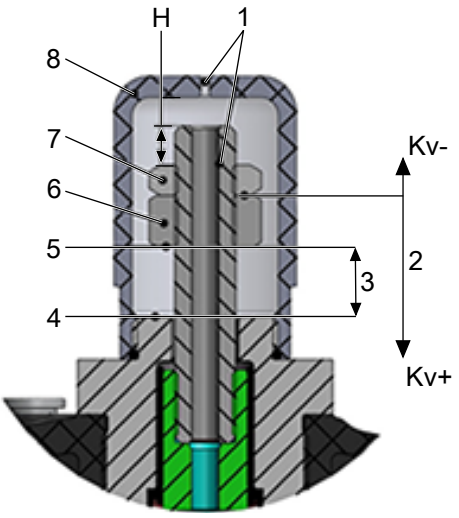

Fig. 37: Setting the middle position

1	Ventilation	2	Position of the nut
3	Stroke	4	100% stroke
5	0% stroke	6	Nut
7	Locknut	8	Transparent cap

- Unscrew the transparent cap: Actuator sizes 50, 70 and 90, width across flats 28.
- Pressurise pilot air port 1 with compressed air at 5 bar.
- Loosen the locknut.
  Actuator size 50: width across flats 13
  Actuator size 70 and 90: width across flats 17
- Adjust the middle position with the nut.
- Tighten the locknut.
  Actuator size 50 max. 20+5 Nm
  Actuator size 70 max. 30+5 Nm
  Actuator size 90 max. 45+5 Nm
- Unscrew the transparent cap.

To limit the middle position to 50% of the total stroke, adjust the nuts to dimension H.

Actuator size [mm]	Diaphragm size	Dimension H ±0.3 [mm]		Total stroke [mm]	
		EPDM/FKM	PTFE	EPDM/FKM	PTFE
50	8	14.6	14.6	2.4	2.4
	15	12.3	-	7.0	-
70	15	14.4	15.4	7.0	5.0
	20	13.4	13.9	9.0	8.0
	25	13.4	–	9.0	–
90	25	16.3	16.8	9.0	8.0

Tab. 14: Setting the middle position to 50% of the total stroke

MAN 1000751247 EN Version: A Status: RL (released | freigegeben) printed: 17.08.2026

valvesgo.com

9 Maintenance

Risk of injury or material damage when working on the device or system.

- Read and observe the chapter Safety [▸ 7] before working on the device or system.

Service and support

- For further information, technical advice and support, contact Bürkert service .

9.1 Actuator

The device actuator is maintenance-free if the instructions in these operating instructions are followed.

9.2 Wearing parts

Components which are subject to natural wear are:

- Seals
- Diaphragm
- If leaks occur, replace the affected wearing parts with suitable spare parts.
- The relief bore must be inspected at regular intervals for any medium leakages.

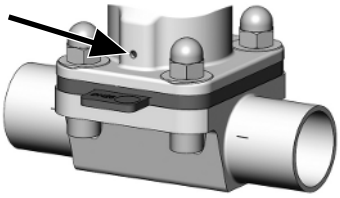

A bulging diaphragm may reduce the flow rate.

9.3 Inspection intervals

The following inspection intervals apply to the diaphragm valve:

- **After the first steam sterilisation and when required:**
  Tighten the body screws crosswise.
- **After 10^5 switching cycles at the latest:**
  Check the diaphragm for wear.

Shortened inspection intervals are required for muddy and abrasive media.

MAN 1000751247 EN Version: A Status: RL (released | freigegeben) printed: 17.08.2026

valvesgo.com

9.4 Service life of the diaphragm

The service life of the diaphragm depends on the following factors:

- Diaphragm material
- Medium
- Medium pressure
- Medium temperature
- Actuator size
- Pilot pressure for CF B and CF I

To increase the diaphragm service life, observe the following instructions:

- **For CF A:** Match the actuator size (actuator force) to the medium pressure to be actuated. If required, use the actuator with reduced spring force EC04.
- **For CF B and CF I:** Select a pilot pressure that is not higher than is required to actuate the medium pressure.

9.5 Cleaning

NOTICE!

Avoid causing damage with cleaning agents.

- Before cleaning, check that the cleaning agents are compatible with device materials and seals.

- Only use commercially available cleaning agents for external cleaning.

MAN 1000751247 EN Version: A Status: RL (released | freigegeben) printed: 17.08.2026

valvesgo.com

valvesgo.com

10 Repair

Risk of injury or material damage when working on the device or system.

- Read and observe the chapter Safety [▸ 7] before working on the device or system.

Service and support

- For further information, technical advice and support, contact Bürkert service .

10.1 Replacing the diaphragm

DANGER!

Risk of injury from sudden discharge of pressure and escaping medium

Disassembling a pressurised device can cause medium to escape unexpectedly or a sudden discharge of pressure. This can cause serious injuries.

- Before disassembly, shut off the pressure and vent all lines.
- Completely drain the lines.
- During reinstallation, check the tightening torque of the body screws.

Diaphragm size	Diaphragm material	
	PTFE and advanced PTFE	EPDM, FKM and GYLON®
≤8	Diaphragm fastening using buttons	
15, 20	Diaphragm fastening using bayonet catch	
≥25	Diaphragm fastening using bayonet catch	Diaphragm fastening using threaded connection

Tab. 15: Types of diaphragm fastening

MAN 1000751247 EN Version: A Status: RL (released | freigegeben) printed: 17.08.2026

valvesgo.com

10.1.1 Control function A: Replacing the diaphragm

1	Pilot air port 1 for CF A, CF B and CF I	2	Pilot air port 2 for CF I, exhaust port for CF A and CF B
3	Body screw	4	Diaphragm
5	Valve body		

- Clamp the valve body in a holding device (only for devices which have not yet been installed).
- Pressurise the pilot air port 1 with compressed air (value as indicated on the type label): valve opens.
- Loosen the body screws crosswise and remove the actuator and diaphragm from the valve body.
- Unbutton or unscrew the old diaphragm. When fastening with a bayonet catch, loosen the diaphragm by rotating it 90°. For diaphragm size ≥25, observe additional chapter Switching between PTFE diaphragm and EPDM diaphragm [▸ 55].
- Ensure the correct position of the compressor (see Compressor [▸ 41]).
  Note: Not necessary for diaphragm size 8.

NOTICE!

Damage to diaphragms with threaded connection

If the pin is live, the diaphragm may be damaged.

- First screw on the diaphragm hand-tight, then loosen it by one-half turn anticlockwise.

- Attach the new diaphragm to the compressor according to the fastening type. When fastening the diaphragm by buttoning it in, a slight twisting motion is helpful. The identification tab must be perpendicular to the flow direction.
- Place the actuator together with the diaphragm on the valve body.
- Slightly tighten the body screws crosswise until the diaphragm rests between the valve body and the actuator. **Do not fully tighten the screws yet.**
- Actuate the valve twice to position the diaphragm correctly.
- Switch off the pilot pressure.

MAN 1000751247 EN Version: A Status: RL (released | freigegeben) printed: 17.08.2026

valvesgo.com

- Without applying pressure, tighten the body screws in three stages (approx. 1/3, then 2/3 and then full tightening torque, as specified in the following table), in each case crosswise. The diaphragm should be positioned and pressed evenly all around the actuator and valve body.

Diaphragm size	Tightening torques [Nm] (tolerance: +10 %)	
	EPDM, FKM	PTFE, advanced PTFE, GYLON®
8	2	2.5
15	3.5	4
20	4	4.5
25	5	6
40	8	10
50	12	15
65	20	30
80	30	40
100	40	50

Tab. 16: Tightening torques for body connection

valvesgo.com

MAN 1000751247 EN Version: A Status: RL (released | freigegeben) printed: 17.08.2026

10.1.2 Control functions B and I: Replacing the diaphragm

1	Pilot air port 1 for CF A, CF B and CF I	2	Pilot air port 2 for CF I, exhaust port for CF A and CF B
3	Body screw	4	Diaphragm
5	Valve body		

- Clamp the valve body in a holding device (only for devices which have not yet been installed).
- Loosen the body screws crosswise and remove the actuator and diaphragm from the valve body.
- Unbutton or unscrew the old diaphragm. When fastening with a bayonet catch, loosen the diaphragm by rotating it 90°. For diaphragm size ≥25, observe additional chapter Switching between PTFE diaphragm and EPDM diaphragm [▸ 55].
- Ensure the correct position of the compressor (see Compressor [▸ 41]).
  Note: Not necessary for diaphragm size 8.

NOTICE!

Damage to diaphragms with threaded connection

If the pin is live, the diaphragm may be damaged.

- First screw on the diaphragm hand-tight, then loosen it by one-half turn anticlockwise.

- Attach the new diaphragm to the compressor according to the fastening type. When fastening the diaphragm by buttoning it in, a slight twisting motion is helpful. The identification tab must be perpendicular to the flow direction.
- Place the actuator together with the diaphragm on the valve body.
- Slightly tighten the body screws crosswise without applying pressure until the diaphragm rests between the valve body and actuator. **Do not fully tighten the screws yet.**
- Actuate the valve twice to position the diaphragm correctly.
- Pressurise with compressed air to pilot air port 1 for control function B, and to pilot air port 2 for control function I (value as specified on the type label): valve closes.

MAN 1000751247 EN Version: A Status: RL (released | freigegeben) printed: 17.08.2026

valvesgo.com

- With pressure, tighten the body screws in three stages (approx. 1/3, then 2/3 and then full tightening torque, as specified in the following table), in each case crosswise. The diaphragm should be positioned and pressed evenly all around the actuator and valve body.

Diaphragm size	Tightening torques [Nm] (tolerance: +10 %)	
	EPDM, FKM	PTFE, advanced PTFE, GYLON®
8	2	2.5
15	3.5	4
20	4	4.5
25	5	6
40	8	10
50	12	15
65	20	30
80	30	40
100	40	50

Tab. 17: Tightening torques for body connection

valvesgo.com

MAN 1000751247 EN Version: A Status: RL (released | freigegeben) printed: 17.08.2026

valvesgo.com

10.1.3 Switching between PTFE diaphragm and EPDM diaphragm

Diaphragm size	Diaphragm material	
	PTFE and advanced PTFE	EPDM, FKM and GYLON®
≤8	Diaphragm fastening using buttons	
15, 20	Diaphragm fastening using bayonet catch	
≥25	Diaphragm fastening using bayonet catch	Diaphragm fastening using threaded connection

Tab. 18: Types of diaphragm fastening

10.1.3.1 Replacement for diaphragm size ≤8

- Unbutton the diaphragm and button on the new diaphragm by turning it slightly.

10.1.3.2 Replacement for diaphragm sizes 15 and 20

- Loosen the bayonet diaphragm by turning it 90°, insert the new diaphragm and turn it 90° to secure it.

10.1.3.3 Replacement for diaphragm sizes ≥25

Switching from PTFE diaphragm to EPDM diaphragm

1	Insert	2	Compressor
3	Compressor with installed insert		

- Loosen the PTFE diaphragm by turning it 90°.
- Place the insert into the compressor.
- Screw in the EPDM diaphragm.

NOTICE!

Damage to diaphragms with threaded connection

If the pin is live, the diaphragm may be damaged.

- First screw on the diaphragm hand-tight, then loosen it by one-half turn anticlockwise.

MAN 1000751247 EN Version: A Status: RL (released | freigegeben) printed: 17.08.2026

valvesgo.com

Switching from EPDM diaphragm to PTFE diaphragm

NOTICE!

Damage to diaphragm with bayonet connection

If the insert is not removed from the compressor on diaphragms with a bayonet connection, the diaphragm and valve body may be severely damaged.

- Unscrew the EPDM diaphragm.
- Remove the insert from the compressor.
- Insert the PTFE diaphragm and turn it 90° to secure it.

MAN 1000751247 EN Version: A Status: RL (released | freigegeben) printed: 17.08.2026

valvesgo.com

valvesgo.com

11 Troubleshooting

Risk of injury or material damage when working on the device or system.

- Read and observe the chapter Safety [▸ 7] before working on the device or system.

Service and support

- For further information, technical advice and support, contact Bürkert service .

11.1 Actuator does not switch

Cause	Solution
Pilot air port interchanged.	▸ Connect the pilot air correctly: CFA (2/2-way valve): Pilot air port 1.
	▸ Connect the pilot air correctly: CFB: Pilot air port 1.
	▸ Connect the pilot air correctly: CFI: Pilot air port 1: Open, Pilot air port 2: Close.
	▸ Connect the pilot air correctly: CFA (2/3-way valve): Pilot air port 1: Open, Pilot air port 2: Centre position.
Pilot pressure too low.	▸ Observe pressure data on the type label.
Operating pressure too high.	▸ Observe pressure data on the type label.

11.2 Valve is not tight

Cause	Solution
Pilot pressure too low.	▸ Observe pressure data on the type label.
Operating pressure too high.	▸ Observe pressure data on the type label.

11.3 Flow rate reduced

Cause	Solution
Bulging PTFE diaphragm.	▸ Replace the diaphragm.

MAN 1000751247 EN Version: A Status: RL (released | freigegeben) printed: 17.08.2026

valvesgo.com

12 Disassembly

Risk of injury or material damage when working on the device or system.

- Read and observe the chapter Safety [▸ 7] before working on the device or system.

DANGER!

Risk of injury from sudden discharge of pressure and escaping medium

Disassembling a pressurised device can cause medium to escape unexpectedly or a sudden discharge of pressure. This can cause serious injuries.

- Before disassembly, shut off the pressure and vent all lines.
- Completely drain the lines.
- During reinstallation, check the tightening torque of the body screws.

- Loosen the pneumatic connection.
- Disassemble the device.

valvesgo.com

MAN 1000751247 EN Version: A Status: RL (released | freigegeben) printed: 17.08.2026

valvesgo.com

13 Spare parts

Risk of injury and/or damage due to incorrect parts.

- Only use original Bürkert parts.

13.1 Diaphragm

Depending on the valve type, not all of the listed diaphragm sizes are available. The sizes specified for the respective diaphragm valve are decisive.

The diaphragms are labelled with a material code that specifies it. The material code is located on the identification tab or, in the case of two-part diaphragms, on the tab of the backing diaphragm and the diaphragm shield. The material code may differ for older materials.

Diaphragm size	EPDM (AD[9])		FKM (FF[9])	
	Order number	Material code	Order number	Material code
6	20130838	EPDM E04	–	–
8	688421	EPDM E04	677684	FKM F01
15	688422	EPDM E04	677685	FKM F01
15 BC[10]	693163	EPDM E04	693164	FKM F01
20	688423	EPDM E04	677686	FKM F01
20 BC[10]	693166	EPDM E04	693167	FKM F01
25	688424	EPDM E04	677687	FKM F01
32	688425	EPDM E04	677688	FKM F01
40	688426	EPDM E04	677689	FKM F01
50	688427	EPDM E04	677690	FKM F01
65	688428	EPDM E04	677691	FKM F01
80	688429	EPDM E04	677692	FKM F01
100	688430	EPDM E04	677693	FKM F01

Tab. 19: Order numbers for EPDM and FKM diaphragms

9) SAP code

10) Marking on the diaphragm

MAN 1000751247 EN Version: A Status: RL (released | freigegeben) printed: 17.08.2026

valvesgo.com

Diaphragm size	PTFE/EPDM (EA[9)])		Advanced PTFE/EPDM (EU[9)])	
	Order number	Material code	Order number	Material code
6	–	–	–	–
8	20093068	PTFE L11	20093078	PTFE L12
15	20093069	EPDM E04/ PTFE P05	20093079	EPDM E04/ PTFE P06
20	20093070	EPDM E04/ PTFE P05	20093080	EPDM E04/ PTFE P06
25	20093071	EPDM E04/ PTFE P05	20093082	EPDM E04/ PTFE P06
32	20093072	EPDM E04/ PTFE P05	20093083	EPDM E04/ PTFE P06
40	20093073	EPDM E04/ PTFE P05	20093084	EPDM E04/ PTFE P06
50	20093074	EPDM E04/ PTFE P05	20093087	EPDM E04/ PTFE P06
65	20093075	EPDM E04/ PTFE P05	20093088	EPDM E04/ PTFE P06
80	20093076	EPDM E04/ PTFE P05	20093091	EPDM E04/ PTFE P06
100	20093077	EPDM E04/ PTFE P05	20093092	EPDM E04/ PTFE P06

Tab. 20: Order numbers for PTFE and advanced PTFE diaphragms

Diaphragm size	Laminate made from Gylon® and EPDM (ER[9)])	
	Order number	Material code
6	20130839	PTFE L08
8	693175	PTFE L08
15	693176	PTFE L08
20	693177	PTFE L08
25	693178	PTFE L08
32	693179	PTFE L08
40	693180	PTFE L08
50	693181	PTFE L08
65	586616	PTFE L08
80	586617	PTFE L08
100	-	–

Tab. 21: Article numbers for GYLON® diaphragms

MAN 1000751247 EN Version: A Status: RL (released | freigegeben) printed: 17.08.2026

valvesgo.com

13.2 Additional Information

An overview of the available accessories for pneumatic actuators is included in the data sheet Type 2XXX. Information on variants, possible applications and order data is listed there.

MAN 1000751247 EN Version: A Status: RL (released | freigegeben) printed: 17.08.2026

valvesgo.com

14 Logistics

14.1 Transport and storage

- Protect the device against moisture and dirt in the original packaging during transportation and storage.
- Avoid UV radiation and direct sunlight.
- Protect connections, if present, from damage with protective caps.
- Observe the permitted storage temperature.
- If the device is to be stored for a long time, loosen the body screws to avoid permanent deformation of the diaphragms due to a lack of medium pressure.
- Mark loosened screws clearly for safety reasons.

Observe the instructions in chapter Storage of elastomer parts [▸ 63].

DANGER!

Risk of injury due to escaping medium

Loosened body screws can cause medium (acid, alkali, hot media) to leak and lead to burns, including chemical burns.

- Before reinstallation, check the tightening torque of the body screws.

14.2 Return

No work or tests will be carried out on the device until a valid Contamination Declaration has been received.

- Before returning a used device, log in to a Bürkert account and create a return request via My Services.
  Register an account before creating the request, if necessary. A return number is required for all used devices.
- Complete the Contamination Declaration and include it with the return shipment.
- Reinstall all original protective caps and plugs before shipping. This helps protect the device against contamination and transport damage.
- Pack the device securely and clearly indicate the return number on the shipment.

14.3 Disposal

Environmentally friendly disposal

- Follow national regulations regarding disposal and the environment.
- Collect electrical and electronic devices separately and dispose of them as special waste.

Further information at country.burkert.com

MAN 1000751247 EN Version: A Status: RL (released | freigegeben) printed: 17.08.2026

valvesgo.com

15 Appendix

15.1 Storage of elastomer parts

Elastomer parts could lose their eponymous features as storage time progresses. These changes happen based on various influencing factors such as light, heat, ozone, humidity, deformation, oxygen, oils and solvents. International standards such as DIN 7716 or ISO 2230 Basic illustrate basic instructions for correct storage.

The below mentioned information regarding storage time, under optimum conditions, are based on the above mentioned guidelines and on our experience. In principle, they should be considered when maintaining their physical and chemical properties. Correct storage is an important factor in the operating life of elastomers especially for highly stressed components (e.g. diaphragms).

- Optimal storage temperature is between + 5°C and + 25°C. The parts shouldn't be stored next to a heating element.
- Relative air humidity should be less than 65% with condensation avoided at all times.
- Parts should be stored away from all direct sunlight and artificial light with a high UV, as this will speed up the ageing process.
- All parts should be also stored in an airtight container to protect them from circulating air and other environmental influences such as Ozone for example.
- Ozone generating devices, such as electric motors, should also not be operated within storage areas.
- Elastomer parts are best stored in a relaxed and non deforming condition.
- Contact to solvents, oils, fats and other chemicals should be avoided at all times.
- No contact with rubber products of varying composition especially of varying colors.
- No contact with parts made of cooper, manganese or alloys of these metals.

Based on the above, the following is the expected life cycle for diaphragms.

Raw Material	Storage Period (max.)	Operating Time (max.)
EPDM	7 years	3 years
FKM	7 years	4 years
PTFE or advanced PTFE	10 years	3 years[11)]

[11)] Regarding PTFE diaphragm variants, the stated times of the elastomer material are crucial.

MAN 1000751247 EN Version: A Status: RL (released | freigegeben) printed: 17.08.2026

valvesgo.com