bürkert
FLUID CONTROL SYSTEMS

Type 2871

Direct-acting 2-way proportional valve

valvesgo.com

MAN 1000609322 EN Version: B Status: RL (released | freigegeben) printed: 10.10.2026

Operating instructions

valvesgo.com

MAN 1000609322 EN Version: B Status: RL (released | freigegeben) printed: 10.10.2026

valvesgo.com

We reserve the right to make technical changes without notice.
Technische Änderungen vorbehalten.
Sous réserve de modifications techniques.

© Bürkert Werke GmbH & Co. KG, 2024

Operating Instructions 2402/00_DEde_00815468 / Original DE

Table of contents

1 OPERATING INSTRUCTIONS 5

1.1 Symbols 5

1.2 Definition of the term “device” 5

2 INTENDED USE 6

3 BASIC SAFETY INSTRUCTIONS 7

4 GENERAL NOTES 8

4.1 Contact addresses 8

4.2 Warranty 8

4.3 Information online 8

5 PRODUCT DESCRIPTION 9

5.1 Product structure 9

5.2 Type label (example) 10

5.3 Circuit function 10

6 TECHNICAL DATA 11

6.1 Standards and directives 11

6.2 Operating conditions 11

6.3 Mechanical and pneumatic data 11

6.4 Electrical data 11

7 INSTALLATION 12

7.1 Installation position 12

7.2 Prior to installation 12

7.3 Screw in valve in pipe (threaded connection) 13

7.4 Install valve on base block (flange connection) 13

8 ELECTRICAL INSTALLATION 14

8.1 Connecting the cable plug 14

MAN 1000609322 EN Version: B Status: RL (released | freigegeben) printed: 10.10.2026

valvesgo.com

9 CONTROL ELECTRONICS 15

9.1 PWM frequency 15

10 MAINTENANCE AND TROUBLESHOOTING 16

10.1 Maintenance 16

10.2 Troubleshooting 16

11 TRANSPORTATION, STORAGE, DISPOSAL 17

MAN 1000609322 EN Version: B Status: RL (released | freigegeben) printed: 10.10.2026

valvesgo.com

1 OPERATING INSTRUCTIONS

The operating instructions describe the entire life cycle of the device. Keep these instructions ready to hand at the operation site.

Important safety information!

- Carefully read these instructions.
- Above all, observe the safety instructions, intended use and usage conditions.
- Persons who work on the device must read and understand these instructions.

1.1 Symbols

DANGER!

Warns of an immediate danger.

- Failure to observe will result in death or serious injuries.

WARNING!

Warns of a potential danger.

- Failure to observe may result in death or serious injuries.

CAUTION!

Warns of a potential danger.

- Failure to observe may result in moderate or minor injuries.

Indicates important additional information, advice and recommendations.

Refers to information in these operating instructions or in other documentation.

▶ Designates instructions to avoid danger.

→ Designates a procedure which you must carry out.

1.2 Definition of the term “device”

In these instructions, the term “device” refers to the proportional valve type 2871.

MAN 1000609322 EN Version: B Status: RL (released | freigegeben) printed: 10.10.2026

valvesgo.com

2 INTENDED USE

The direct-acting proportional valve can be used as an actuator for process control.

- Do not use the device in explosive atmospheres.
- Do not use the device outdoors.
- Do not make any internal or external changes to the device.
- The prerequisites for safe and trouble-free operation are correct transportation, correct storage, installation, commissioning, operation and maintenance.
- To use the device, observe the permitted data, operating conditions and usage conditions. These specifications can be found in the contract documents, the operating instructions and on the type label.
- Use the device only in conjunction with third-party devices and components recommended or approved by Bürkert.
- Use the device only as intended. Non-intended use of the device may be dangerous to people, nearby equipment and the environment.

valvesgo.com

MAN 1000609322 EN Version: B Status: RL (released | freigegeben) printed: 10.10.2026

3 BASIC SAFETY INSTRUCTIONS

These safety instructions do not take into account any unforeseen circumstances and events which occur during installation, operation and maintenance. The operator is responsible for observing the location-specific safety regulations, also with reference to personnel.

Risk of injury due to high pressure and escaping medium.

- Switch off the pressure before working on the device or system. Vent or drain the pipes.

Risk of burns or fire from hot device surfaces due to longer duty cycles.

- Wear suitable protective gloves when working on the device.
- Keep highly flammable substances and media away from the device.
- Do not obstruct heat dissipation required for operation.

Functional failure with unauthorised temperature range

- Comply with authorised temperature ranges (see “6.2 Operating conditions” on page 11)

General hazardous situations.

To prevent injuries, observe the following:

- Use the device only when it is in perfect condition and in accordance with the operating instructions.
- Do not to subject the device to mechanical stress.
- Secure the device or system to prevent unintentional activation.
- Only trained technicians may perform installation and maintenance work.
- Install the device according to the regulations applicable in the respective country.
- Following interruption of the process, ensure that the process is restarted in a controlled manner.
- Observe the general rules of the technical equipment.

NOTE!

Electrostatically sensitive components and assemblies.

The device contains electronic components that are susceptible to the effects of electrostatic discharging (ESD). Components are at risk if they come into contact with electrostatically loaded persons or objects. In the worst case scenario, these components will be destroyed immediately or fail after start-up.

- Meet the requirements specified by EN 61340-5-1 to minimise or avoid the possibility of damage caused by sudden electrostatic discharge.
- Do not touch electronic components when the supply voltage is connected.

MAN 1000609322 EN Version: B Status: RL (released | freigegeben) printed: 10.10.2026

valvesgo.com

4 GENERAL NOTES

4.1 Contact addresses

Germany

Bürkert Fluid Control Systems
Sales Centre
Christian-Bürkert-Str. 13-17
D-74653 Ingelfingen
Tel. +49 (0) 7940-10-91 111
Fax +49 (0) 7940-10-91 448
Email: info@burkert.com

You can find the international contact addresses at country.burkert.com in the “Contact” menu.

4.2 Warranty

A precondition for the warranty is that the device is used as intended and that the specified usage conditions are taken into account.

4.3 Information online

Operating instructions and data sheets for Bürkert products can be found online at country.burkert.com

valvesgo.com

MAN 1000609322 EN Version: B Status: RL (released | freigegeben) printed: 10.10.2026

5 PRODUCT DESCRIPTION

The type 2871 direct-acting proportional valve is used as an actuator for process control loops.

An elastomeric seat seal makes the valve close tight up to the orifice-specific nominal pressure (integrated shut-off function). The magnetic core of the valve is stored without friction, which results in outstanding positioning behaviour. The valve is particularly suitable for demanding control tasks (large setting range, dry gases, etc.).

5.1 Product structure

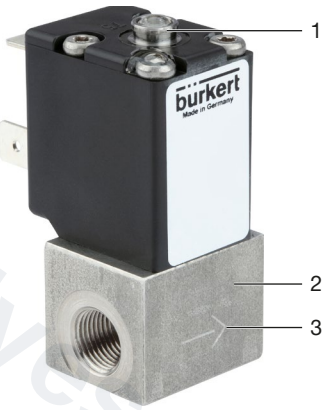

Fig. 1: Example of a type 2871 proportional valve

Item		Item	
1	Adjusting screw (do not adjust!)	2	Valve body
3	Labelling flow direction		

valvesgo.com

MAN 1000609322 EN Version: B Status: RL (released | freigegeben) printed: 10.10.2026

5.2 Type label (example)

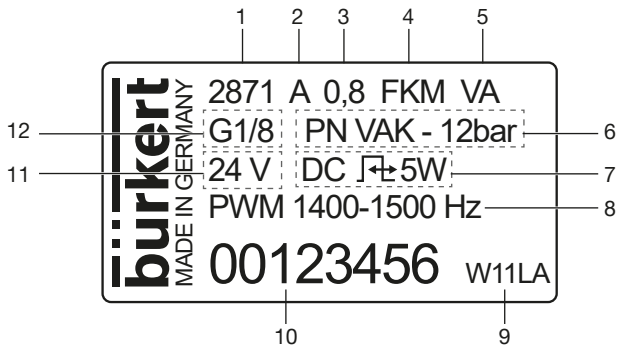

Item		Item	
1	Type	2	Circuit function
3	Seat size	4	Seal material
5	Body material	6	Permitted pressure range
7	Current type, power consumption	8	PWM frequency
9	Manufacture code	10	Article number
11	Operating voltage	12	Port connection

5.3 Circuit function

Circuit function (CF)	Switch symbol	Description
A	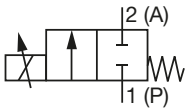	2/2-way solenoid valve, direct-acting, normally closed.

MAN 1000609322 EN Version: B Status: RL (released | freigegeben) printed: 10.10.2026

valvesgo.com

6 TECHNICAL DATA

6.1 Standards and directives

The device complies with the valid EU harmonisation legislation. In addition, the device also complies with the requirements of the laws of the United Kingdom.

The harmonised standards that have been applied for the conformity assessment procedure are listed in the current version of the EU Declaration of Conformity/ UK Declaration of Conformity.

6.2 Operating conditions

Ambient temperature	–10…+55 °C (for FKM) –30…+55 °C (for EPDM)
Storage temperature	–20...+70 °C
Medium temperature	–10…+90 °C (for FKM) –30…+90 °C (for EPDM)
Degree of protection	IP65 in accordance with DIN EN 60529
Permitted media	neutral gases, liquids on request

6.3 Mechanical and pneumatic data

For materials, authorised pressure range and port connection, see type label.

6.4 Electrical data

For operating voltage and power consumption, see type label.

Nominal operating mode	Continuous operation duty cycle 100% in accordance with DIN EN 60034-1
Electrical connection	Strands or plug (cable plug type 2507, plug shape B in accordance with industry standard)

MAN 1000609322 EN Version: B Status: RL (released | freigegeben) printed: 10.10.2026

valvesgo.com

7 INSTALLATION

DANGER!

Risk of injury due to high pressure and escaping medium.

- Switch off the pressure before working on the device or system. Vent or drain the pipes.
- For valve body with flange connection: check seals are seated correctly.

NOTE!

- Do not uninstall proportional valve.
- Adjusting screw (see “Fig. 1” on page 9) do not adjust.

7.1 Installation position

Any installation position, preferably with the actuator facing up.

7.2 Prior to installation

→ Clean pipes and flange connections.

→ Dirt trap in the direction of the current before the valve (mesh width 0.02... 0.4 mm, depending on nominal diameter).

→ For valve body with flange connection:
check the seals are correctly seated on the underside of the valve body (see “Fig. 2”).

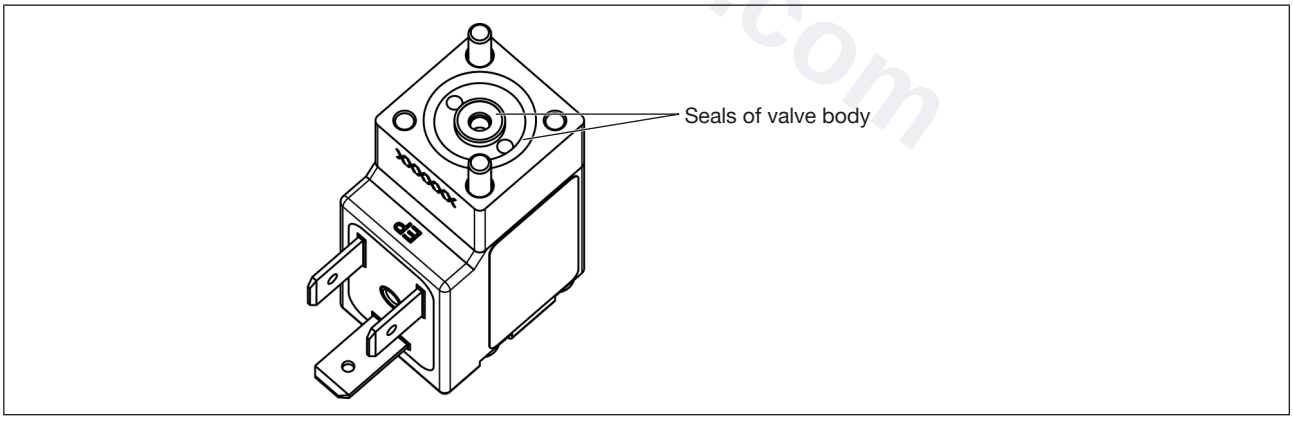

Fig. 2: Seals of valve body with flange connection

valvesgo.com

MAN 1000609322 EN Version: B Status: RL (released | freigegeben) printed: 10.10.2026

7.3 Screw in valve in pipe (threaded connection)

NOTE!

- Use an open-end wrench for installation.
- Do not use the coil as a lever arm.

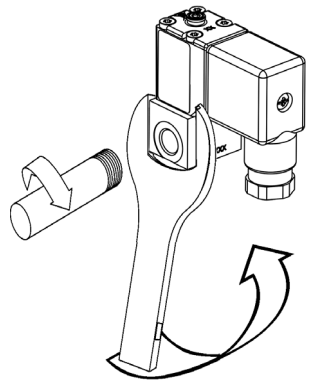

→ Hold the proportional valve with an open-end wrench on the valve body.

→ Screw into pipe.

→ Check installation for tightness.

7.4 Install valve on base block (flange connection)

→ Fasten the valve to the base block using both fastening screws.
Tightening torque 0.8...1.2 Nm.

MAN 1000609322 EN Version: B Status: RL (released | freigegeben) printed: 10.10.2026

valvesgo.com

8 ELECTRICAL INSTALLATION

DANGER!

Risk of injury from electric shock.

- Switch off voltage before working on the device or system. Secure against reactivation.
- Observe any applicable accident prevention and safety regulations for electrical devices.

Risk of injury from improper installation.

- Only trained technicians may perform installation work.
- Perform installation work using suitable tools only.

Risk of injury due to unintentional activation of the system and uncontrolled restart.

- Secure the system against unintentional activation.
- Ensure a controlled restart.

8.1 Connecting the cable plug

NOTE!

- Observe operating voltage and current type according to type label.
- Ensure that the seal is properly seated.

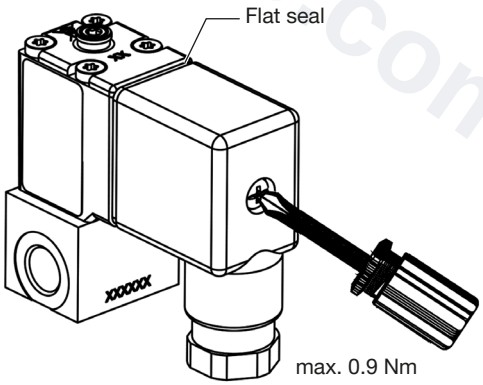

→ Insert flat seal.

→ Plug in cable plug and fasten with screw. Tightening torque max. 0.9 Nm.

→ Connect the protective conductor.

MAN 1000609322 EN Version: B Status: RL (released | freigegeben) printed: 10.10.2026

9 CONTROL ELECTRONICS

DANGER!

Risk of injury.

- When using the control electronics, read and understand the type 8605 operating instructions at country.burkert.com.

NOTE!

Functional impairment with incorrect PWM frequency.

- Set correct PWM frequency (see "9.1 PWM frequency").

The type 8605 control electronics (rail variant) is suitable for controlling the type 2871 proportional valve. The control electronics can be combined with all variants of the proportional valve (strand or plug).

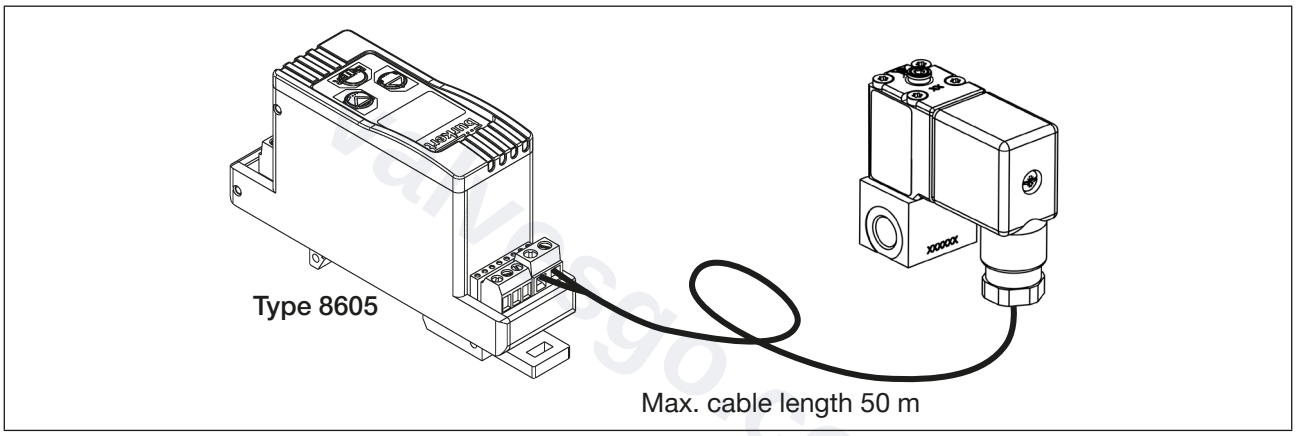

Fig. 3: Connection to type 8605 PWM control electronics with type 2507 cable plug

9.1 PWM frequency

To set the PWM frequency, see type 8605 operating instructions at country.burkert.com.

Type	Voltage	Power rating type label	PWM frequency		Current
	[V]	[W]	f_{LO} [Hz]	f_{HI} [Hz]	I_{max} [mA]
2871	24	2	1,400	1,500	85
2871	12	2	1,400	1,500	185
2871	24	5	1,400	1,500	220
2871	12	5	1,400	1,500	420
2871 for high Δp (NF64)	24	5	800	1,000	220
2871 for high Δp (NF64)	12	5	800	1,000	420

Fig. 4: PWM frequency type 2871

MAN 1000609322 EN Version: B Status: RL (released | freigegeben) printed: 10.10.2026

valvesgo.com

10 MAINTENANCE AND TROUBLESHOOTING

10.1 Maintenance

The valve operates maintenance-free under normal conditions.

10.2 Troubleshooting

Check in case of faults:

- Port connections
- Operating pressure within the permissible range
- Power supply and valve control

valvesgo.com

MAN 1000609322 EN Version: B Status: RL (released | freigegeben) printed: 10.10.2026

11 TRANSPORTATION, STORAGE, DISPOSAL

NOTE!

Damage in transit due to inadequately protected devices.

- Protect the device against moisture and dirt in shock-resistant packaging during transportation.
- Observe permitted storage temperature.

Incorrect storage may damage the device.

- Store the device in a dry and dust-free location.

Permitted storage temperature: –20…+70 °C

Environmentally friendly disposal

- Follow national regulations regarding disposal and the environment.
- Collect electrical and electronic devices separately and dispose of them as special waste.

Further information at country.burkert.com.

valvesgo.com

MAN 1000609322 EN Version: B Status: RL (released | freigegeben) printed: 10.10.2026