bürkert
FLUID CONTROL SYSTEMS

MAN 1000347662 EN Version: G Status: RL (released | freigegeben) printed: 14.07.2026

# Type 6407

Servo-assisted 2/2-way piston valve

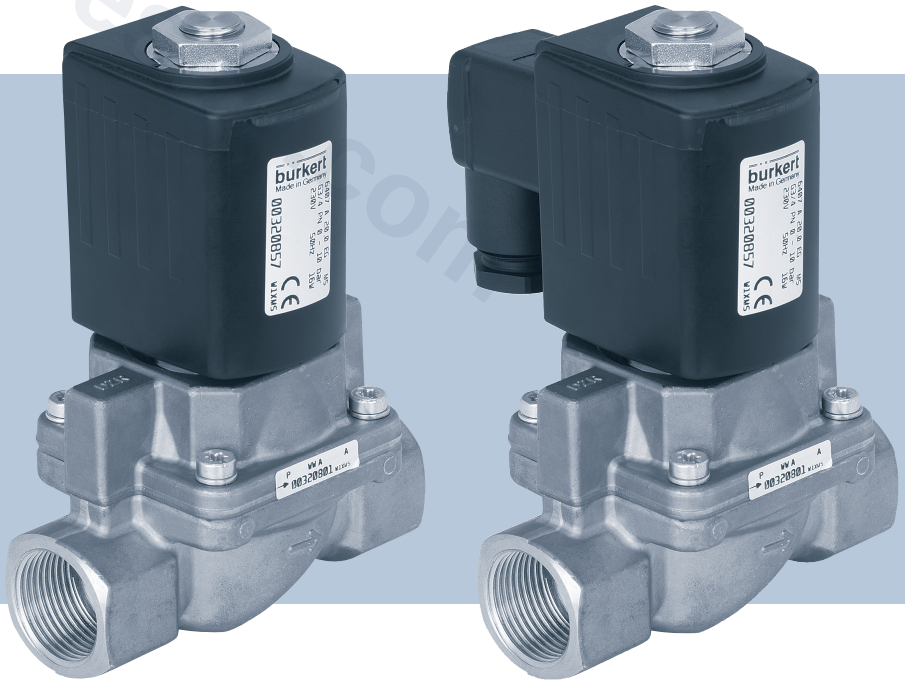

## Operating Instructions

valvesgo.com

MAN 1000347662 EN Version: G Status: RL (released | freigegeben) printed: 14.07.2026

We reserve the right to make technical changes without notice.
© Bürkert Werke GmbH & Co. KG 2017-2026
Technical documentation 2604/04_GBen_00810672_986672651_986782219 / Original DE

valvesgo.com

# Table of contents


| | | |
|---|---|---|
| **1** | **About this document** | **4** |
| 1.1 | Symbols | 4 |
| 1.2 | Terms and abbreviations | 5 |
| 1.3 | Manufacturer | 5 |
| **2** | **Safety** | **6** |
| 2.1 | Intended use | 6 |
| 2.2 | Basic safety instructions | 6 |
| **3** | **Technical data** | **8** |
| 3.1 | Operating conditions | 8 |
| 3.2 | Standards and directives | 8 |
| 3.3 | Usage conditions | 8 |
| 3.4 | Type label | 10 |
| **4** | **Installation** | **11** |
| 4.1 | Safety instructions | 11 |
| 4.2 | Before installation | 11 |
| 4.3 | Installation | 11 |
| 4.4 | Electrical connection of cable plug | 12 |
| **5** | **Maintenance, troubleshooting** | **13** |
| 5.1 | Safety instructions | 13 |
| 5.2 | Solenoid installation | 13 |
| 5.3 | Troubleshooting | 14 |
| **6** | **Spare parts** | **15** |
| 6.1 | Ordering spare parts | 15 |
| 6.2 | Tightening torques | 15 |
| **7** | **Logistics** | **16** |
| 7.1 | Transport and storage | 16 |
| 7.2 | Return | 16 |
| 7.3 | Disposal | 16 |


MAN 1000347662 EN Version: G Status: RL (released | freigegeben) printed: 14.07.2026

valvesgo.com


valvesgo.com

# 1 About this document

The document is an important part of the product and guides the user to safe installation and operation. The information and instructions in this document are binding for the use of the product.

- Before using the product for the first time, read and observe the whole safety chapter.
- Before starting any work on the product, read and observe the respective sections of the document.
- Keep the document available for reference and give it to the next user.
- Contact the Bürkert sales office for any questions.

Further information concerning the product at Products.

- Enter the article number from the type label in the search bar.

The illustrations in these instructions may vary depending on the product variant.

## 1.1 Symbols

**DANGER!**

Warns of a danger that leads to death or serious injuries.

**WARNING!**

Warns of a danger that can lead to death or serious injuries.

**CAUTION!**

Warns of a danger that can lead to minor injuries.

**NOTICE!**

Warns of property damage on the product or the installation.

Indicates important additional information, tips and recommendations.

Refers to information in this document or in other documents.

- Indicates a step to be carried out.

✓ Indicates a result.

Menu Indicates a software user-interface text.

MAN 1000347662 EN Version: G Status: RL (released | freigegeben) printed: 14.07.2026



valvesgo.com

## 1.2 Terms and abbreviations

The terms and abbreviations are used in this document to refer to following definitions.

| | |
|---|---|
| Product | Solenoid valve Type 6407 |

## 1.3 Manufacturer

**Bürkert Fluid Control Systems**

Christian-Bürkert-Str. 13–17

74653 Ingelfingen

GERMANY

The contact addresses are available at Contact.

Need more information or additional products?

- Explore the full range of products on our eShop.

valvesgo.com

MAN 1000347662 EN Version: G Status: RL (released | freigegeben) printed: 14.07.2026



valvesgo.com

# 2 Safety

## 2.1 Intended use

**Improper use of the Type 6407 solenoid valve may be dangerous to people, nearby equipment and the environment.**

- The device is designed for controlling, shutting off and dosing neutral media with a viscosity of up to 21 $mm^2/s$.
- Only use equipment that is approved for this type of potentially explosive atmosphere. These devices are identified by a separate Ex type label. Before use, note the information on the separate Ex type label and the Ex additional instructions or the separate Ex operating Instructions.
- With a properly connected and assembled cable plug, the device complies with degree of protection IP65 in accordance with DIN EN 60529 / IEC 60529.
- When using the device, observe the authorised data, and the operating and usage conditions specified in the contract documents and in the operating instructions.
- Prerequisites for safe and trouble-free operation are correct transport, storage and installation as well as careful operation and maintenance.
- Use the device only as intended.

## 2.2 Basic safety instructions

This safety information does not take into account any contingencies or occurrences that may arise during installation, use and maintenance of the device. The operator is responsible for observing the location-specific safety regulations, also with reference to personnel.

### Risk of injury from high pressure in the system/device

- Before working on the system or device, switch off the pressure and vent or empty the lines.

### Risk of injury from electric shock

- Before working on the system or device, switch off the power supply and secure against reactivation.
- Observe the applicable accident prevention and safety regulations for electrical devices.

### Risk of burns/fire during continuous operation.

- Keep device away from highly flammable substances and media and do not touch with bare hands.

### Risk of injury from malfunctioning valves with alternating current (AC)

A seized core will cause the coil to overheat, leading to functional failure.

- Monitor the working process for proper function.

### Risk of short circuit/escape of medium due to leaking fittings

- Make sure seals are properly seated.
- Screw valve and connection lines together carefully.

MAN 1000347662 EN Version: G Status: RL (released | freigegeben) printed: 14.07.2026


valvesgo.com

## General dangerous situations

Ensure the following to prevent injuries:

- Use the device only when it is in perfect condition and in accordance with the operating instructions.
- Do not make any modifications to the device and do not subject it to mechanical stress.
- Secure device or system to prevent unintentional activation.
- Ensure that only trained technicians carry out installation and maintenance work.
- Install the device according to the regulations applicable in the respective country.
- After an interruption in the power supply, ensure that the process is restarted in a controlled manner.
- Comply with generally accepted engineering standards.

valvesgo.com

MAN 1000347662 EN Version: G Status: RL (released | freigegeben) printed: 14.07.2026

# 3 Technical data

## 3.1 Operating conditions

### The following values are indicated on the type label (see Type label [▶ 10]):

- Voltage (tolerance ±10%) / current type
- Coil power (active power in W – at operating temperature)
- Pressure range
- Body material: brass (MS), cast iron (GG)
- Seal material: PTFE/graphite (EG), PTFE/FKM (SF), EPDM/graphite (AG)

| | |
|---|---|
| A (NC) | 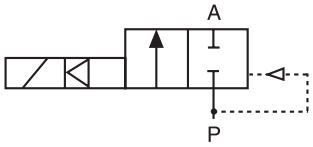  |

Tab. 1: Circuit function of 2/2-way valve

| | |
|---|---|
| Degree of protection | IP65 in accordance with DIN EN 60529/IEC 60529 with cable plug, e.g. Bürkert Type 2518 |

## 3.2 Standards and directives

This product complies with the legal requirements applicable at the time of placing on the market and has been developed and tested in accordance with the relevant European directives/regulations and harmonized standards. The conformity is documented and, if necessary, supported by evidence. The EU Declaration of Conformity can be found behind the respective type on the home page country.burkert.com

## 3.3 Usage conditions

| | |
|---|---|
| Ambient temperature | max. +45 °C<br>max. +40 °C for ATEX/IECEx |
| Storage temperature | –40... +80 °C |

### Permissible medium temperature depending on solenoid material and seal material

| Seal material | Medium temperature |
|---|---|
| PTFE/graphite | –40 °C...+150 °C |
| EPDM/Graphite | –40 °C...+135 °C |
| PTFE/FKM | –10 °C...+120 °C |
| ATEX/IECEx | max. 90 °C |

MAN 1000347662 EN Version: G Status: RL (released | freigegeben) printed: 14.07.2026

valvesgo.com


valvesgo.com

## For valves with UL/UR approval, please also note

| Media | Seal material | Variable code | Medium temperature | Ambient temperature |
|---|---|---|---|---|
| Air, inert gas | PTFE + graphite | - | –40 °C...+120 °C | –40 °C...+55 °C |
| | | NA07 | | |
| | PTFE + FKM | - | –10 °C...+120 °C | –10 °C...+55 °C |
| | | NA07 | | |
| | PTFE + graphite | - | 0 °C...+150 °C | 0 °C...+45 °C |
| | | NA07 | | |
| Water | PTFE + graphite | - | 0 °C...+100 °C | 0 °C...+55 °C |
| | PTFE + FKM | - | 0 °C...+100 °C | 0 °C...+55 °C |
| Water and steam | PTFE + graphite | NA07 | 0 °C...+150 °C | 0 °C...+45 °C |
| | PTFE + FKM | NA07 | 0 °C...+120 °C | 0 °C...+55 °C |
| Oil | PTFE + graphite | - | 0 °C...+150 °C | 0 °C...+45 °C |
| | | NA07 | | |
| | PTFE + FKM | - | –10 °C...+120 °C | –10 °C...+55 °C |
| | | NA07 | | |

| | |
|---|---|
| Operating time | Unless otherwise specified on the type label, the solenoid valve is suitable for continuous operation. Devices with Kick and Drop electronics exception: maximum duty cycle of 50% and maximum of six switching operations per minute. |

Important note for functional safety during continuous operation! During long periods of inactivity, it is recommended to operate the system at least once or twice per day.

| | |
|---|---|
| Service life | High switching frequency and high pressure will reduce overall service life. |

## Permissible media depending on the seal material

| Seal material | Permitted media |
|---|---|
| PTFE/graphite | Vacuum, neutral gases and liquid media (e.g. compressed air, water, hydraulic oil), hot water and steam |
| PTFE/FKM | |
| PTFE/EPDM | Cold and hot water, oil and grease-free media |

Fluids and high differential pressure may cause high pressure surges.

MAN 1000347662 EN Version: G Status: RL (released | freigegeben) printed: 14.07.2026


valvesgo.com

## 3.4 Type label

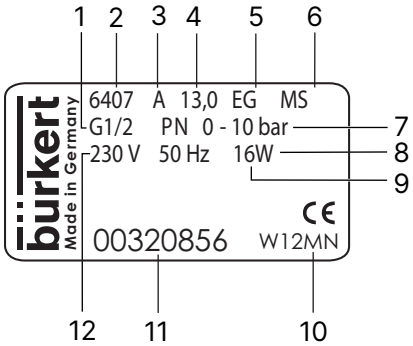


| | | | |
|---|---|---|---|
| 1 | Connection type | 2 | Type |
| 3 | Circuit function | 4 | Orifice |
| 5 | Sealing material | 6 | Body material |
| 7 | Operating pressure | 8 | Power |
| 9 | Frequency | 10 | Manufacture code |
| 11 | Article number | 12 | Voltage |

valvesgo.com

MAN 1000347662 EN Version: G Status: RL (released | freigegeben) printed: 14.07.2026

# 4 Installation

## 4.1 Safety instructions

**DANGER!**

Risk of injury due to high pressure and escaping medium

- Switch off the pressure before working on the device or system. Vent or drain the lines.

**DANGER!**

Risk of injury from electric shock

- Switch off the power supply before working on the device or system. Secure against reactivation.
  - Observe the applicable accident prevention and safety regulations for electrical devices.

**WARNING!**

Risk of injury due to improper installation

- Installation must always be carried out by trained technicians with the appropriate tools.
- Secure the system against unintentional activation.
- Ensure a controlled restart after installation.

## 4.2 Before installation

Installation position: any, preferably actuator facing up.

- Clean pipelines of dirt.
- Install a dirt trap upstream of the valve inlet (≤ 500 µm).

## 4.3 Installation

**NOTICE!**

Breaking hazard

- Do not use the solenoid as a lever arm.

- Hold the device on the body using an appropriate tool (e.g. open-end wrench) and screw into the pipeline.

The valve body must not be installed under tension. Seal material must not get into the device.

- Observe the flow direction: the arrow on the body indicates the flow direction.

MAN 1000347662 EN Version: G Status: RL (released | freigegeben) printed: 14.07.2026

valvesgo.com

## 4.4 Electrical connection of cable plug

**WARNING!**

Risk of injury from electric shock

- Before working on or inside the device or the system, switch off the power supply and secure against reactivation.
- Observe the applicable accident prevention and safety regulations for electrical devices.

**WARNING!**

Risk of electric shock if protective conductor not connected.

- Always connect protective conductor and check electrical continuity between solenoid and body.

- Screw on the cable plug (see data sheet for approved types), observing the maximum tightening torque of 1 Nm.
- Check that the seal is properly fitted.
- Connect protective conductor and check electrical continuity between solenoid and body.

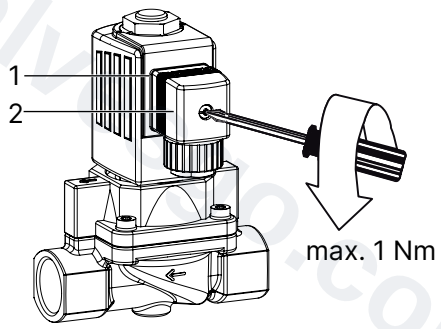


| | | | |
|---|---|---|---|
| 1 | Seal | 2 | Approved cable plug, e.g. Type 2518 or other suitable cable plug in accordance with DIN EN 175301-803, form A |

MAN 1000347662 EN Version: G Status: RL (released | freigegeben) printed: 14.07.2026


valvesgo.com

# 5 Maintenance, troubleshooting

## 5.1 Safety instructions

**DANGER!**

Risk of injury due to high pressure and escaping medium

- Switch off the pressure before working on the device or system. Vent or drain the lines.

**WARNING!**

Risk of injury due to improper maintenance work

- Maintenance may be carried out only by trained specialist technicians and with the appropriate tools.
- Secure the system against unintentional activation.
- Ensure a controlled restart after maintenance is completed.

## 5.2 Solenoid installation

**WARNING!**

Risk of injury from electric shock

- Before working on or inside the device or the system, switch off the power supply and secure against reactivation.

**WARNING!**

If the protective conductor is not connected and the solenoid is incorrectly installed, there is a risk of electric shock.

- After installing the solenoid, check the protective conductor.
- When installing, make sure that the solenoid is firmly seated on the housing lid so the protective conductor connection of the solenoid is connected to the valve body.

**WARNING!**

Risk of injury due to escaping medium

Medium may escape when a firmly fastened nut is loosened.

- Do not continue to rotate firmly fastened nuts.

**WARNING!**

Overheating, risk of fire

Connecting the solenoid without first installing the valve will lead to overheating and will destroy the solenoid.

- Only connect the solenoid after the valve has been installed.

- Position the solenoid on the core guide tube.
- Screw on the solenoid with the nut. Observe the tightening torques in the following table.

MAN 1000347662 EN Version: G Status: RL (released | freigegeben) printed: 14.07.2026

valvesgo.com

- Check the protective conductor.

**NOTICE!**

**Device damage due to incorrect tools**

Using the wrong tools (such as pliers) can damage the device.

- Always screw on the nut with an open-end wrench.

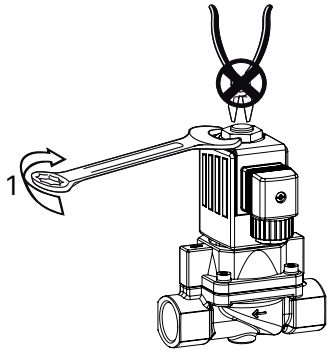


1 Observe tightening torques for fixing nut

| Type | DN | Tightening torque [Nm] | Fixing the solenoid |
|---|---|---|---|
| 6407 | 13...32 | 15 | Nut |
| 6407 | 50 | 19 | Nut |

## 5.3 Troubleshooting

### If troubleshooting occurs, check whether:

- the device is installed according to regulations,
- the electrical and fluid connections have been properly set up,
- the device is not damaged,
- all screws have been tightened,
- voltage and pressure have been applied,
- the pipelines are clean,
- the power supply is strong enough.

Possible causes when the valve does not switch:

### Possible causes when the valve does not switch:

- Short circuit or solenoid interrupted.
- Inadequate power supply,
- Core or core area contaminated,
- Medium pressure outside the permitted pressure range.

### Possible cause if the valve does not close:

- Possible cause if the valve does not close:

MAN 1000347662 EN Version: G Status: RL (released | freigegeben) printed: 14.07.2026

valvesgo.com

# 6 Spare parts

**CAUTION!**

**Risk of injury and/or damage due to incorrect parts**

Incorrect accessories and unsuitable spare parts may cause injuries and damage the device and the surrounding area.

- Use only original accessories and original spare parts from Bürkert.

## 6.1 Ordering spare parts

The following spare parts for the solenoid valve Type 6407 are available:

- Coil set (item 1)
- Armature wearing part set (item 3)
- Order the spare parts sets, specifying the items and the order number of the device.

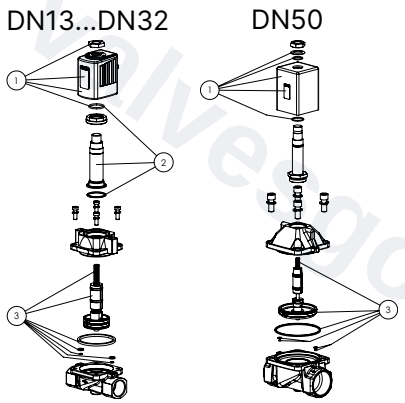


Fig. 1: Overview of spare parts

## 6.2 Tightening torques

| Type | DN | Cover screw [Nm] | Stopper with tube [Nm] |
|---|---|---|---|
| 6407 | 13 | 3.0...4.0 | 49.0...51.0 |
| 6407 | 20 | 6.0...7.0 | 49.0...51.0 |
| 6407 | 25.0<br>32.0 | 8.0...10.0 | 49.0...51.0 |
| 6407 | 50.0 | 13.0...17.0 | 110.0...115.0 |

MAN 1000347662 EN Version: G Status: RL (released | freigegeben) printed: 14.07.2026


valvesgo.com

# 7 Logistics

## 7.1 Transport and storage

- Protect the device against moisture and dirt in the original packaging during transportation and storage.
- Avoid UV radiation and direct sunlight.
- Protect connections, if present, from damage with protective caps.
- Observe the permitted storage temperature.

## 7.2 Return

**No work or tests will be carried out on the device until a valid Contamination Declaration has been received.**

- To return a used device to Bürkert, contact the Bürkert sales office. A return number is required.

## 7.3 Disposal

**Environmentally friendly disposal**

- Follow national regulations regarding disposal and the environment.
- Collect electrical and electronic devices separately and dispose of them as special waste.

Further information at country.burkert.com

MAN 1000347662 EN Version: G Status: RL (released | freigegeben) printed: 14.07.2026

valvesgo.com