bürkert
FLUID CONTROL SYSTEMS

Tank bottom diaphragm valve with pneumatic plastic actuator (Type CLASSIC)

- Valve body and diaphragm are available in various materials and variants
- Wetted surfaces from Ra ≤ 0.38 µm...≤ 1.6 µm (optionally electropolished)
- Available in all common connection sizes and variants

Product variants described in the data sheet may differ from the product presentation and description.

Can be combined with

Type SV02
Diaphragms

Type 2034
Multifunction block solutions

Type 2933
2/2-way diaphragm valve with manually operated actuator (basic)

Type 2036
Robolux multiway diaphragm valve, pneumatically operated

Type 8690
Pneumatic control unit for decentralised automation of process valves ELEMENT

Type 8697
Pneumatic control unit for decentralised automation of process valves ELEMENT

Type 8098
FLOWave SAW flowmeter

Type description

The externally controlled diaphragm valve Type 2033 consists of a pneumatically operated piston actuator, a diaphragm and a tank bottom valve body. The proven and robust actuator with a plastic housing ensures use in hygienic or aggressive ambient conditions. The flow-efficient valve bodies with little dead space enable high flow rates and a wide range of possible uses. The valve body and the diaphragm are available in all common materials and variants. The actuator has a compact, autoclavable design (PPS variant). The integration of the automation units Type 8690/8697 is possible in all configuration levels (can be retrofitted). An explosion-proof ATEX/IECEx device variant is available.

The add-on body is optionally available in plastic or stainless steel. The actuator is equipped with an integrated, optical position indicator as standard, optionally a minimum/maximum stroke limiter can be installed.

DTS 1000450595 EN Version: N Status: RL (released | freigegeben | valide) printed: 08.07.2026

© Christian Bürkert GmbH & Co. KG, Subject to alteration

valvesgo.com

Table of contents

1. General technical data 3

2. Control functions 4

3. Approvals and conformities 5

3.1. General notes 5
3.2. Conformity 5
3.3. Standards 5
3.4. Explosion protection 5
3.5. Foods and beverages/Hygiene 5
3.6. Others 6

4. Materials 6

4.1. Bürkert resistApp 6
4.2. Material specifications 6
4.3. Example of available diaphragm materials 7

5. Dimensions 8

5.1. Actuator 8
CLASSIC actuator with interface for block mounting (MT85) 8
CLASSIC actuator with tank bottom body 9
5.2. Tank bottom body with welded connection 11
5.3. Tank bottom body with clamp connection 12

6. Performance specifications 13

6.1. Medium pressure 13
Information for control function A 13

7. Product accessories 14

8. Networking and combination with other Bürkert products 15

9. Ordering information 16

9.1. Bürkert eShop 16
9.2. Bürkert product filter 16
9.3. Bürkert Product Enquiry Form 16

DTS 1000450595 EN Version: N Status: RL (released | freigegeben | valide) printed: 08.07.2026

valvesgo.com

valvesgo.com

1. General technical data

Product properties	
Dimensions	Further information can be found in chapter "5. Dimensions" on page 8.
Material	
Block body (VH) 1.)	Stainless steel block material 1.4435 according to DIN EN 10088 and 316L according to ASTM A479 / A479M
Block body (VI) 1.)	Stainless steel block material 1.4435 according to DIN EN 10088 and 316L according to ASME BPE (Table MM- 2.1.1, Ed. 2024) BN2 available on request
Diaphragm	EPDM (AD) 1.), PTFE/EPDM (EA) 1.), Advanced PTFE/EPDM (EU) 1.), laminate of GYLON® and EPDM (ER) 1.)
Actuator	PPS, PA
Diaphragm size	8...100
Standard surface quality	
Block body (VH/VI) 1.)	Internally electrically polished: Ra ≤ 0.38 µm (NO17) 1.) (ASME BPE SF4 / DIN HE4) (externally Ra ≤ 1.6 µm) Internally mechanically polished: Ra ≤ 0.5 µm (NO14) 1.) (ASME BPE SF1) (externally Ra ≤ 1.6 µm)
Performance data	
Maximum pilot pressure (CF A)	7 bar (for actuator size 40 1.)...125 1.)/PPS) 6 bar (for actuator size 175 1.) and 225 1.)/PA) See "6.1. Medium pressure" on page 13
Pilot air port	Thread G ¼, thread G ⅛ for actuator size 40 and 50
Medium data	
Operating medium	Neutral gases and liquids, highly purified, sterile, aggressive or abrasive mediums (see **resistance chart** ▶)
Medium temperature	
EPDM (AD) 1.)	- 10 °C...+ 143 °C (steam sterilisation 3.) max. + 150 °C for 60 min)
PTFE/EPDM (EA) 1.)	- 10 °C...+ 130 °C (steam sterilisation 3.) max.+ 140 °C for 60 min)
Advanced PTFE/EPDM (EU) 1.)	- 5 °C...+ 143 °C (steam sterilisation 3.) max.+ 150 °C for 60 min)
Laminate of GYLON® and EPDM (ER) 1.)	- 5 °C...+ 130 °C (steam sterilisation 3.) max.+ 140 °C for 60 min)
Control medium	Neutral gases, air
Product connections	
Port connection 2.)	
Nominal diameter	DN 06...DN 100 (⅛"...4")
Stainless steel body 2.)	
Welded connection 2.)	DIN EN ISO 1127 / ISO 4200 / DIN 11866 series B DIN 11850 - 2 / DIN 11866 series A / DIN EN 10357 series A ASME BPE / DIN 11866 series C
Clamp connection 2.)	DIN 32676 series A (DIN pipe) DIN 32676 series B (ISO pipe) ASME BPE
Environment and installation	
Installation position	See **operating manual Type 2033** ▶
Ambient temperature	
PPS, actuator size ≤ 80 mm	+ 5 °C...+ 140 °C
PPS, actuator size 100 mm, 125 mm	+ 5 °C...+ 90 °C (short-term up to + 140 °C)
PA, actuator size ≤ 125 mm	- 10 °C...+ 60 °C
PA, actuator size ≥ 175 mm	- 10 °C...+ 50 °C

1.) This information is part of the product key (see "9.3. Bürkert Product Enquiry Form" on page 16).
2.) Other variants are available on request.
3.) Extending the sterilisation time is permitted, but may affect the service life and maintenance intervals.

DTS 1000450595 EN Version: N Status: RL (released | freigegeben | valide) printed: 08.07.2026

valvesgo.com

2. Control functions

Symbol	Description
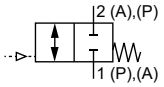	**Control function A (CF A)** Pneumatically operated tank bottom valve Normally closed by spring force
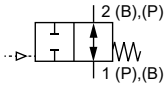	**Control function B (CF B)** Pneumatically operated tank bottom valve Normally opened by spring force
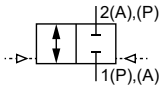	**Control function I (CF I)** Pneumatically operated tank bottom valve on either side Switching position dependent on external control

DTS 1000450595 EN Version: N Status: RL (released | freigegeben | valide) printed: 08.07.2026

valvesgo.com

valvesgo.com

3. Approvals and conformities

3.1. General notes

- The approvals and conformities listed below must be stated when making enquiries. This is the only way to ensure that the product complies with all required specifications.
- Not all available variants can be supplied with the below mentioned approvals or conformities.

3.2. Conformity

In accordance with the Declaration of Conformity, the product is compliant with the EU Directives.

3.3. Standards

The applied standards which are used to demonstrate compliance with the EU Directives are listed in the EU-Type Examination Certificate and/or the EU Declaration of Conformity.

3.4. Explosion protection

Approval	Description
	Optional: Explosion protection (valid for the variable code PX51) As a category 2 device suitable for zone 1/21 and zone 2/22. **ATEX:** EPS 18 ATEX 2 008 X II 2G Ex h IIC T4...T2 Gb II 2D Ex h IIIC T135 °C...T300 °C Db **IECEx:** IECEx EPS 18.0007X Ex h IIC T4...T2 Gb Ex h IIIC T135 °C...T300 °C Db

Temperature class	T2	T3	T4
Maximum surface temperature	+ 300 °C	+ 200 °C	+ 135 °C
Ambient temperature	- 40 °C...+ 130 °C	- 40 °C...+ 130 °C	- 40 °C...+ 100 °C
Maximum medium temperature	+ 285 °C	+ 185 °C	+ 125 °C

Note: The ambient and medium temperature range may be limited by non-ex-relevant specifications. Observe the Operating Instructions.

3.5. Foods and beverages/Hygiene

Conformity	Description
	3-A Sanitary Standards Inc. (valid for the variable code PE05) The products comply with 3-A Sanitary Standards Inc (3-A SSI) as per certificate.
FDA	**FDA – Code of Federal Regulations** The diaphragms made of EPDM (AD), PTFE/EPDM (EA), Advanced PTFE/EPDM (EU) and laminate of GYLON® and EPDM (ER) comply with the Code of Federal Regulations published by the FDA (Food and Drug Administration, USA).
USP	**United States Pharmacopeial Convention (USP)** The diaphragms made of EPDM (AD), PTFE/EPDM (EA), Advanced PTFE/EPDM (EU) and laminate of GYLON® and EPDM (ER) are tested according to USP Class VI.
	EC Regulation 1935/2004 of the European Parliament and of the Council The diaphragms made of EPDM (AD), PTFE/EPDM (EA), Advanced PTFE/EPDM (EU) and laminate of GYLON® and EPDM (ER) are suitable for use with food and beverages (according to EC Regulation 1935/2004/EC).

DTS 1000450595 EN Version: N Status: RL (released | freigegeben | valide) printed: 08.07.2026

valvesgo.com

3.6. Others

Conformity	Description
TA Luft	Technical instruction on air quality control (valid for the variable code PM01)

4. Materials

4.1. Bürkert resistApp

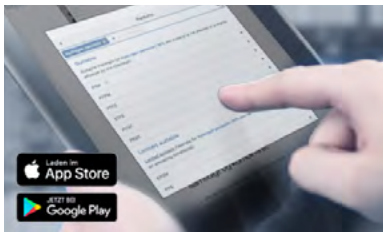

Bürkert resistApp – Chemical resistance chart

You want to ensure the reliability and durability of the materials in your individual application case? Verify your combination of media and materials on our website or in our resistApp.

Start chemical resistance check

4.2. Material specifications

Actuator size 40...125

Note:
The exemplary representation may differ from the actual product.

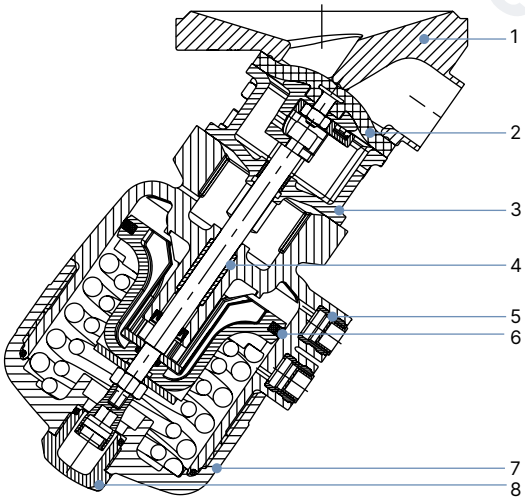

No.	Element	Material
1	Valve body	See "1. General technical data" on page 3
2	Diaphragm	EPDM (AD), PTFE/EPDM (EA), Advanced PTFE/EPDM (EU), laminate of GYLON® and EPDM (ER)
3	Interface	Stainless steel 1.4404
4	Socket	Sinter metal
5	Pilot air ports	Stainless steel 1.4305
6	Piston seal	FKM
7	Cover	Polyphenylene sulphide PPS (standard) Polyamide PA (on request)
8	Transparent cap	Polysulfone PSU

DTS 1000450595 EN Version: N Status: RL (released | freigegeben | valide) printed: 08.07.2026

valvesgo.com

Actuator size 175 and 225

Note:
The exemplary representation may differ from the actual product.

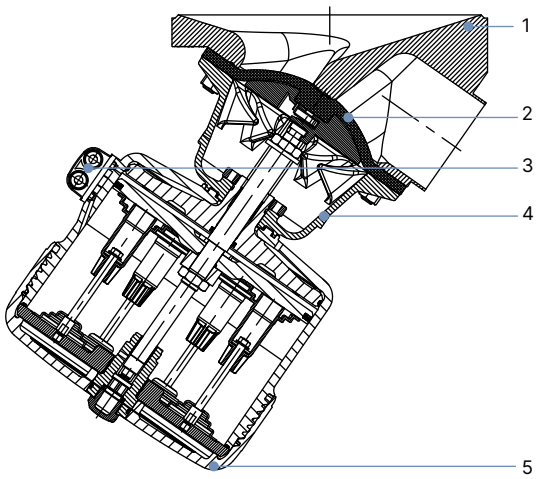

No.	Element	Material
1	Valve body	See **"1. General technical data" on page 3**
2	Diaphragm	EPDM (AD), PTFE/EPDM (EA), Advanced PTFE/EPDM (EU), laminate of GYLON® and EPDM (ER)
3	Pilot air ports	Stainless steel 1.4305
4	Diaphragm bonnet	Stainless steel 1.4308
5	Cover	Polyamide PA

4.3. Example of available diaphragm materials

The diaphragms have been developed to meet the unique challenges of hygienic and sterile requirements. Bürkert offers diaphragms with precise material composition and high accuracy. Bürkert diaphragms are available in a wide range of materials which have been tested and proven in applications in the food and beverage, biotechnology, pharmaceutical and cosmetics industries. The diaphragms are tested during development and production to ensure reliability under difficult process conditions.

- EPDM (AD)
- PTFE/EPDM (EA)
- Advanced PTFE/EPDM (EU)
- Laminate of GYLON® and EPDM (ER)

Further information can be found in our flyer "Diaphragm competence for hygienic applications" on our **website** ▶.

DTS 1000450595 EN Version: N Status: RL (released | freigegeben | valide) printed: 08.07.2026

valvesgo.com

5. Dimensions

5.1. Actuator

CLASSIC actuator with interface for block mounting (MT85)

Note:
Dimensions in mm, unless otherwise stated

Diaphragm size 8...50	Diaphragm size 65...100
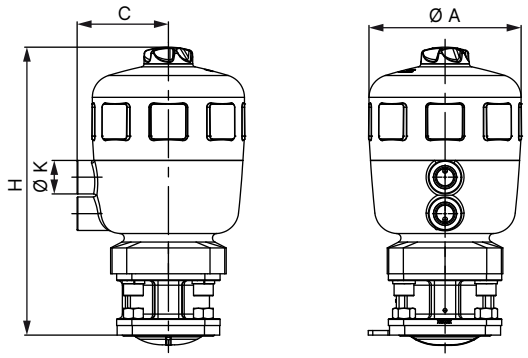	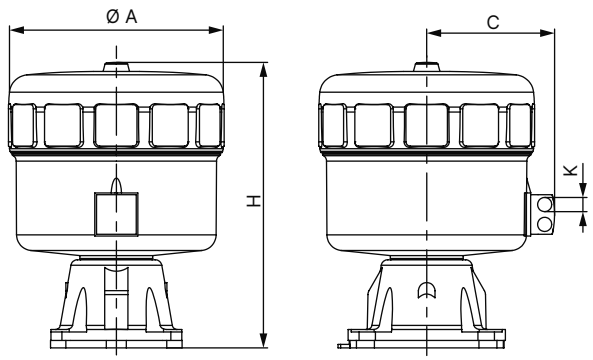

Diaphragm size	Actuator size Ø	Ø A	C	K	H
8	40 (C)	53	34	G ⅛"	111
15	50 (D)	64	39	G ⅛"	137
	63 (E)	80	52	G ¼"	154
20	63 (E)	80	52	G ¼"	165
	80 (F)	101	52	G ¼"	186
25	63 (E)	80	52	G ¼"	170
	80 (F)	101	60	G ¼"	190
40	100 (G)	127	73	G ¼"	246
	125 (H)	158	86	G ¼"	284
50	100 (G)	127	73	G ¼"	254
	125 (H)	158	86	G ¼"	288
65	175 (K)	211	130	G ¼"	350
80	175 (K)	211	130	G ¼"	350
	225 (L)	261	155	G ¼"	345
100	225 (L)	261	155	G ¼"	345

DTS 1000450595 EN Version: N Status: RL (released | freigegeben | valide) printed: 08.07.2026

valvesgo.com

CLASSIC actuator with tank bottom body

Note:
Dimensions in mm, unless otherwise stated

Tank bottom body without control unit

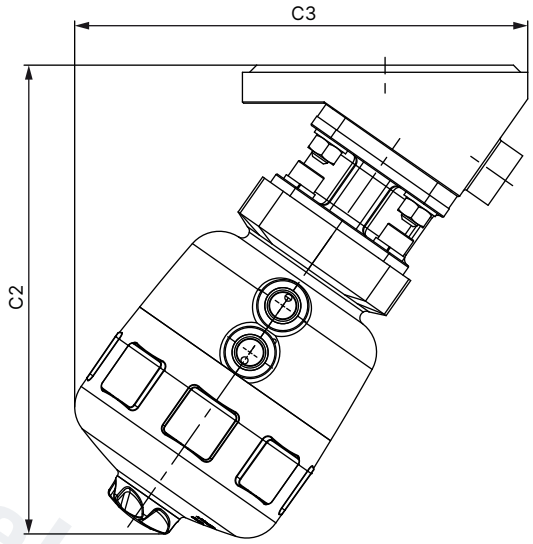

Diaphragm size	Actuator size Ø	C2	C3
15	80 (F)	–	–
20	80 (F)	190	178
25	80 (F)	199	191
40	125 (H)	296	288
50	125 (H)	304	313
65	125 (H)	394	383
	175 (K)		
80	175 (K)	390	420
	225 (L)	401	435
100	175 (K)	425	442
	225 (L)	431	455

DTS 1000450595 EN Version: N Status: RL (released | freigegeben | valide) printed: 08.07.2026

valvesgo.com

Tank bottom body with control unit Type 8697

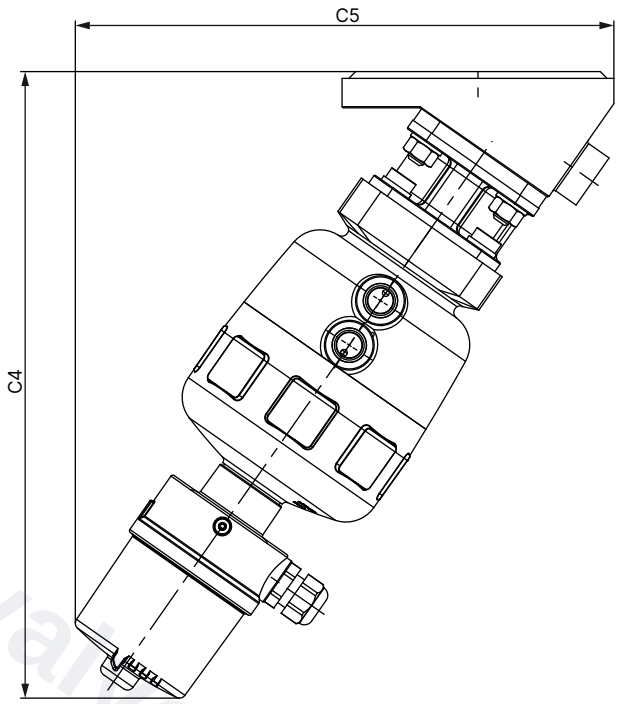

Diaphragm size	Actuator size Ø	C4	C5
15	50 (D)	215	206
	63 (E)	228	216
20	63 (E)	250	213
	80 (F)	267	225
25	63 (E)	262	228
	80 (F)	277	238
40	100 (G)	331	299
	125 (H)	369	321
50	100 (G)	340	330
	125 (H)	372	353
65	125 (H)	353	326
	175 (K)	434	382
80	175 (K)	429	434
	225 (L)	423	434
100	175 (K)	470	460
	225 (L)	464	473

DTS 1000450595 EN Version: N Status: RL (released | freigegeben | valide) printed: 08.07.2026

valvesgo.com

5.2. Tank bottom body with welded connection

Note:
Dimensions in mm, unless otherwise stated

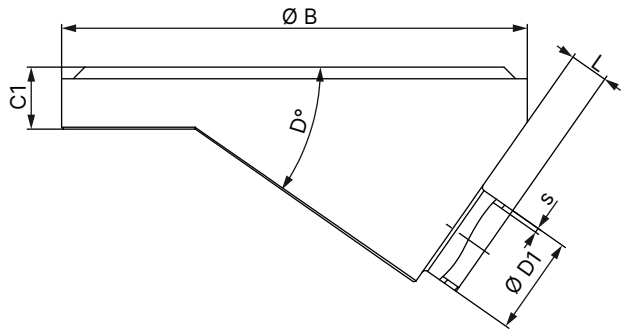

Diaphragm size	Port connection DN	ØB	C1	D	ØD1	s	L	Product key [1.)]
DIN EN ISO 1127 / ISO 4200 / DIN 11866 series B								
8	8	50	8	35°	13.5	1.6	5	SA40
15	15	65	12	35°	21.3	1.6	4	SA42
		85					8	SA42
20	20	85	12	35°	26.9	1.6	5.6	SA43
25	25	120	16	35°	33.7	2	8	SA44
40	32	150	18	35°	42.4 (Port 32)	2	20	SA45
	40				48.3		15	SA46
50	50	180	22	35°	60.3	2	12	SA47
80	65	225	20	40°	76.1	2	16	SA48
	80				88.9	2.3	10	SA49
100	100	298	30	40°	114.3	2.3	16.5	SA39
DIN 11850 - 2 / DIN 11866 series A / DIN EN 10357 series A								
8	10	50	8	35°	13	1.5	5	SD40
15	15	85	12	35°	19	1.5	8	SD42
20	20	85	12	35°	23	1.5	7	SD43
25	25	120	16	35°	29	1.5	8	SD44
40	40	150	18	35°	41	1.5	20	SD46
50	50	180	22	35°	53	1.5	15	SD47
80	80	225	20	40°	85	2	16	SD49
100	100	298	30	40°/35°	104	2	14	SD50
ASME BPE / DIN 11866 series C								
8	¼"	50	8	35°	6.35	0.89	6	SA90
15	½"	85	12	35°	12.7	1.65	10	SA92
20	¾"	85	12	35°	19.05	1.65	8	SA93
25	1"	120	16	35°	25.4	1.65	12	SODF
40	1½"	150	18	35°	38.1	1.65	15	SODH
50	1½"	180	22	35°	38.1	1.65	25	SODH
	2"				50.8		15	SODI
	2½"				63.5		11	SODJ
80	2½"	225	20	40°	63.5	1.65	25	SODJ
	3"				76.2		16	SODK
100	4"	298	30	40°	101.6	2.11	14	SODL
SMS 3008								
25	25	120	16	35°	25	1.2	8	SA60
40	40	150	18	35°	38	1.2	20	SA62
50	50	180	22	35°	51	1.2	15	SA63

1.) This information is part of the product key (see "9.3. Bürkert Product Enquiry Form" on page 16).

DTS 1000450595 EN Version: N Status: RL (released | freigegeben | valide) printed: 08.07.2026

valvesgo.com

5.3. Tank bottom body with clamp connection

Note:

- Dimensions in mm, unless otherwise stated
- The clamp dimensions must be added to the welded connection dimensions.

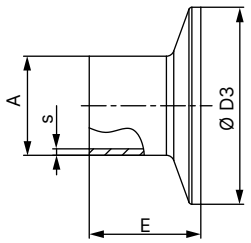

Port connection [mm]	Port connection [inch]	A	s	D3	E	Product key [1.)]
DIN 32676 series A (DIN pipe)						
10	–	13	1.5	34	18	TD41
15	–	19	1.5	34	18	TD42
20	–	23	1.5	34	18	TD43
25	–	29	1.5	50.5	21.5	TD44
32	–	35	1.5	50.5	21.5	TD45
40	–	41	1.5	50.5	21.5	TD46
50	–	53	1.5	64	21.5	TD47
65	–	70	2	91	28	TD48
80	–	85	2	106	28	TD49
100	–	104	2	119	28	TD50
DIN 32676 series B (ISO pipe)						
8	–	13.5	1.6	25	28.6	TC40
8	–	13.5	1.6	34 [2.)]	28.6	TC51 [2.)]
10	–	17.2	1.6	34 [2.)]	28.6	TC41 [2.)]
15	–	21.3	1.6	34 [2.)]	28.6	TC42 [2.)]
15	–	21.3	1.6	50.5	28.6	TC52
20	–	26.9	1.6	50.5	28.6	TC43
25	–	33.7	2	50.5	28.6	TC44
32	–	42.4	2	50.5 [2.)]	28.6	TC45 [2.)]
40	–	48.3	2	64	28.6	TC46
50	–	60.3	2	77.5	28.6	TC47
65	–	76.1	2	91	28.6	TC48
80	–	88.9	2.3	106	28.6	TC49
100	–	114.3	2.3	130	28.6	TC50
ASME BPE						
8	¼"	6.35	0.89	25	28.6	TG50
10	⅜"	9.53	0.89	25	28.6	TG01
15	½"	12.7	1.65	25	28.6	TG02
20	¾"	19.05	1.65	25	28.6	TG03
25	1"	25.4	1.65	50.5	28.6	TG04
40	1½"	38.1	1.65	50.5	28.6	TG05
50	2"	50.8	1.65	64	28.6	TG06
65	2½"	63.5	1.65	77.5	28.6	TG07
80	3"	76.2	1.65	91	28.6	TG08
100	4"	101.6	2.11	119	28.6	TG09

1.) This information is part of the product key (see "9.3. Bürkert Product Enquiry Form" on page 16).
2.) Deviating from standard because of a different outer clamp diameter

DTS 1000450595 EN Version: N Status: RL (released | freigegeben | valide) printed: 08.07.2026

valvesgo.com

6. Performance specifications

6.1. Medium pressure

Information for control function A

Note:

- For low operating pressures, optional variants with reduced spring force (EC04) are recommended.
- Pressure data [bar]: Overpressure to atmospheric pressure. Static: When closed, the valve is pressurised on one side with the maximum operating pressure.
- Information for control function B and I is available on request.

Diaphragm size	Actuator size Ø	Pilot pressure	Maximum static operating pressure for seal materials	
			EPDM, FKM	PTFE/EPDM, advanced PTFE/EPDM, laminate of GYLON® and EPDM
	[mm]	[bar]	[bar]	[bar]
8	40 (C)	5.0...7	10	10
15	50 (D)	5.0...7	10	–
	63 (E)	5.0...7	10	10
20	63 (E)	5.5...7	10	10
	80 (F)	5.0...7	10	10
25	80 (F)	5.5...7	10	10
40	100 (G)	5.5...7	10	9 [1.)]
	125 (H)	5.5...7	10	10
50	125 (H)	5.5...7	10	10
65	175 (K)	5.0...6	10	6
80	175 (K)	5.0...6	7	4 [2.)]
	225 (L)	5.0...6	10	10
100	225 (L)	5.0...6	10	7

1.) The maximum operating pressure for laminate of GYLON® and EPDM (ER diaphragm) is 6 bar.
2.) The tightness value only applies to laminate of GYLON® and EPDM (ER diaphragm), otherwise 0 bar for PTFE/EPDM and advanced PTFE/EPDM (EA and EU diaphragms).

DTS 1000450595 EN Version: N Status: RL (released | freigegeben | valide) printed: 08.07.2026

valvesgo.com

valvesgo.com

7. Product accessories

Electric position feedback indicator	
Type 8697 ▸ Actuator size Ø 40...225 mm	
	The position feedback Type 8697 is designed for integrated mounting on CLASSIC series 20XX process valves, suiting the requirements of hygienic process environments. Mechanical or inductive limit switches register the position of the valve. **Features** • Compact design • LED position indicator • Mechanical or inductive limit switches for end position registering • Easy-to-clean clean chemically resistant housing featuring IP65/IP67, 4X Rating • Optionally intrinsically safe variant according to IECEx **Customer benefits** • Easy and quick installation • High level of signal reliability thanks to self-adjusting limit switches • Minimised space requirement in the plant piping for more flexibility in plant design

valvesgo.com

DTS 1000450595 EN Version: N Status: RL (released | freigegeben | valide) printed: 08.07.2026

valvesgo.com

8. Networking and combination with other Bürkert products

Note:
The **on/off CLASSIC valve system Type 8801-DG** consists of **diaphragm valve Type 2033** and a **position feedback, Type 8697**.

You order two components and receive a completely assembled and tested valve.

Example:

Diaphragm valve

Typ 2033

Position feedback

Type 8697
Pneumatic control for decentralised automation of ELEMENT process valves

Valve system on/off CLASSIC

Valve system
Type 8801-DG-U

valvesgo.com

DTS 1000450595 EN Version: N Status: RL (released | freigegeben | valide) printed: 08.07.2026

valvesgo.com

9. Ordering information

9.1. Bürkert eShop

Bürkert eShop – Easy ordering and quick delivery

You want to find your desired Bürkert product or spare part quickly and order directly? Our online shop is available for you 24/7. Sign up and enjoy all the benefits.

Order online now

9.2. Bürkert product filter

Bürkert product filter – Get quickly to the right product

You want to select products comfortably based on your technical requirements?
Use the Bürkert product filter and find suitable articles for your application quickly and easily.

Try out our product filter

9.3. Bürkert Product Enquiry Form

Note:
Please see our Product Enquiry Form for a full explanation of our specification key.

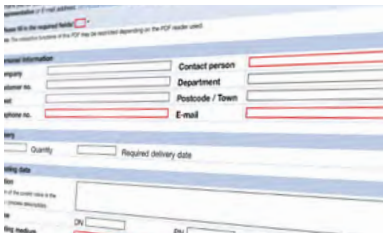

Bürkert Product Enquiry Form – Your enquiry quickly and compactly

Would you like to make a specific product enquiry based on your technical requirements? Use our Product Enquiry Form for this purpose. There you will find all the relevant information for your Bürkert contact. This will enable us to provide you with the best possible advice.

Fill out the form now

DTS 1000450595 EN Version: N Status: RL (released | freigegeben | valide) printed: 08.07.2026

valvesgo.com