bürkert
FLUID CONTROL SYSTEMS

MAN 1000748817 EN Version: - Status: RL (released | freigegeben) printed: 29.07.2026

Type 2033

CLASSIC

Tank bottom diaphragm valve with pneumatic plastic actuator

Operating Instructions

valvesgo.com

MAN 1000748817 EN Version: - Status: RL (released | freigegeben) printed: 29.07.2026

valvesgo.com

We reserve the right to make technical changes without notice.
© Bürkert Werke GmbH & Co. KG 2003-2026
Technical documentation 2607/00_GBen__1413950859_1414384267 / Original DE

Table of contents

1	**About this document**	**5**
1.1	Symbols	5
1.2	Terms and abbreviations	6
1.3	Manufacturer	6
2	**Safety**	**7**
2.1	Intended use	7
2.2	Safety instructions	7
3	**Product description**	**11**
3.1	Product overview	11
3.2	Product identification	12
3.2.1	Type label	12
3.2.2	Labelling on block material valve body	13
3.2.3	Determination of actuator size	13
3.3	Functionality	14
4	**Technical data**	**15**
4.1	Standards and directives	15
4.2	Operating conditions	15
4.2.1	Permissible temperatures	15
4.2.2	Operating pressure	17
4.2.3	Pilot pressure	19
4.3	General technical data	25
5	**Installation**	**26**
5.1	Notes on installation	26
5.2	Installation position	26
5.3	Welding the tank bottom valve body into the container base	27
5.4	Removing the actuator from the valve body	28
5.5	Installing the actuator on the valve body	29
5.5.1	Control function A: Installing the actuator on the valve body	29
5.5.2	Control functions B and I: Installing the actuator on the valve body	31
5.6	Compressor	33
6	**Additional information for devices with 3-A approval (code PE05)**	**34**
6.1	Safety instructions for installation and maintenance	34
6.1.1	Removing the compressor for diaphragm sizes 65 and 80	35
7	**Pneumatic connection**	**36**
7.1	Connecting the device pneumatically	36
8	**Commissioning**	**37**
8.1	Commission the device	37
9	**Maintenance**	**38**
9.1	Actuator	38
9.2	Wearing parts	38
9.3	Inspection intervals	38
9.4	Service life of the diaphragm	39
9.5	Cleaning	39

MAN 1000748817 EN Version: - Status: RL (released | freigegeben) printed: 29.07.2026

valvesgo.com

valvesgo.com

10 Repair 40
10.1 Replacing the diaphragm 40
10.1.1 Control function A: Replacing the diaphragm 41
10.1.2 Control functions B and I: Replacing the diaphragm 43
10.1.3 Switching between PTFE diaphragm and EPDM diaphragm 45
10.2 Changing the seal set 47
10.2.1 Required spare parts and tools 47
10.2.2 Control function A: Changing the seal set 49
10.2.3 Control functions B and I: Changing the seal set 53
10.3 Converting the control function 57
10.3.1 Required spare parts and tools 57
10.3.2 Converting control function A to control function B 58
10.3.3 Converting control function A to control function I 61

11 Troubleshooting 64
11.1 Actuator does not switch 64
11.2 Valve is not tight 64
11.3 Flow rate reduced 64

12 Disassembly 65

13 Spare parts 66
13.1 Seal set 66
13.2 Diaphragm 67

14 Conversion kit 69

15 Accessories 70
15.1 Installation wrench for actuator cover 70
15.2 Additional Information 71

16 Logistics 72
16.1 Transport and storage 72
16.2 Return 72
16.3 Disposal 72

17 Appendix 73
17.1 Storage of elastomer parts 73

MAN 1000748817 EN Version: - Status: RL (released | freigegeben) printed: 29.07.2026

valvesgo.com

valvesgo.com

1 About this document

The document is an important part of the product and guides the user to safe installation and operation. The information and instructions in this document are binding for the use of the product.

- Before using the product for the first time, read and observe the whole safety chapter.
- Before starting any work on the product, read and observe the respective sections of the document.
- Keep the document available for reference and give it to the next user.
- Contact the Bürkert sales office for any questions.

Further information concerning the product at Products.

- Enter the article number from the type label in the search bar.

The illustrations in these instructions may vary depending on the product variant.

1.1 Symbols

DANGER!

Warns of a danger that leads to death or serious injuries.

WARNING!

Warns of a danger that can lead to death or serious injuries.

CAUTION!

Warns of a danger that can lead to minor injuries.

NOTICE!

Warns of property damage on the product or the installation.

Indicates important additional information, tips and recommendations.

Refers to information in this document or in other documents.

- Indicates a step to be carried out.

✓ Indicates a result.

Menu Indicates a software user-interface text.

MAN 1000748817 EN Version: - Status: RL (released | freigegeben) printed: 29.07.2026

valvesgo.com

1.2 Terms and abbreviations

The terms and abbreviations are used in this document to refer to following definitions.

Device	Diaphragm valve Type 2033
DS	Diaphragm size
Operating pressure	Pressure at which the operating medium is present in the pipeline during system operation and flows through the valve.
Pilot pressure	Pressure used for the control or pilot control of a valve to change its switching position.
bar, bar (g)	Unit for relative pressure
Ex area	Potentially explosive atmosphere
Ex approval	Approval for potentially explosive atmosphere

1.3 Manufacturer

Bürkert Fluid Control Systems

Christian-Bürkert-Str. 13–17

74653 Ingelfingen

GERMANY

The contact addresses are available at Contact.

Need more information or additional products?

- Explore the full range of products on our eShop.

Service and support

Direct contact with Bürkert service.

MAN 1000748817 EN Version: - Status: RL (released | freigegeben) printed: 29.07.2026

valvesgo.com

valvesgo.com

2 Safety

2.1 Intended use

The device is designed to control the flow of media. The permissible media are listed in chapter Technical data [▸ 15]

Prerequisites for safe and trouble-free operation are proper transport, storage, installation, commissioning, operation and maintenance.

The instructions are part of the device. The device is intended exclusively for use within the scope of these instructions. Uses of the device that are not described in these instructions, the contractual documents or the type label can lead to severe personal injury or death, damage to the device or property and dangers for the surrounding area or the environment.

- Only use the device for media that do not attack the body and seal materials. Information on the chemical resistance of materials in contact with media is available in the Bürkert resistApp.
- Protect the device against electromagnetic interference, UV rays and, when installed outdoors, the effects of climatic conditions.
- Only trained and qualified personnel may install, operate and maintain the device. See qualification of persons in Safety instructions [▸ 7]
- Use the device only in conjunction with third-party devices and components recommended and authorized by Bürkert.
- Use the device only when it is in perfect condition.
- Observe the Operating conditions temperature ranges listed.

2.2 Safety instructions

Qualification of personnel working with the device

Improper use of the device can lead to serious personal injury or death. To avoid accidents when working with the device, the following minimum requirements must be met:

- Understand the instructions and implement the information contained therein accordingly.
- Detect and avoid dangers when working on the device.
- Safely carry out work on the device within the scope of these instructions.

Responsibility of the operator

The operator is responsible for observing the location-specific safety regulations, also in relation to personnel.

- Observe the general rules of technology.
- Install the device according to the regulations applicable in the respective country.
- The operator must make hazards arising from the location of the device avoidable by providing appropriate operating instructions.

Technical limit values and media

Non-compliance with technical limit values or unsuitable media can damage the device and lead to leaks. This can cause accidents and seriously injure or kill people.

MAN 1000748817 EN Version: - Status: RL (released | freigegeben) printed: 29.07.2026

valvesgo.com

valvesgo.com

- Comply with limit values. See Technical data [▸ 15] and information on the type label.
- Only feed media into the media ports that are listed in the chapter Technical data [▸ 15].
- Observe the safety data sheet for the media used.

Working on the device

Working on the device that has not been powered down, unauthorised switching on or uncontrolled start-up of the system can cause accidents. This can lead to serious personal injury or death.

- Only work on the device when it is not in use.
- Ensure that the device or system cannot be switched on unintentionally.
- Only start the process in a controlled manner following disruptions. Observe sequence:
  1. Apply supply voltage or pneumatic supply.
  2. Charge the device with medium.

Changes and other modifications, spare parts and accessories

Changes to the device, incorrect installation or use of non-approved devices or components create hazards that can lead to accidents and injuries.

- Do not make any changes to the device.
- Do not mechanically load the device.
- Observe the operating instructions of the device or component used.
- Only use the devices in conjunction with devices and components recommended or approved by Bürkert.

Spare parts and accessories that do not meet Bürkert's requirements may impair the operational safety of the device and cause accidents.

- To ensure operational safety, only use original parts from Bürkert.

Operation only after proper transport, storage, installation, commissioning, or maintenance

Improper transport, storage, installation, commissioning, or maintenance jeopardises the operational safety of the device and can cause accidents. This can lead to serious personal injury or death.

- Observe all values and limits specified in these instructions to ensure the device's safety and functionality.
- Only carry out work described in these instructions.
- Only carry out work using suitable tools.
- All other work must be carried out by Bürkert only.

Medium under pressure

Medium under pressure can seriously injure people. In the event of overpressure or pressure surges, the device or lines can burst. Pneumatic lines that are defective or not securely fastened can come loose and swing around.

- Before working on the device or system, switch off the pressure. Vent or empty the lines.
- Adhere to the permitted pressure ranges of the medium.
- Comply with the permitted temperature ranges of the medium.

MAN 1000748817 EN Version: - Status: RL (released | freigegeben) printed: 29.07.2026

valvesgo.com

valvesgo.com

Electric shock due to electrical components

Touching live parts can result in severe electric shock. This can lead to serious personal injury or death.

- Before working on the device or system, switch off the power supply. Secure it against reactivation.
- Observe any applicable accident prevention and safety regulations for electrical devices.

Contaminated pilot air

The control exhaust air of the device can be contaminated with lubricants and damage the health of people and the environment.

- Dissipate control exhaust air appropriately.
- Wear appropriate personal protective equipment when working near the device.

If exhaust air from other processes is used to generate compressed air for the device, seals may be destroyed by the media contained in the exhaust air and cause medium to escape.

- Only use fresh air for generating compressed air for the device.

Only use authorised devices in potentially explosive atmospheres

Devices that may be used in potentially explosive atmospheres are labelled with an Ex marking. Additional instructions with Ex labelling are included with these devices.

- Only use devices that are approved for use in a potentially explosive atmosphere.
- For use in potentially explosive atmospheres, observe the information on the device.
- For use in potentially explosive atmospheres, observe the additional instructions with Ex labelling.
- Do not use devices that do not have this Ex labelling and additional instructions in potentially explosive atmospheres under any circumstances.

Danger due to escaping medium

If the diaphragm is worn, medium can escape and seriously injure people.

- The relief bore must be regularly inspected for any medium leakages.
- If medium is leaking from the relief bore, replace the diaphragm.
- If the media is hazardous, protect the area surrounding the discharge point against dangers.

Hearing damage due to high noise level

Depending on the operating conditions, the device may generate loud noises.

- If the noise level exceeds 75 dB(A), wear hearing protection when near the device.

Hot surfaces and fire hazard

The surface of the device can become hot with fast-switching actuators or with hot media.

- Wear suitable protective gloves.
- Keep highly flammable substances and media away from the device.

Heavy device

During transportation or installation works, heavy devices may fall and cause injuries.

- Secure heavy device to keep it from tipping or falling over.

MAN 1000748817 EN Version: - Status: RL (released | freigegeben) printed: 29.07.2026

valvesgo.com

- If necessary, only transport, install and uninstall heavy device with the help of a second person.
- Use suitable tools.

Mechanical moving parts

- Do not reach into openings.

Actuators with control function A (CF A) or control function B (CF B) contain a preloaded spring. Opening the actuator may cause injury due to the spring snapping out.

- Do not open the actuator. Unless an instruction explicitly describes how to open it.

Information on the Pressure Equipment Directive

Bürkert devices are categorised according to the maximum permissible medium pressure indicated on the type label, the nominal diameter DN of the port connection or the included volume, and usually for compressible fluid group 1. Exceptions are documented separately.

On the type label for Bürkert devices, the permissible medium pressure is marked with Pmed, which corresponds to the PS value in the Pressure Equipment Directive. This value can be distinguished from PN or pilot pressure, for example.

In the case of devices marked with PN, the maximum permissible medium pressure can also be restricted through pressure derating based on material or temperature.

Pressure equipment that is not in any category is designed and manufactured in accordance with good engineering practice. These devices do not receive a CE marking or EU Declaration of Conformity under the Pressure Equipment Directive.

- Ensure that the media used are compatible with the device materials and do not significantly reduce the strength of pressurised components or make the device materials brittle.
- Assign the system to a pressure equipment category according to specific operating data.

MAN 1000748817 EN Version: - Status: RL (released | freigegeben) printed: 29.07.2026

valvesgo.com

valvesgo.com

3 Product description

The diaphragm valve is an externally controlled valve with a pneumatic piston actuator and diaphragm seal.

It uses neutral gases or air to control the flow of media.

The valve is self-draining when in the appropriate installation position.

3.1 Product overview

Fig. 1: Product overview of tank bottom valve Type 2033

1	Tank bottom valve body with welding flange	2	Diaphragm
3	Body screw	4	Relief bore
5	Lower pilot air port for CF A and CF I	6	Upper pilot air port for CF B and CF I
7	Transparent cap with position	8	Actuator cover
9	Diaphragm bonnet		

MAN 1000748817 EN Version: - Status: RL (released | freigegeben) printed: 29.07.2026

valvesgo.com

3.2 Product identification

3.2.1 Type label

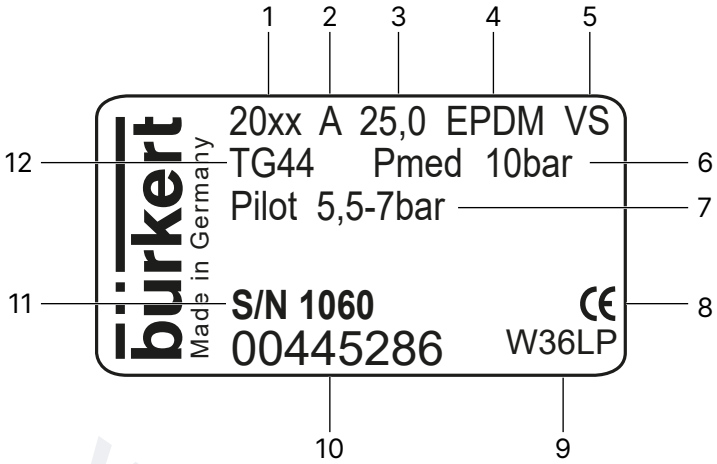

Fig. 2: Description of the type label (example)

1	Type	2	Control function
3	Diaphragm size	4	Diaphragm material
5	Valve body material	6	Operating pressure
7	Pilot pressure	8	CE marking
9	Manufacture code	10	Article number
11	Serial number	12	Port connection

MAN 1000748817 EN Version: - Status: RL (released | freigegeben) printed: 29.07.2026

valvesgo.com

3.2.2 Labelling on block material valve body

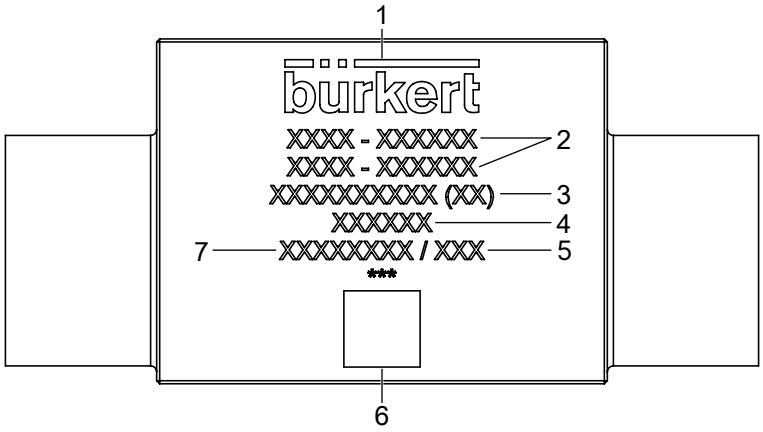

Fig. 3: Labelling on block material valve body

1	Manufacturer	2	Nominal diameter and pipe dimensions
3	Material	4	Batch number
5	Serial number	6	Data matrix code
7	Production number		

3.2.3 Determination of actuator size

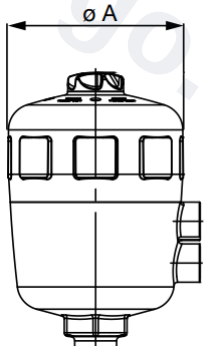

Fig. 4: Determination of actuator size based on the outer diameter A of the actuator cover

Ø A [mm]	Corresponds to actuator size
53	40 (C)
64	50 (D)
80	63 (E)
101	80 (F)
127	100 (G)
157	125 (H)
211	175 (K)
261	225 (L)

Tab. 1: Determination of actuator size

MAN 1000748817 EN Version: - Status: RL (released | freigegeben) printed: 29.07.2026

valvesgo.com

3.3 Functionality

Depending on the control function, spring force (CF A) or pneumatic pilot pressure (CF B, CF I) generates the closing force.

A spindle connected to the actuator piston transfers the force to the compressor, which presses the diaphragm against the weir in the valve body.

Symbol	Description
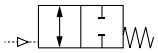	**Control function A (CF A)** Pneumatically operated tank bottom valve Closed by spring force in rest position
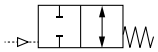	**Control function B (CF B)** Pneumatically operated tank bottom valve Opened by spring force in rest position
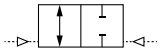	**Control function I (CF I)** Double-acting pneumatically operated tank bottom valve Switching position dependent on external control unit

Tab. 2: Control function

MAN 1000748817 EN Version: - Status: RL (released | freigegeben) printed: 29.07.2026

valvesgo.com

valvesgo.com

4 Technical data

4.1 Standards and directives

This product complies with the legal requirements applicable at the time of placing on the market and has been developed and tested in accordance with the relevant European directives/regulations and harmonized standards. The conformity is documented and, if necessary, supported by evidence. The EU Declaration of Conformity can be found behind the respective type on the home page country.burkert.com

4.2 Operating conditions

Medium	Neutral gases and liquids, ultrapure, sterile, aggressive or abrasive media (Information on the chemical resistance of materials in contact with media is available in the Bürkert resistApp)
Control medium	Neutral gases, air
Application environment	Indoors and outdoors. Protect the device against electromagnetic interference, UV rays and, when installed outdoors, the effects of climatic conditions.
Altitude	Up to 2000 m above sea level
Storage temperature	See Storage of elastomer parts [▶ 73]

4.2.1 Permissible temperatures

Ambient temperature

Actuator housing material	Actuator size	Permissible ambient temperature [°C]
PPS	≤80 (F)	+5...+140
PPS	100 (G), 125 (H)	+5...+90 (short-term up to +140)
PA	≤125 (H)	−10...+60
PA	≥175 (K)	−10...+50

Tab. 3: Permissible ambient temperature

Medium temperature

Valve body material	Permissible medium temperature [°C]
Stainless steel	−10...+140 (short-term up to 150)

Tab. 4: Permitted medium temperature

MAN 1000748817 EN Version: - Status: RL (released | freigegeben) printed: 29.07.2026

valvesgo.com

Medium temperature for diaphragms

The specified medium temperatures only apply to media that do not attack the diaphragm materials or cause it to swell up. The behaviour of the medium with respect to the diaphragm may be changed by the medium temperature. The functional properties and, in particular, the service life of the diaphragm can deteriorate as the medium temperature rises.

Do not use the diaphragms as a steam shut-off element.

Diaphragm material	Medium temperature [°C]	Comments
EPDM (AD)	−10...+143	Steam sterilisation[1] max. +150°C for 60 min
FKM (FF)	0...+130	No steam, dry heat max +150°C for 60 min
PTFE (EA)	−10...+130	Steam sterilisation[1]max. +140°C for 60 min
Advanced PTFE (EU)	−5...+143	Steam sterilisation[1] max. +150°C for 60 min
GYLON® (ER)	−5...+130	Steam sterilisation[1]max. +140°C for 60 min

Tab. 5: Medium temperatures for diaphragms

valvesgo.com

MAN 1000748817 EN Version: - Status: RL (released | freigegeben) printed: 29.07.2026

[1] Extending the sterilisation period is permitted but may affect the service life and maintenance intervals.

valvesgo.com

4.2.2 Operating pressure

Maximum permissible operating pressure for control function A

The values are valid for valve bodies made from:

- Stainless steel

Diaphragm size	Actuator size	Pilot pressure [bar]	Maximum operating pressure for seal material[2]			
			EPDM, FKM		PTFE, advanced PTFE, GYLON®	
			Dynamic [bar]	Static [bar]	Dynamic [bar]	Static [bar]
8	40 (C)	5.0–7	10	10	10	10
15	50 (D)	5.0–7	8.5	10	–	–
15	63 (E)	5.0–7	10	10	10	10
20	63 (E)	5.5–7	10	10	5	10
20	80 (F)	5.0–7	10	10	10	10
25	80 (F)	5.5–7	10	10	7.5	10
40	100 (G)	5.5–7	6.5	10	6[3]	9[4]
40	125 (H)	5.5–7	10	10	10	10
50	100 (G)	5.5–7	4.5	7.5	2.5	5
50	125 (H)	5.5–7	8	10	7	10
65	125 (H)	5.5–7	7	7.5	4	5
65	175 (K)	5.0–6	8	10	5	6
80	175 (K)	5.0–6	5	7	3[5]	4[5]
80	225 (L)	5.0–6	10	10	7[6]	10
100	225 (L)	5.0–6	8	10	4	7

Tab. 6: Maximum permissible operating pressure control function A

2) In the event of deviations, the pressure values indicated on the type label must be observed.

3) Max. operating pressure for laminated GYLON®/EPDM diaphragms: 4 bar

4) Max. operating pressure for laminated GYLON®/EPDM diaphragms: 6 bar

5) Tightness value only applies to laminated GYLON®/EPDM (ER diaphragms), otherwise 0 bar for PTFE/EPDM and advanced PTFE/EPDM (EA and EU diaphragms).

6) Max. operating pressure for laminated GYLON®/EPDM diaphragms: 8.5 bar

MAN 1000748817 EN Version: - Status: RL (released | freigegeben) printed: 29.07.2026

valvesgo.com

4.2.2.1 Static/dynamic tightness

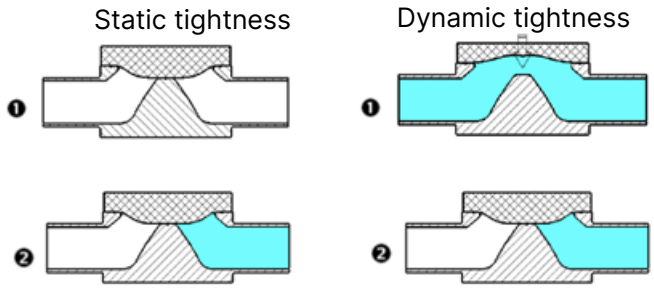

Static tightness

The diaphragm valve is in the closed state and the diaphragm is resting against the valve seat. Pressure is applied to one side of the body seat. At the specified pressure, there is no leak across the body seat.

Dynamic tightness

The medium flows through the open valve, with the outlet side restricted by downstream components. Pressure is applied to both sides of the body seat. The diaphragm valve is closed and seals tightly against the body seat at the specified pressure.

MAN 1000748817 EN Version: - Status: RL (released | freigegeben) printed: 29.07.2026

valvesgo.com

4.2.3 Pilot pressure

WARNING!

Risk of bursting due to overpressure

If the device bursts, escaping media may cause injuries, burns or scalds.

- Do not exceed the maximum permissible pilot pressure or maximum permissible operating pressure. Observe specifications on the type label.
- Observe the permissible ambient temperature and medium temperature.

NOTICE!

Malfunction due to incorrect pilot pressure

Valves with reduced spring force require reduced pilot pressure. The required values can be found on the type label.

- Observe the values indicated on the type label.
- Please contact the Bürkert sales department with any questions.

Pilot air port

The following pilot air ports can be used:

Actuator size	Pilot air port size
40 (C), 50 (D)	G 1/8
63 (E)...225 (L)	G 1/4

Permissible pilot pressure[7)]

Actuator material	Actuator size	Minimum pilot pressure [bar]	Maximum pilot pressure [bar]
PPS	40 (C)...125 (H)	2	7
PA	40 (C)...100 (G)	2	10
PA	125 (H)	2	7
PA	175 (K), 225 (L)	2	6

Tab. 7: Permissible pilot pressure

7) In the event of deviations, the pressure values indicated on the type label must be observed.

MAN 1000748817 EN Version: - Status: RL (released | freigegeben) printed: 29.07.2026

valvesgo.com

4.2.3.1 Minimum pilot pressure for control function A

The values are valid for valve bodies made from:

- Stainless steel

Diaphragm size	Actuator size	Minimum pilot pressure [bar][8] at	
		0 bar operating pressure	maximum operating pressure
8	40 (C)	5	4
15	50 (D)	5	3.5
15	63 (E)	5	4
20	63 (E)	5.5	4
20	80 (F)	5	4
25	63 (E)	5	4.5
25	80 (F)	5.5	4.5
40	100 (G)	5.5	4
40	125 (H)	5.5	4
50	100 (G)	5.5	3.5
50	125 (H)	5.5	3
65	125 (H)	5.5	4.5
65	175 (K)	6	4.5
80	175 (K)	6	5
80	225 (L)	6	5
100	225 (L)	6	5

Tab. 8: Minimum pilot pressure for control function A

MAN 1000748817 EN Version: - Status: RL (released | freigegeben) printed: 29.07.2026

[8] In the event of deviations, the pressure values indicated on the type label must be observed.

valvesgo.com

4.2.3.2 Minimum pilot pressure for control function B

The values are valid for valve bodies made from:

- Stainless steel

NOTICE!

Important for the service life of the diaphragm:

- Do not select a pilot pressure that is higher than required.

CF B
Diaphragm material
EPDM, FKM
Actuator sizes 40...80
Diaphragm sizes 8...25

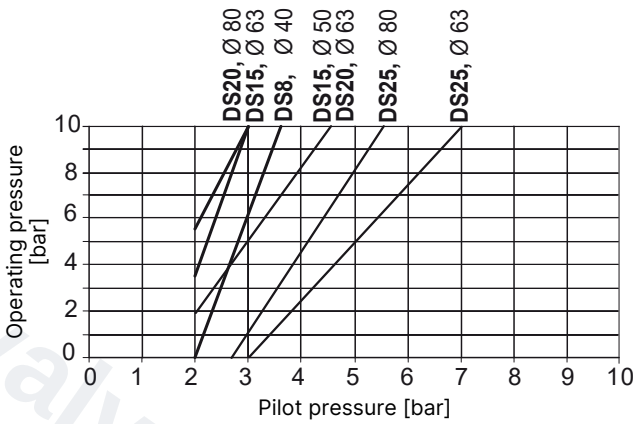

Fig. 5: Control function B, diaphragm material EPDM, FKM, actuator size 40 (C)...80 (F)

CF B
Diaphragm material
EPDM, FKM
Actuator sizes 100, 125
Diaphragm sizes 32...65

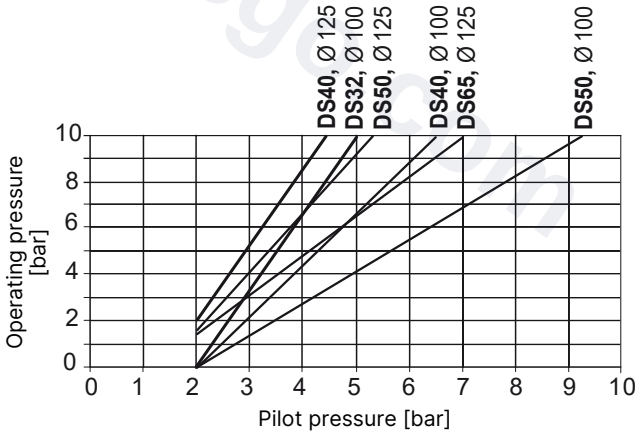

Fig. 6: Control function B, diaphragm material EPDM, FKM, actuator size 100 (G), 125 (H)

MAN 1000748817 EN Version: - Status: RL (released | freigegeben) printed: 29.07.2026

valvesgo.com

CF B
Diaphragm material
EPDM, FKM
Actuator sizes 125+175
Diaphragm sizes 65...100

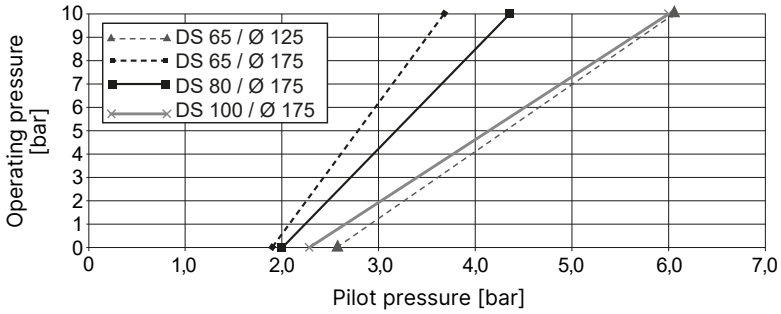

Fig. 7: Control function B, diaphragm material EPDM, FKM, actuator size 125 (H) and 175 (K)

CF B
Diaphragm material
PTFE, advanced PTFE, GYLON®
Actuator sizes 40...80
Diaphragm sizes 8...25

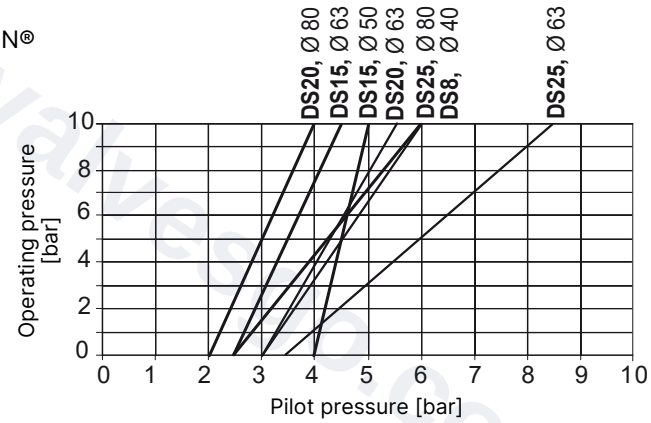

Fig. 8: Control function B, diaphragm material PTFE, advanced PTFE, GYLON®, actuator size 40 (C)...80 (F)

CF B
Diaphragm material
PTFE, advanced PTFE, GYLON®
Actuator sizes 100, 125
Diaphragm sizes 32...65

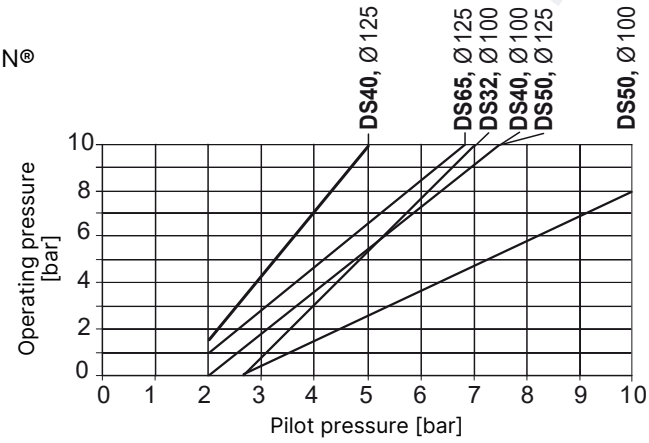

Fig. 9: Control function B, diaphragm material PTFE, advanced PTFE, GYLON®, actuator size 100 (G), 125 (H)

MAN 1000748817 EN Version: - Status: RL (released | freigegeben) printed: 29.07.2026

valvesgo.com

CF B
Diaphragm material
PTFE, advanced PTFE, GYLON®
Actuator sizes 125+175
Diaphragm sizes 65...100

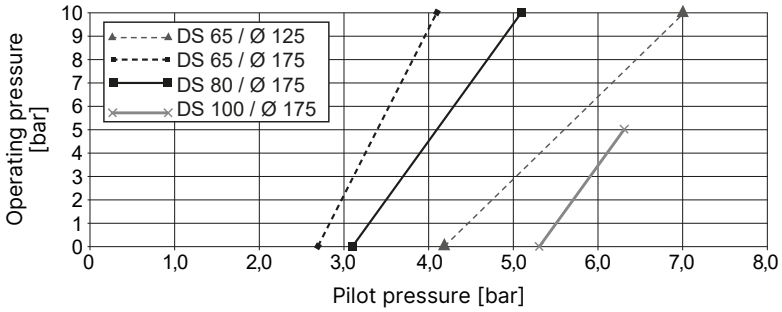

Fig. 10: Control function B, diaphragm material PTFE, advanced PTFE, GYLON®, actuator size 125 (H) and 175 (K)

4.2.3.3 Minimum pilot pressure for control function I

The values are valid for valve bodies made from:

- Stainless steel

NOTICE!

Important for the service life of the diaphragm:

- Do not select a pilot pressure that is higher than required.

CF I
Diaphragm material
EPDM, FKM
Actuator sizes 40...80
Diaphragm sizes 8...25

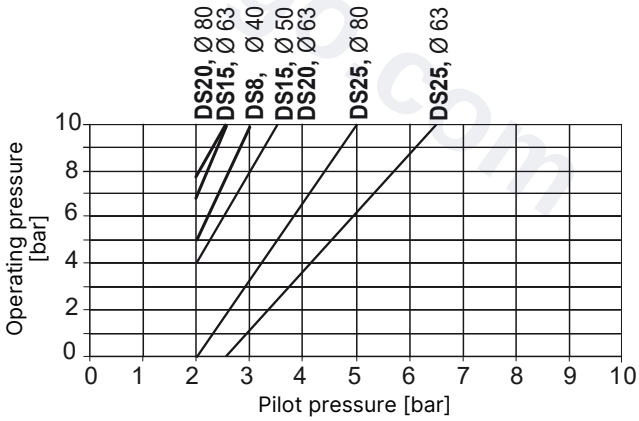

Fig. 11: Control function I, diaphragm material EPDM, FKM, actuator size 40 (C)...80 (F)

MAN 1000748817 EN Version: - Status: RL (released | freigegeben) printed: 29.07.2026

valvesgo.com

CF I
Diaphragm material
EPDM, FKM
Actuator sizes 100, 125
Diaphragm sizes 32...65

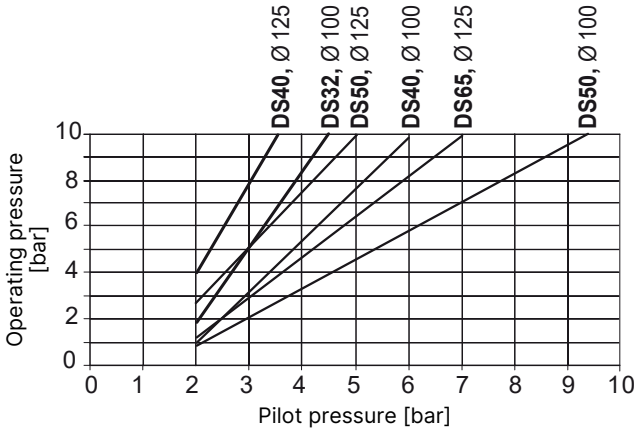

Fig. 12: Control function I, diaphragm material EPDM, FKM, actuator size 100 (G), 125 (H)

CF I
Diaphragm material
EPDM, FKM
Actuator sizes 125+175
Diaphragm sizes 65...100

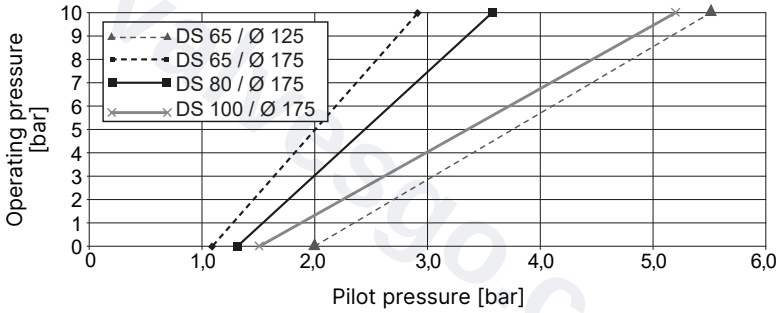

Fig. 13: Control function I, diaphragm material EPDM, FKM, actuator size 125 (H) and 175 (K)

CF I
Diaphragm material
PTFE, advanced PTFE, GYLON®
Actuator sizes 40...80
Diaphragm sizes 8...25

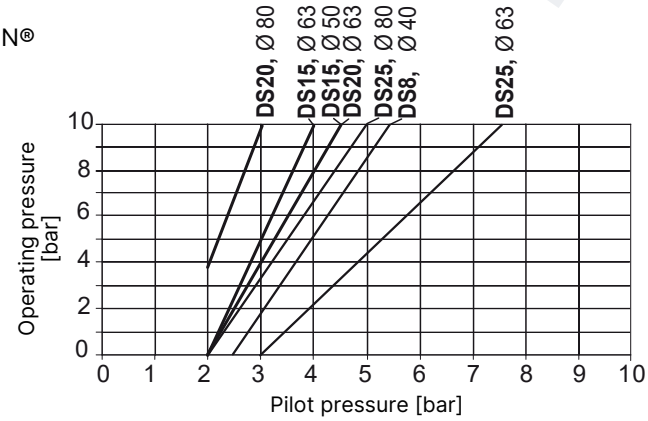

Fig. 14: Control function I, diaphragm material PTFE, advanced PTFE, GYLON®, actuator size 40 (C)...80 (F)

MAN 1000748817 EN Version: - Status: RL (released | freigegeben) printed: 29.07.2026

valvesgo.com

CF I
Diaphragm material
PTFE, advanced PTFE, GYLON®
Actuator sizes 100, 125
Diaphragm sizes 32...65

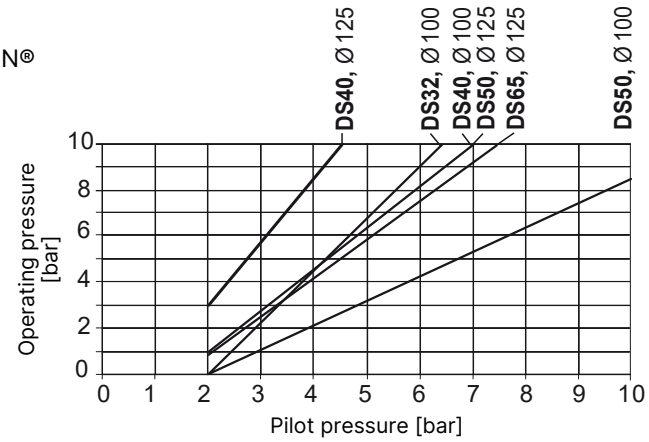

Fig. 15: Control function I, diaphragm material PTFE, advanced PTFE, GYLON®, actuator size 100 (G), 125 (H)

CF I
Diaphragm material
PTFE, advanced PTFE, GYLON®
Actuator sizes 125+175
Diaphragm sizes 65...100

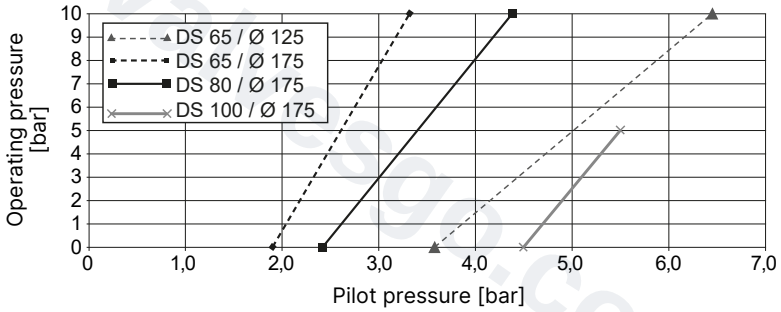

Fig. 16: Control function I, diaphragm material PTFE, advanced PTFE, GYLON®, actuator size 125 (H) and 175 (K)

4.3 General technical data

The following technical data is listed on the diaphragm valve type label:

- Control function
- Diaphragm size
- Diaphragm material
- Valve body material
- Operating pressure
- Pilot pressure

Further technical characteristics: enter the article number in the search bar at country.burkert.com and select the product.

MAN 1000748817 EN Version: - Status: RL (released | freigegeben) printed: 29.07.2026

valvesgo.com

5 Installation

Risk of injury or material damage when working on the device or system.

- Read and observe the chapter Safety [▸ 7] before working on the device or system.

Service and support

- For further information, technical advice and support, contact Bürkert service .

5.1 Notes on installation

NOTICE!

Protect the device against electromagnetic interference, UV rays and, when installed outdoors, the effects of climatic conditions.

- Installation site must be easily accessible and provide sufficient space for installation, disassembly and maintenance.
- Use suitable lifting gear to lift heavy equipment.
- Only lift heavy equipment by the valve body and pneumatic actuator, not by the control unit (if present).
- For pipelines, the inclination angles specified in the valid ASME BPE standard are recommended.
- Support and align pipelines.
- Ensure pipelines are aligned before connection.
- Ensure that pipelines are free of impurities (seal material, metal chips).
- The device and relief bore must be accessible for inspection and maintenance.

5.2 Installation position

Preferably actuator downwards.

Installation for leakage detection

One of the relief bores in the diaphragm bonnet for monitoring leakages must be at the lowest position.

MAN 1000748817 EN Version: - Status: RL (released | freigegeben) printed: 29.07.2026

valvesgo.com

valvesgo.com

5.3 Welding the tank bottom valve body into the container base

NOTICE!

Damage to the diaphragm or the actuator

The diaphragm and actuator can be damaged when welding the valve body into the container base or the pipeline.

- In the case of devices with a welded connection, remove the actuator and diaphragm from the valve body before installation.

NOTICE!

Please note when welding

- Only use welding material suitable for the tank bottom valve body.
- Avoid the tank bottom valve coming into contact with other mounting parts. It must be possible to install and remove the actuator at any time without any hindrance.
- For information on the container and welding, refer to the ASME VIII Division 1 standard.
- Before commencing welding work, check the specified batch number on the supplied manufacturer's certificate 3.1.
- Comply with the legal requirements in effect in each country regarding the qualification of welding personnel and the performance of welding work.

NOTICE!

Observe the following sequence:

1. Weld the tank bottom valve body to the container base before the container is assembled. It is possible to weld onto a ready-assembled container but it is more difficult. Note: Weld the tank bottom valve body in the middle of the container base so that the container can be optimally drained.
2. Weld the tank bottom valve body into the pipeline.

The installation is divided into the following steps:

1. Removing the actuator from the valve body [▸ 28]
2. Weld the valve body into the container base.
3. Weld the valve body into the pipeline.
   - After welding the surface of the valve body, smooth by sanding if necessary.
   - Clean the valve body carefully.
4. Installing the actuator on the valve body [▸ 29].

MAN 1000748817 EN Version: - Status: RL (released | freigegeben) printed: 29.07.2026

valvesgo.com

5.4 Removing the actuator from the valve body

1	Valve body	2	Diaphragm with identification tab
3	Body screw	4	Pilot air port below
5	Pilot air port above		

- Clamp the valve body in a holding device (only for devices which have not yet been installed).
- **NOTICE! For valves with control function A:** Pressurise the lower pilot air port with compressed air (value as indicated on the type label). This is required to detach the diaphragm without damage from the body.
  This step is not necessary for valves with control functions B and I.
- Loosen the body screws crosswise and remove the actuator and diaphragm from the valve body.

MAN 1000748817 EN Version: - Status: RL (released | freigegeben) printed: 29.07.2026

valvesgo.com

5.5 Installing the actuator on the valve body

5.5.1 Control function A: Installing the actuator on the valve body

1	Valve body	2	Diaphragm with identification tab
3	Body screw	4	Pilot air port below
5	Pilot air port above		

- Ensure the correct position of the compressor (see Compressor [▸ 33]).
  Note: Not necessary for diaphragm size 8.
- Pressurise the lower pilot air port with compressed air (value as indicated on the type label): valve opens.
- Place the actuator together with the diaphragm on the valve body.
- Slightly tighten the body screws crosswise until the diaphragm rests between the valve body and the actuator. **Do not fully tighten the screws yet.**
- Actuate the valve twice to position the diaphragm correctly.
- Switch off the pilot pressure.
- Without applying pressure, tighten the body screws in three stages (approx. 1/3, then 2/3 and then full tightening torque, as specified in the following table), in each case crosswise. The diaphragm should be positioned and pressed evenly all around the actuator and valve body.

Diaphragm size	Tightening torques [Nm] (tolerance: +10 %)	
	EPDM, FKM	PTFE, advanced PTFE, GYLON®
8	2	2.5
15	3.5	4
20	4	4.5
25	5	6
40	8	10
50	12	15

MAN 1000748817 EN Version: - Status: RL (released | freigegeben) printed: 29.07.2026

valvesgo.com

Diaphragm size	Tightening torques [Nm] (tolerance: +10 %)	
	EPDM, FKM	PTFE, advanced PTFE, GYLON®
65	20	30
80	30	40
100	40	50

Tab. 9: Tightening torques for body connection

MAN 1000748817 EN Version: - Status: RL (released | freigegeben) printed: 29.07.2026

valvesgo.com

valvesgo.com

5.5.2 Control functions B and I: Installing the actuator on the valve body

1	Valve body	2	Diaphragm with identification tab
3	Body screw	4	Pilot air port below
5	Pilot air port above		

- Ensure the correct position of the compressor (see Compressor [▸ 33]).
  Note: Not necessary for diaphragm size 8.
- Place the actuator together with the diaphragm on the valve body.
- Slightly tighten the body screws crosswise without applying pressure until the diaphragm rests between the valve body and actuator. **Do not fully tighten the screws yet.**
- Actuate the valve twice to position the diaphragm correctly.
- Pressurise the upper pilot air port with compressed air (value as indicated on the type label): valve closes.
- With pressure, tighten the body screws in three stages (approx. 1/3, then 2/3 and then full tightening torque, as specified in the following table), in each case crosswise. The diaphragm should be positioned and pressed evenly all around the actuator and valve body.

Diaphragm size	Tightening torques [Nm] (tolerance: +10 %)	
	EPDM, FKM	PTFE, advanced PTFE, GYLON®
8	2	2.5
15	3.5	4
20	4	4.5
25	5	6
40	8	10
50	12	15
65	20	30
80	30	40

MAN 1000748817 EN Version: - Status: RL (released | freigegeben) printed: 29.07.2026

valvesgo.com

Diaphragm size	Tightening torques [Nm] (tolerance: +10 %)	
	EPDM, FKM	PTFE, advanced PTFE, GYLON®
100	40	50

Tab. 10: Tightening torques for body connection

MAN 1000748817 EN Version: - Status: RL (released | freigegeben) printed: 29.07.2026

valvesgo.com

5.6 Compressor

WARNING!

Risk of crushing

If the compressor is not positioned correctly and the actuator is actuated, this may result in injuries and damage to the device.

- Before actuating the actuator, ensure that the compressor is in the correct position.

Fig. 17: Correct and incorrect position of the compressor

MAN 1000748817 EN Version: - Status: RL (released | freigegeben) printed: 29.07.2026

valvesgo.com

valvesgo.com

6 Additional information for devices with 3-A approval (code PE05)

Risk of injury or material damage when working on the device or system.

- Read and observe the chapter Safety [▸ 7] before working on the device or system.

Labelling for 3-A certified devices

Devices that have a 3-A approval are provided with additional adhesive labels. These labels are located on the actuator and are used to clearly identify the hygienic approval and the operating materials used.

Fig. 18: 3-A approval adhesive label

Lubricant information label (NSF-H1)

Information regarding the prescribed lubricant is also present on the device. Only sterile greases with NSF-H1 approval may be used. Compliance with this requirement is essential to ensure the 3-A conformity of the device and operational safety.

Only use sterile grease approved by NSF cat. H1

Fig. 19: Information regarding prescribed lubricant

6.1 Safety instructions for installation and maintenance

Devices with pneumatic actuators must be cleaned in accordance with the clean-in-place cycle. In compliance with the 3-A standard, devices with manual actuators must be disassembled before they are cleaned.

Remove the compressor after removing the actuator. Clean the area with a soft brush.

MAN 1000748817 EN Version: - Status: RL (released | freigegeben) printed: 29.07.2026

valvesgo.com

6.1.1 Removing the compressor for diaphragm sizes 65 and 80

- Move the compressor to the lower position. For control function B and I, pressurise the upper pilot air port with compressed air. For control function A, release the pilot pressure.

- Twist the compressor to remove it. The compressor guide is modified for this purpose.
- Clean the compressor and lubricate the spindle with suitable grease.

- Insert the compressor. Ensure it is positioned correctly.
- For control function B, release the pilot pressure.

MAN 1000748817 EN Version: - Status: RL (released | freigegeben) printed: 29.07.2026

valvesgo.com

7 Pneumatic connection

Risk of injury or material damage when working on the device or system.

- Read and observe the chapter Safety [▸ 7] before working on the device or system.

Service and support

- For further information, technical advice and support, contact Bürkert service .

7.1 Connecting the device pneumatically

WARNING!

Risk of injury from connection of unsuitable hoses

Inappropriate hoses can come loose and swing around.

- Use only hoses which are authorised for the indicated pressure and medium temperature range.
- Observe the data sheet specifications from the hose manufacturers.

WARNING!

For control function I: Risk of injury in the event of pilot pressure failure

The valve stays in an undefined position in the event of a pilot pressure failure.

- Switch off the pressure before working on the device or system. Vent or drain the lines.
- To ensure a controlled restart, first pressurise the device with pilot pressure, then switch on the medium.

Control function A:

- Connect the control medium to bottom of the pilot air port of the actuator.

Control function B:

- Connect the control medium to top of the pilot air port of the actuator.

Control function I:

- Connect the control medium to upper and lower pilot air port of the actuator.
  Pressure at upper pilot air port: valve closes.
  Pressure at lower pilot air port: valve opens.

Pilot air port

The following pilot air ports can be used:

Actuator size	Pilot air port size
40 (C), 50 (D)	G 1/8
63 (E)...225 (L)	G 1/4

MAN 1000748817 EN Version: - Status: RL (released | freigegeben) printed: 29.07.2026

valvesgo.com

8 Commissioning

Risk of injury or material damage when working on the device or system.

- Read and observe the chapter Safety [▸ 7] before working on the device or system.

Service and support

- For further information, technical advice and support, contact Bürkert service .

8.1 Commission the device

WARNING!

For control function I: Risk of injury in the event of pilot pressure failure

The valve stays in an undefined position in the event of a pilot pressure failure.

- Switch off the pressure before working on the device or system. Vent or drain the lines.
- To ensure a controlled restart, first pressurise the device with pilot pressure, then switch on the medium.

WARNING!

Risk of injury from high pressure or hot medium

Excessively high pressure or temperatures may damage the device and cause leaks.

- Observe values for pressure and medium temperature indicated on the type label.

In the case of devices with control unit, observe start-up in the operating instructions for the corresponding control unit.

- Adjust the pilot pressure in accordance with the information on the type label and in technical data.
- Commission the device.

MAN 1000748817 EN Version: - Status: RL (released | freigegeben) printed: 29.07.2026

valvesgo.com

valvesgo.com

9 Maintenance

Risk of injury or material damage when working on the device or system.

- Read and observe the chapter Safety [▸ 7] before working on the device or system.

Service and support

- For further information, technical advice and support, contact Bürkert service .

9.1 Actuator

The device actuator is maintenance-free if the instructions in these operating instructions are followed.

9.2 Wearing parts

Components which are subject to natural wear are:

- Seals
- Diaphragm
- If leaks occur, replace the affected wearing parts with suitable spare parts.
- The relief bore must be inspected at regular intervals for any medium leakages.

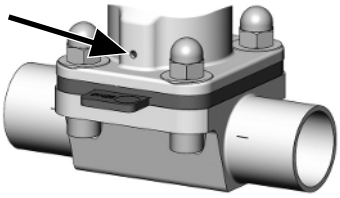

A bulging diaphragm may reduce the flow rate.

9.3 Inspection intervals

The following inspection intervals apply to the diaphragm valve:

- **After the first steam sterilisation and when required:**
  Tighten the body screws crosswise.
- **After 10^5 switching cycles at the latest:**
  Check the diaphragm for wear.

Shortened inspection intervals are required for muddy and abrasive media.

MAN 1000748817 EN Version: - Status: RL (released | freigegeben) printed: 29.07.2026

valvesgo.com

valvesgo.com

9.4 Service life of the diaphragm

The service life of the diaphragm depends on the following factors:

- Diaphragm material
- Medium
- Medium pressure
- Medium temperature
- Actuator size
- Pilot pressure for CF B and CF I

To increase the diaphragm service life, observe the following instructions:

- **For CF A:** Match the actuator size (actuator force) to the medium pressure to be actuated. If required, use the actuator with reduced spring force EC04.
- **For CF B and CF I:** Select a pilot pressure that is not higher than is required to actuate the medium pressure.

9.5 Cleaning

NOTICE!

Avoid causing damage with cleaning agents.

- Before cleaning, check that the cleaning agents are compatible with device materials and seals.

- Only use commercially available cleaning agents for external cleaning.

MAN 1000748817 EN Version: - Status: RL (released | freigegeben) printed: 29.07.2026

valvesgo.com

valvesgo.com

10 Repair

Risk of injury or material damage when working on the device or system.

- Read and observe the chapter Safety [▸ 7] before working on the device or system.

Service and support

- For further information, technical advice and support, contact Bürkert service .

10.1 Replacing the diaphragm

DANGER!

Risk of injury from sudden discharge of pressure and escaping medium

Disassembling a pressurised device can cause medium to escape unexpectedly or a sudden discharge of pressure. This can cause serious injuries.

- Before disassembly, shut off the pressure and vent all lines.
- Completely drain the lines.
- During reinstallation, check the tightening torque of the body screws.

Diaphragm size	Diaphragm material	
	PTFE and advanced PTFE	EPDM, FKM and GYLON®
≤8	Diaphragm fastening using buttons	
15, 20	Diaphragm fastening using bayonet catch	
≥25	Diaphragm fastening using bayonet catch	Diaphragm fastening using threaded connection

Tab. 11: Types of diaphragm fastening

MAN 1000748817 EN Version: - Status: RL (released | freigegeben) printed: 29.07.2026

valvesgo.com

10.1.1 Control function A: Replacing the diaphragm

1	Valve body	2	Diaphragm with identification tab
3	Body screw	4	Pilot air port below
5	Pilot air port above		

- Clamp the valve body in a holding device (only for devices which have not yet been installed).
- Pressurise the lower pilot air port with compressed air (value as indicated on the type label): valve opens.
- Loosen the body screws crosswise and remove the actuator and diaphragm from the valve body.
- Unbutton or unscrew the old diaphragm. When fastening with a bayonet catch, loosen the diaphragm by rotating it 90°. For diaphragm size ≥25, observe additional chapter Switching between PTFE diaphragm and EPDM diaphragm [▸ 45].
- Ensure the correct position of the compressor (see Compressor [▸ 33]).
  Note: Not necessary for diaphragm size 8.

NOTICE!

Damage to diaphragms with threaded connection

If the pin is live, the diaphragm may be damaged.

- First screw on the diaphragm hand-tight, then loosen it by one-half turn anticlockwise.

- Attach the new diaphragm to the compressor according to the fastening type. When fastening the diaphragm by buttoning it in, a slight twisting motion is helpful. The identification tab must be perpendicular to the flow direction.
- Place the actuator together with the diaphragm on the valve body.
- Slightly tighten the body screws crosswise until the diaphragm rests between the valve body and the actuator. **Do not fully tighten the screws yet.**
- Actuate the valve twice to position the diaphragm correctly.
- Switch off the pilot pressure.
- Without applying pressure, tighten the body screws in three stages (approx. 1/3, then 2/3 and then full tightening torque, as specified in the following table), in each case crosswise. The diaphragm should be positioned and pressed evenly all around the actuator and valve body.

MAN 1000748817 EN Version: - Status: RL (released | freigegeben) printed: 29.07.2026

valvesgo.com

Diaphragm size	Tightening torques [Nm] (tolerance: +10 %)	
	EPDM, FKM	PTFE, advanced PTFE, GYLON®
8	2	2.5
15	3.5	4
20	4	4.5
25	5	6
40	8	10
50	12	15
65	20	30
80	30	40
100	40	50

Tab. 12: Tightening torques for body connection

valvesgo.com

MAN 1000748817 EN Version: - Status: RL (released | freigegeben) printed: 29.07.2026

10.1.2 Control functions B and I: Replacing the diaphragm

1	Valve body	2	Diaphragm with identification tab
3	Body screw	4	Pilot air port below
5	Pilot air port above		

- Clamp the valve body in a holding device (only for devices which have not yet been installed).
- Loosen the body screws crosswise and remove the actuator and diaphragm from the valve body.
- Unbutton or unscrew the old diaphragm. When fastening with a bayonet catch, loosen the diaphragm by rotating it 90°. For diaphragm size ≥25, observe additional chapter Switching between PTFE diaphragm and EPDM diaphragm [▸ 45].
- Ensure the correct position of the compressor (see Compressor [▸ 33]).
  Note: Not necessary for diaphragm size 8.

NOTICE!

Damage to diaphragms with threaded connection

If the pin is live, the diaphragm may be damaged.

- First screw on the diaphragm hand-tight, then loosen it by one-half turn anticlockwise.

- Attach the new diaphragm to the compressor according to the fastening type. When fastening the diaphragm by buttoning it in, a slight twisting motion is helpful. The identification tab must be perpendicular to the flow direction.
- Place the actuator together with the diaphragm on the valve body.
- Slightly tighten the body screws crosswise without applying pressure until the diaphragm rests between the valve body and actuator. **Do not fully tighten the screws yet.**
- Actuate the valve twice to position the diaphragm correctly.
- Pressurise the upper pilot air port with compressed air (value as indicated on the type label): valve closes.
- With pressure, tighten the body screws in three stages (approx. 1/3, then 2/3 and then full tightening torque, as specified in the following table), in each case crosswise. The diaphragm should be positioned and pressed evenly all around the actuator and valve body.

MAN 1000748817 EN Version: - Status: RL (released | freigegeben) printed: 29.07.2026

valvesgo.com

Diaphragm size	Tightening torques [Nm] (tolerance: +10 %)	
	EPDM, FKM	PTFE, advanced PTFE, GYLON®
8	2	2.5
15	3.5	4
20	4	4.5
25	5	6
40	8	10
50	12	15
65	20	30
80	30	40
100	40	50

Tab. 13: Tightening torques for body connection

valvesgo.com

MAN 1000748817 EN Version: - Status: RL (released | freigegeben) printed: 29.07.2026

10.1.3 Switching between PTFE diaphragm and EPDM diaphragm

Diaphragm size	Diaphragm material	
	PTFE and advanced PTFE	EPDM, FKM and GYLON®
≤8	Diaphragm fastening using buttons	
15, 20	Diaphragm fastening using bayonet catch	
≥25	Diaphragm fastening using bayonet catch	Diaphragm fastening using threaded connection

Tab. 14: Types of diaphragm fastening

10.1.3.1 Replacement for diaphragm size ≤8

- Unbutton the diaphragm and button on the new diaphragm by turning it slightly.

10.1.3.2 Replacement for diaphragm sizes 15 and 20

- Loosen the bayonet diaphragm by turning it 90°, insert the new diaphragm and turn it 90° to secure it.

10.1.3.3 Replacement for diaphragm sizes ≥25

Switching from PTFE diaphragm to EPDM diaphragm

1 Insert	2 Compressor
3 Compressor with installed insert	

- Loosen the PTFE diaphragm by turning it 90°.
- Place the insert into the compressor.
- Screw in the EPDM diaphragm.

NOTICE!

Damage to diaphragms with threaded connection

If the pin is live, the diaphragm may be damaged.

- First screw on the diaphragm hand-tight, then loosen it by one-half turn anticlockwise.

MAN 1000748817 EN Version: - Status: RL (released | freigegeben) printed: 29.07.2026

valvesgo.com

Switching from EPDM diaphragm to PTFE diaphragm

NOTICE!

Damage to diaphragm with bayonet connection

If the insert is not removed from the compressor on diaphragms with a bayonet connection, the diaphragm and valve body may be severely damaged.

- Unscrew the EPDM diaphragm.
- Remove the insert from the compressor.
- Insert the PTFE diaphragm and turn it 90° to secure it.

MAN 1000748817 EN Version: - Status: RL (released | freigegeben) printed: 29.07.2026

valvesgo.com

valvesgo.com

10.2 Changing the seal set

DANGER!

Risk of injury from sudden discharge of pressure and escaping medium

Disassembling a pressurised device can cause medium to escape unexpectedly or a sudden discharge of pressure. This can cause serious injuries.

- Before disassembly, shut off the pressure and vent all lines.
- Completely drain the lines.
- During reinstallation, check the tightening torque of the body screws.

WARNING!

Risk of injury when unscrewing the transparent cap

If the transparent cap is pressurised when it is unscrewed, it can cause serious injuries due to high force and speed and an uncontrolled trajectory.

- Before unscrewing the transparent cap, ensure that the upper piston chamber is depressurised.

CAUTION!

Risk of injury from parts being ejected.

When opening the actuator, parts may jump out due to the tensioned spring.

- Open the actuator carefully.

The valve must be completely disassembled to replace all seals.

10.2.1 Required spare parts and tools

- Seal set [▸ 66]
- Installation wrench for actuator cover [▸ 70]
- Allen key or slotted screwdriver, open-end wrench
- Grease: Silicone grease OKS 1110-1
- Screw lock LOCTITE 274

MAN 1000748817 EN Version: - Status: RL (released | freigegeben) printed: 29.07.2026

valvesgo.com

valvesgo.com

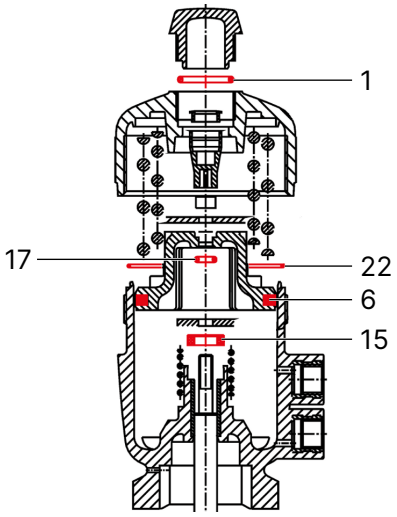

Fig. 20: Seal set components

1	O-Ring	22	O-Ring
6	Piston seal	15	Lip seal
17	O-Ring		

MAN 1000748817 EN Version: - Status: RL (released | freigegeben) printed: 29.07.2026

valvesgo.com

valvesgo.com

MAN 1000748817 EN Version: - Status: RL (released | freigegeben) printed: 29.07.2026

10.2.2 Control function A: Changing the seal set

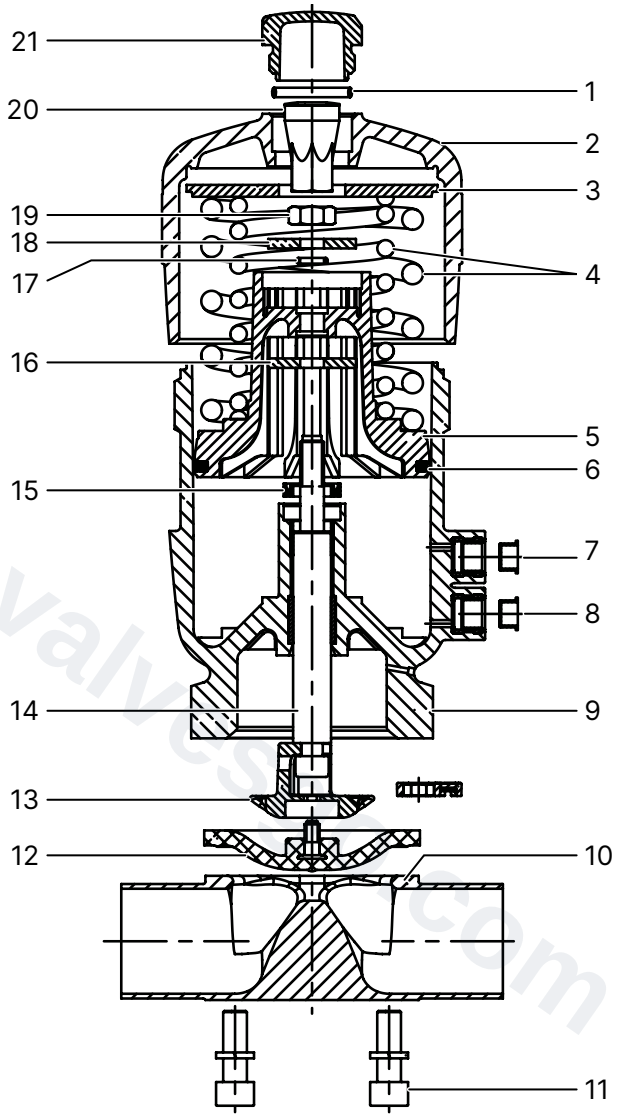

1	O-Ring	2	Actuator cover
3	Washer	4	Compression springs
5	Piston	6	Piston seal
7	Pilot air port above	8	Pilot air port below
9	Actuator housing square	10	Valve body
11	Body screw	12	Diaphragm
13	Compressor	14	Spindle
15	Lip seal	16	Intermediate washer
17	O-Ring	18	Supporting washer
19	Nut	20	Position indicator
21	Transparent cap		

- Clamp the valve body (10) in a holding device (only for valves which have not been installed).

valvesgo.com

- Pressurise the lower pilot air port (8) with compressed air (value as indicated on the type label): valve opens.
- Loosen the body screws (11) crosswise and remove the actuator and diaphragm from the valve body.
- Switch off the pilot pressure.
- Unbutton or unscrew the diaphragm (12). When fastening with a bayonet catch, loosen the diaphragm by rotating it 90°.
- Clamp the actuator at the square of the actuator housing (9).
- Unscrew the transparent cap (21) along with the O-ring (1) from the actuator cover (2).
- Unscrew the actuator cover (2) using an installation wrench.
- **Only for actuator sizes 100 (G) and 125 (H):** Remove the washer (3).
- Remove the compression springs (4).
- Uninstall the position indicator (20) using an Allen key.
- Remove the nut (19), holding it against the lower end of the spindle (14) with an Allen key or slotted screwdriver.
- Push the spindle (14) and compressor (13) down and out.
- Carefully push out the piston (5) and supporting washer (18) upwards from below.
- Remove the intermediate washer (16) and O-ring (17) from the piston (5).
- Remove the piston seal (6) from the piston (5) and clean the piston.
- **For actuator size 125 (H):** Carefully push the lock washer out over the lip seal (15).
- Carefully remove the lip seal (15) from the actuator housing.
  CAUTION! Do not damage the sealing surface on the actuator housing.
- Clean grease and dirt off all internal parts.
- Lightly coat the actuator housing with OKS 1110-1 silicone grease.
- Lightly coat the valve seat for the lip seal and spindle guide in the actuator housing with OKS 1110-1 silicone grease.
- Insert the new lip seal (15) into the actuator housing.
- **For actuator size 125 (H):** Press in the lock washer.
- Lightly coat the spindle with OKS 1110-1 silicone grease.
- Insert the spindle (14) and compressor (13) into the actuator housing from below as far as they will go.
- **CAUTION! Keep the diaphragm and diaphragm contact point free of grease.**
- Clamp the actuator at the square of the actuator housing (9).
- Slide the intermediate washer (16) onto the spindle (14) as far as it will go.
- Lightly coat the groove base on the piston (5) with OKS 1110-1 silicone grease.
- Insert the new piston seal (6) and O-ring (17) into the piston (5).
- Install the piston (5) in the actuator housing.
- Slide the supporting washer (18) over the spindle (14).
- Apply LOCTITE 274 screw lock to the spindle thread.

MAN 1000748817 EN Version: - Status: RL (released | freigegeben) printed: 29.07.2026

valvesgo.com

- Tighten the nut (19), holding it against the lower end of the spindle (14) with an Allen key or slotted screwdriver. Observe the tightening torques for the nut specified in the table below.

Actuator size	Tightening torque [Nm]
40 (C)	3.5
50 (D), 63 (E)	5.0
80 (F)	10.0
100 (G), 125 (H)	20.0

Tab. 15: Tightening torques for the nut

- Install the position indicator (20) using an Allen key. Tightening torque approx. 1.5 Nm.
- Insert the compression springs (4).
- **For actuator sizes 100 (G) and 125 (H):** Place the washer (3).
- Insert the new O-ring (1) into the actuator cover.
- Lightly coat the threads of the actuator cover with OKS 1110-1 silicone grease.
- Screw the actuator cover onto the actuator housing using an installation wrench. Observe the tightening torques for the actuator cover specified in the table.

Actuator size	Tightening torque [Nm]
40 (C)	25
50 (D)	35
63 (E)	40
80 (F)	60
100 (G)	80
125 (H)	110

Tab. 16: Tightening torques for the actuator cover

- Screw in the transparent cap (19). Tightening torque approx. 1.5 Nm.
- Install the diaphragm (12) according to the fastening type. The identification tab must be perpendicular to the flow direction.
- Clamp the valve body (10) in a holding device (only for valves which have not been installed).
- Pressurise the lower pilot air port (8) with compressed air (value as indicated on the type label): valve opens.
- Place the actuator together with the diaphragm on the valve body.
- Slightly tighten the body screws (11) crosswise until the diaphragm rests between the valve body and the actuator. **Do not fully tighten the screws yet.**
- Actuate the valve twice to position the diaphragm correctly.
- Switch off the pilot pressure.
- Without applying pressure, tighten the body screws in three stages (approx. 1/3, then 2/3 and then full tightening torque, as specified in the following table), in each case crosswise. The diaphragm should be positioned and pressed evenly all around the actuator and valve body.

MAN 1000748817 EN Version: - Status: RL (released | freigegeben) printed: 29.07.2026

valvesgo.com

valvesgo.com

Diaphragm size	Tightening torques [Nm] (tolerance: +10 %)	
	EPDM, FKM	PTFE, advanced PTFE, GYLON®
8	2	2.5
15	3.5	4
20	4	4.5
25	5	6
40	8	10
50	12	15
65	20	30
80	30	40
100	40	50

Tab. 17: Tightening torques for body connection

valvesgo.com

MAN 1000748817 EN Version: - Status: RL (released | freigegeben) printed: 29.07.2026

MAN 1000748817 EN Version: - Status: RL (released | freigegeben) printed: 29.07.2026

10.2.3 Control functions B and I: Changing the seal set

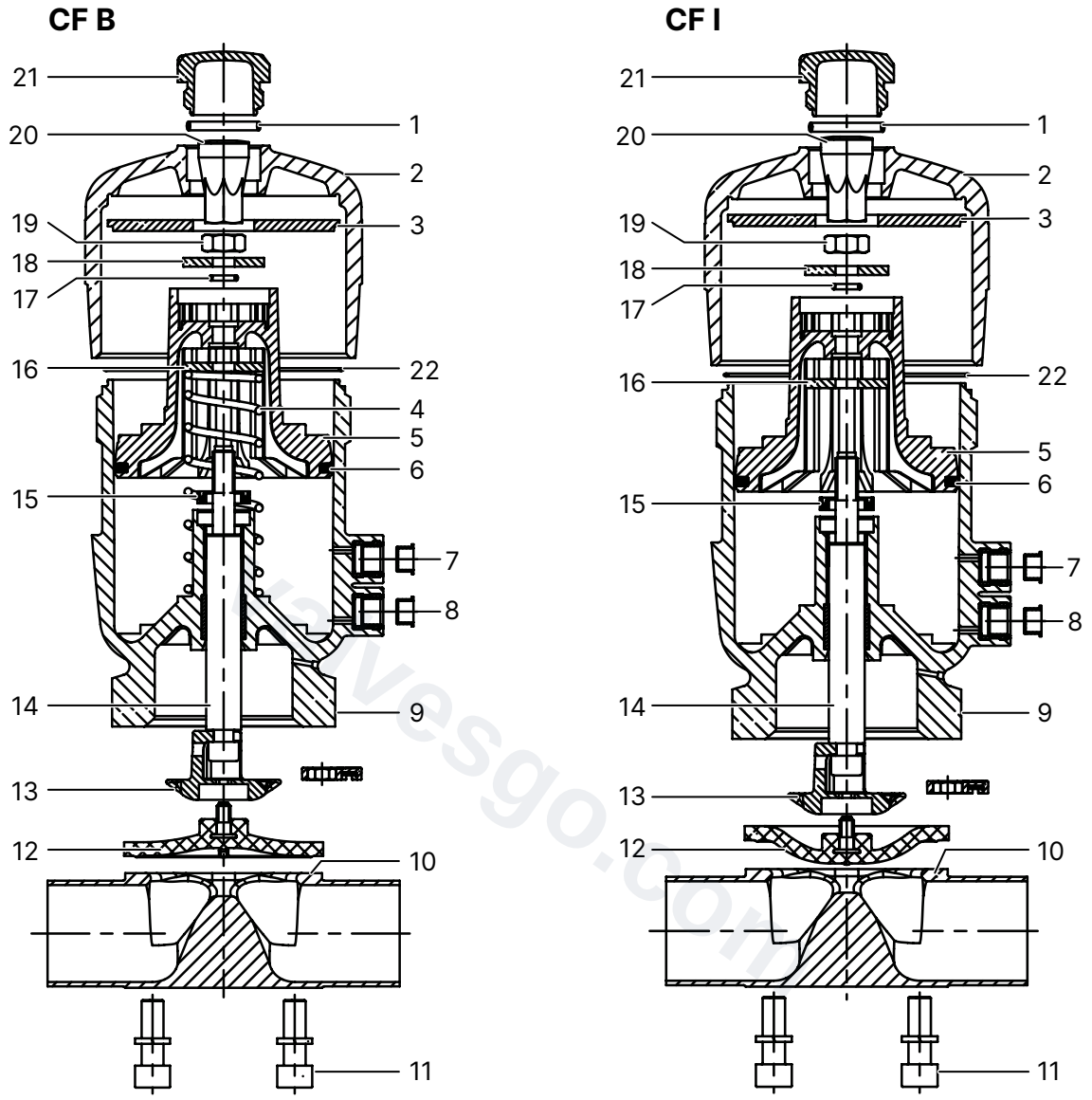

1	O-Ring	2	Actuator cover
3	Washer	4	Compression spring
5	Piston	6	Piston seal
7	Pilot air port above	8	Pilot air port below
9	Actuator housing square	10	Valve body
11	Body screw	12	Diaphragm
13	Compressor	14	Spindle
15	Lip seal	16	Intermediate washer
17	O-Ring	18	Supporting washer
19	Nut	20	Position indicator
21	Transparent cap	22	O-Ring

- Clamp the valve body (10) in a holding device (only for valves which have not been installed).

valvesgo.com

- Loosen the body screws (11) crosswise and remove the actuator and diaphragm from the valve body.
- Unbutton or unscrew the diaphragm (12). When fastening with a bayonet catch, loosen the diaphragm by rotating it 90°.
- Clamp the actuator at the square of the actuator housing (9).
- Unscrew the transparent cap (21) along with the O-ring (1) from the actuator cover (2).
- Unscrew the actuator cover (2) using an installation wrench.
- **Only for actuator sizes 100 (G) and 125 (H):** Remove the washer (3).
- Uninstall the position indicator (20) using an Allen key.

WARNING!

Control function B: Risk of injury when opening the actuator housing

There is a tensioned spring in the actuator. When opening the actuator housing, the spring may spring out and cause injuries.

- Carefully open the actuator housing and hold it in such a way that any parts that come out cannot injure people or cause damage.

- Remove the nut (19), holding it against the lower end of the spindle (14) with an Allen key or slotted screwdriver.
- Carefully remove the piston (5) and supporting washer (18).
- Remove the intermediate washer (16) and O-ring (17).
- **For control function B:** Remove the compression spring (4).
- Push the spindle (14) and compressor (13) down and out.
- **For actuator size 125 (H):** Carefully push the lock washer out over the lip seal (15).
- Carefully remove the lip seal (15) from the actuator housing.
  CAUTION! Do not damage the sealing surface on the actuator housing.
- Clean grease and dirt off all internal parts.
- Lightly coat the actuator housing with OKS 1110-1 silicone grease.
- Lightly coat the valve seat for the lip seal and spindle guide in the actuator housing with OKS 1110-1 silicone grease.
- Insert the new lip seal (15) into the actuator housing.
- **For actuator size 125 (H):** Press in the lock washer.
- Lightly coat the spindle with OKS 1110-1 silicone grease.
- Insert the spindle (14) and compressor (13) into the actuator housing from below as far as they will go.
- **CAUTION! Keep the diaphragm and diaphragm contact point free of grease.**
- Clamp the actuator at the square of the actuator housing (9).
- **For control function B:** Insert the compression spring (4).
- **For control function I:** Do not insert a compression spring.
- Slide the intermediate washer (16) onto the spindle (14) as far as it will go.
- Remove the piston seal (6) from the piston (5) and clean the piston.
- Lightly coat the groove base on the piston (5) with OKS 1110-1 silicone grease.

MAN 1000748817 EN Version: - Status: RL (released | freigegeben) printed: 29.07.2026

valvesgo.com

- Insert the new piston seal (6) and O-ring (17) into the piston (5).
- **For control function B:** Install the piston (5) in the actuator housing with the spring preloaded. To do this, press in the compression spring (4) and piston by hand until the spindle thread protrudes through the hole. Hold this position.
- Slide the supporting washer (18) over the spindle (14) as far as it will go.
- Apply LOCTITE 274 screw lock to the spindle thread.
- Tighten the nut (19), holding it against the lower end of the spindle (14) with an Allen key or slotted screwdriver. Observe the tightening torques for the nut specified in the table below.

Actuator size	Tightening torque [Nm]
40 (C)	3.5
50 (D), 63 (E)	5.0
80 (F)	10.0
100 (G), 125 (H)	20.0

Tab. 18: Tightening torques for the nut

- **For actuator sizes 100 (G) and 125 (H):** Place the washer (3).
- Insert the new O-ring (22).
- Insert the new O-ring (1) into the actuator cover (2).
- Lightly coat the threads of the actuator cover with OKS 1110-1 silicone grease.
- Screw the actuator cover onto the actuator housing using an installation wrench. Observe the tightening torques for the actuator cover specified in the table.

Actuator size	Tightening torque [Nm]
40 (C)	25
50 (D)	35
63 (E)	40
80 (F)	60
100 (G)	80
125 (H)	110

Tab. 19: Tightening torques for the actuator cover

- Install the position indicator (20) using an Allen key. Tightening torque approx. 1.5 Nm.
- Screw in the transparent cap (19). Tightening torque approx. 1.5 Nm.
- Install the diaphragm (12) according to the fastening type. The identification tab must be perpendicular to the flow direction.
- Clamp the valve body (10) in a holding device (only for valves which have not been installed).
- Place the actuator together with the diaphragm on the valve body.
- Slightly tighten the body screws (11) crosswise without applying pressure until the diaphragm rests between the valve body and actuator. **Do not fully tighten the screws yet.**
- Actuate the valve twice to position the diaphragm correctly.

MAN 1000748817 EN Version: - Status: RL (released | freigegeben) printed: 29.07.2026

valvesgo.com

- Pressurise the upper pilot air port (7) with compressed air (value as indicated on the type label): valve closes.
- Applying pressure, tighten the body screws (11) in three stages (approx. 1/3, then 2/3 and then full tightening torque, as specified in the following table), in each case crosswise. The diaphragm should be positioned and pressed evenly all around the actuator and valve body.
- Switch off the pilot pressure.

Diaphragm size	Tightening torques [Nm] (tolerance: +10 %)	
	EPDM, FKM	PTFE, advanced PTFE, GYLON®
8	2	2.5
15	3.5	4
20	4	4.5
25	5	6
40	8	10
50	12	15
65	20	30
80	30	40
100	40	50

Tab. 20: Tightening torques for body connection

MAN 1000748817 EN Version: - Status: RL (released | freigegeben) printed: 29.07.2026

valvesgo.com

10.3 Converting the control function

DANGER!

Risk of injury from sudden discharge of pressure and escaping medium

Disassembling a pressurised device can cause medium to escape unexpectedly or a sudden discharge of pressure. This can cause serious injuries.

- Before disassembly, shut off the pressure and vent all lines.
- Completely drain the lines.
- During reinstallation, check the tightening torque of the body screws.

WARNING!

Risk of injury when unscrewing the transparent cap

If the transparent cap is pressurised when it is unscrewed, it can cause serious injuries due to high force and speed and an uncontrolled trajectory.

- Before unscrewing the transparent cap, ensure that the upper piston chamber is depressurised.

This chapter describes how to convert the control function from A to B and from A to I for the following actuator sizes: 40 (C), 50 (D), 63 (E), 80 (F), 100 (G) and 125 (H).

10.3.1 Required spare parts and tools

- Conversion kit [▸ 69]
- Installation wrench for actuator cover [▸ 70]
- Allen key or slotted screwdriver, open-end wrench
- Grease: Silicone grease OKS 1110-1
- Screw lock LOCTITE 274

Conversion kit components:

Conversion from CF A to CF B

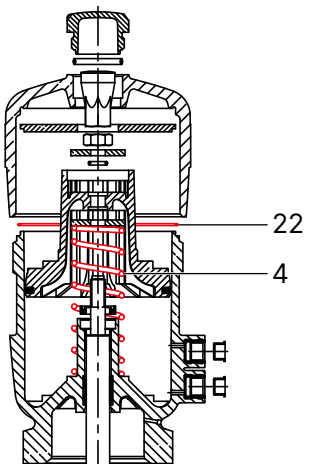

Conversion from CF A to CF I

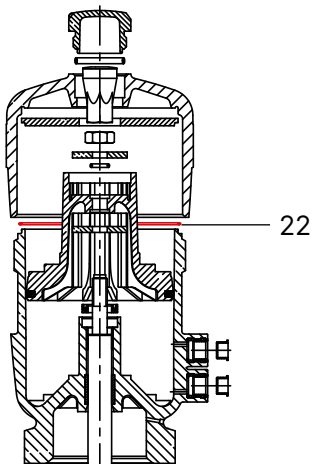

22 O-Ring	4 Compression spring

MAN 1000748817 EN Version: - Status: RL (released | freigegeben) printed: 29.07.2026

valvesgo.com

10.3.2 Converting control function A to control function B

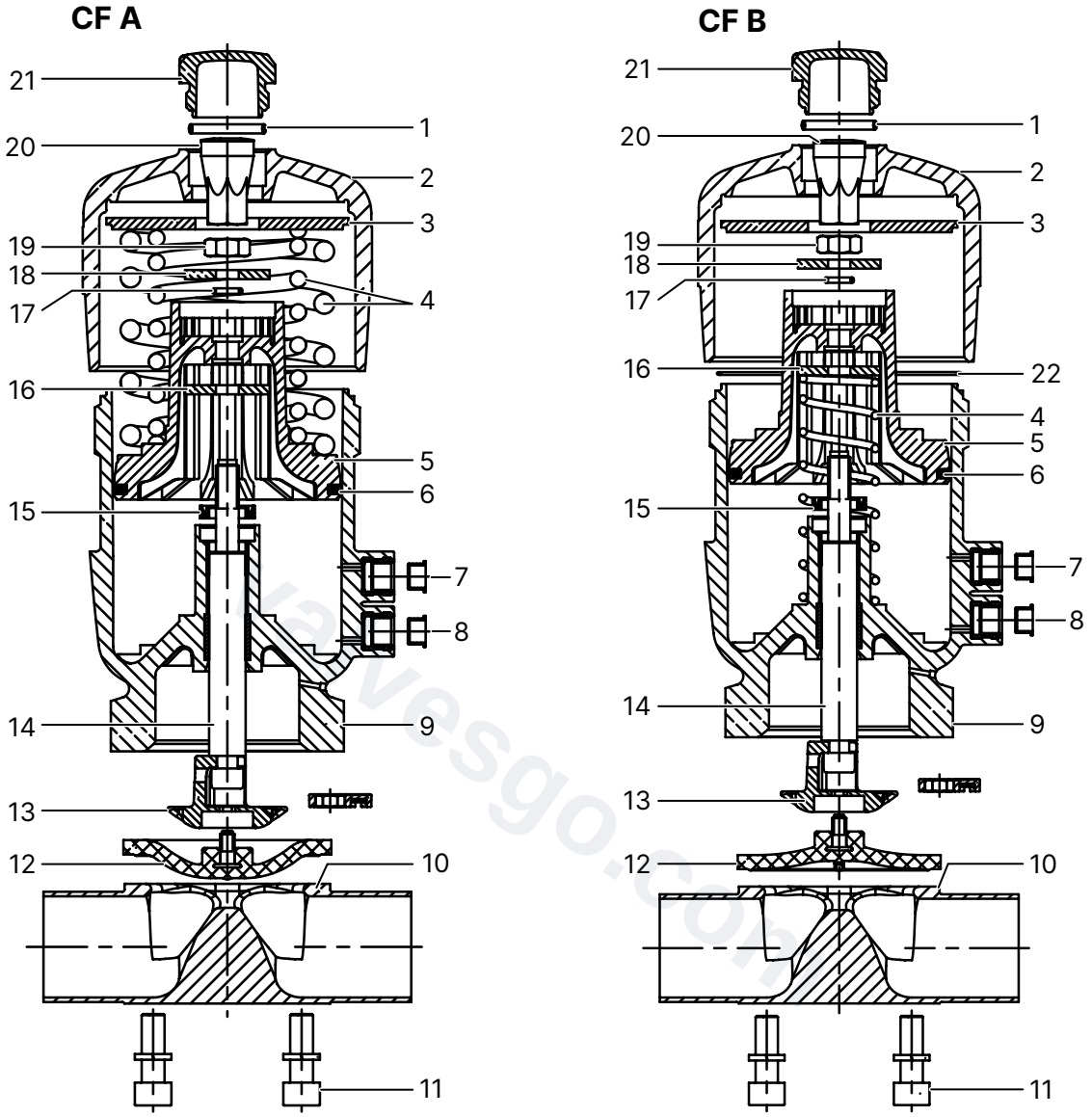

1	O-Ring	2	Actuator cover
3	Washer	4	Compression springs
5	Piston	6	Piston seal
7	Pilot air port above	8	Pilot air port below
9	Actuator housing square	10	Valve body
11	Body screw	12	Diaphragm
13	Compressor	14	Spindle
15	Lip seal	16	Intermediate washer
17	O-Ring	18	Supporting washer
19	Nut	20	Position indicator
21	Transparent cap	22	O-ring

- Clamp the valve body (10) in a holding device (only for valves which have not been installed).

MAN 1000748817 EN Version: - Status: RL (released | freigegeben) printed: 29.07.2026

valvesgo.com

- Pressurise the lower pilot air port (8) with compressed air (value as indicated on the type label): valve opens.
- Loosen the body screws (11) crosswise and remove the actuator and diaphragm from the valve body.
- Switch off the pilot pressure.
- Unbutton or unscrew the diaphragm (12). When fastening with a bayonet catch, loosen the diaphragm by rotating it 90°.
- Clamp the actuator at the square of the actuator housing (9).
- Unscrew the actuator cover (2) using an installation wrench.
- **Only for actuator sizes 100 (G) and 125 (H):** Remove the washer (3).
- Remove the compression springs (4).
- Uninstall the position indicator (20) using an Allen key.
- Remove the nut (19), holding it against the lower end of the spindle (14) with an Allen key or slotted screwdriver.
- Carefully push out the piston (5) and supporting washer (18) upwards from below.
  CAUTION! Do not damage the sealing surface on the actuator housing.
- Remove the intermediate washer (16) and O-ring (17) from the piston (5).
- Lightly coat the actuator housing with OKS 1110-1 silicone grease.
- Insert the compression spring (4).
- Slide the intermediate washer (16) and O-ring (17) onto the spindle (14) as far as it will go.
- Install the piston (5) in the actuator housing with the spring preloaded. To do this, press in the compression spring (4) and piston by hand until the spindle thread protrudes through the hole. Hold this position (use the removed compression spring to push in the piston if necessary).
- Slide the supporting washer (18) over the spindle (14) as far as it will go.
- Apply LOCTITE 274 screw lock to the spindle thread.
- Install the nut (19) and relax the compression spring against the nut.
- Tighten the nut (19), holding it against the lower end of the spindle (14) with an Allen key or slotted screwdriver. Observe the tightening torques for the nut specified in the table below.

Actuator size	Tightening torque [Nm]
40 (C)	3.5
50 (D), 63 (E)	5.0
80 (F)	10.0
100 (G), 125 (H)	20.0

Tab. 21: Tightening torques for the nut

- Install the position indicator (20) using an Allen key. Tightening torque approx. 1.5 Nm.
- **For actuator sizes 100 (G) and 125 (H):** Place the washer (3).
- Insert the O-ring (22) into the groove of the actuator housing.
- Lightly coat the threads of the actuator cover with OKS 1110-1 silicone grease.
- Screw the actuator cover onto the actuator housing using an installation wrench. Observe the tightening torques for the actuator cover specified in the table.

MAN 1000748817 EN Version: - Status: RL (released | freigegeben) printed: 29.07.2026

valvesgo.com

Actuator size	Tightening torque [Nm]
40 (C)	25
50 (D)	35
63 (E)	40
80 (F)	60
100 (G)	80
125 (H)	110

Tab. 22: Tightening torques for the actuator cover

- Install the diaphragm (12) according to the fastening type. The identification tab must be perpendicular to the flow direction.
- Clamp the valve body (10) in a holding device (only for valves which have not been installed).
- Place the actuator together with the diaphragm on the valve body.
- Slightly tighten the body screws (11) crosswise without applying pressure until the diaphragm rests between the valve body and actuator. **Do not fully tighten the screws yet.**
- Actuate the valve twice to position the diaphragm correctly.
- Pressurise the upper pilot air port (7) with compressed air (value as indicated on the type label): valve closes.
- Applying pressure, tighten the body screws (11) in three stages (approx. 1/3, then 2/3 and then full tightening torque, as specified in the following table), in each case crosswise. The diaphragm should be positioned and pressed evenly all around the actuator and valve body.
- Switch off the pilot pressure.

Diaphragm size	Tightening torques [Nm] (tolerance: +10 %)	
	EPDM, FKM	PTFE, advanced PTFE, GYLON®
8	2	2.5
15	3.5	4
20	4	4.5
25	5	6
40	8	10
50	12	15
65	20	30
80	30	40
100	40	50

Tab. 23: Tightening torques for body connection

MAN 1000748817 EN Version: - Status: RL (released | freigegeben) printed: 29.07.2026

valvesgo.com

MAN 1000748817 EN Version: - Status: RL (released | freigegeben) printed: 29.07.2026

10.3.3 Converting control function A to control function I

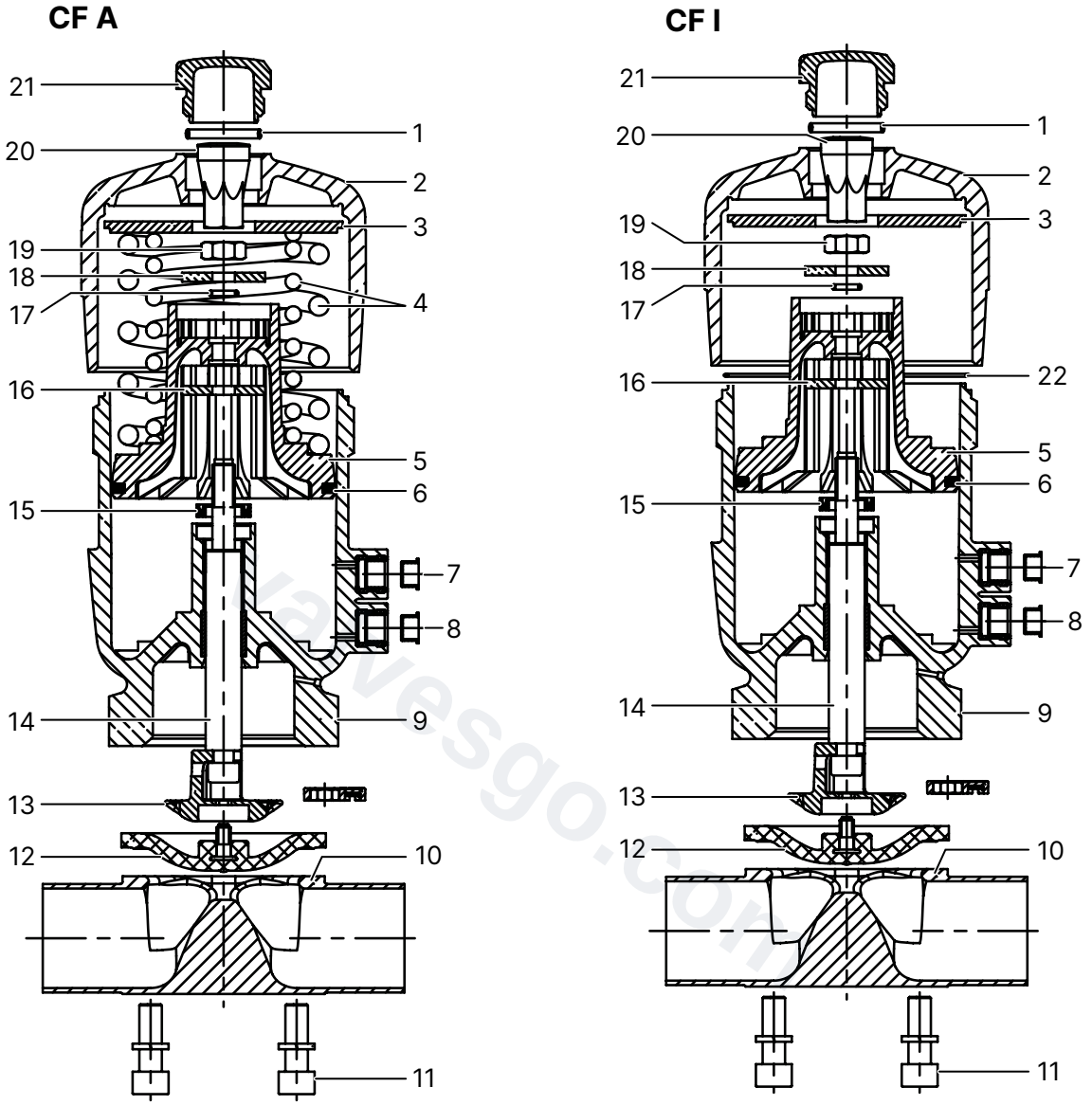

1	O-Ring	2	Actuator cover
3	Washer	4	Compression springs
5	Piston	6	Piston seal
7	Pilot air port above	8	Pilot air port below
9	Actuator housing square	10	Valve body
11	Body screw	12	Diaphragm
13	Compressor	14	Spindle
15	Lip seal	16	Intermediate washer
17	O-Ring	18	Supporting washer
19	Nut	20	Position indicator
21	Transparent cap	22	O-ring

- Clamp the valve body (10) in a holding device (only for valves which have not been installed).

valvesgo.com

- Pressurise the lower pilot air port (8) with compressed air (value as indicated on the type label): valve opens.
- Loosen the body screws (11) crosswise and remove the actuator and diaphragm from the valve body.
- Switch off the pilot pressure.
- Unbutton or unscrew the diaphragm (12). When fastening with a bayonet catch, loosen the diaphragm by rotating it 90°.
- Clamp the actuator at the square of the actuator housing (9).
- Unscrew the actuator cover (2) using an installation wrench.
- **Only for actuator sizes 100 (G) and 125 (H):** Remove the washer (3).
- Remove the compression springs (4).
- Uninstall the position indicator (20) using an Allen key.
- Remove the nut (19), holding it against the lower end of the spindle (14) with an Allen key or slotted screwdriver.
- Carefully push out the piston (5) and supporting washer (18) upwards from below.
  CAUTION! Do not damage the sealing surface on the actuator housing.
- Remove the intermediate washer (16) and O-ring (17) from the piston (5).
- Lightly coat the actuator housing with OKS 1110-1 silicone grease.
- Slide the intermediate washer (16) and O-ring (17) onto the spindle (14) as far as it will go.
- Insert the piston (5) into the actuator housing and slide it over the spindle thread.
- Slide the supporting washer (18) over the spindle (14) as far as it will go.
- Apply LOCTITE 274 screw lock to the spindle thread.
- Tighten the nut (19), holding it against the lower end of the spindle (14) with an Allen key or slotted screwdriver. Observe the tightening torques for the nut specified in the table below.

Actuator size	Tightening torque [Nm]
40 (C)	3.5
50 (D), 63 (E)	5.0
80 (F)	10.0
100 (G), 125 (H)	20.0

Tab. 24: Tightening torques for the nut

- Install the position indicator (20) using an Allen key. Tightening torque approx. 1.5 Nm.
- **For actuator sizes 100 (G) and 125 (H):** Place the washer (3).
- Insert the O-ring (22) into the groove of the actuator housing.
- Lightly coat the threads of the actuator cover with OKS 1110-1 silicone grease.
- Screw the actuator cover onto the actuator housing using an installation wrench. Observe the tightening torques for the actuator cover specified in the table.

MAN 1000748817 EN Version: - Status: RL (released | freigegeben) printed: 29.07.2026

valvesgo.com

Actuator size	Tightening torque [Nm]
40 (C)	25
50 (D)	35
63 (E)	40
80 (F)	60
100 (G)	80
125 (H)	110

Tab. 25: Tightening torques for the actuator cover

- Install the diaphragm (12) according to the fastening type. The identification tab must be perpendicular to the flow direction.
- Clamp the valve body (10) in a holding device (only for valves which have not been installed).
- Place the actuator together with the diaphragm on the valve body.
- Slightly tighten the body screws (11) crosswise without applying pressure until the diaphragm rests between the valve body and actuator. **Do not fully tighten the screws yet.**
- Actuate the valve twice to position the diaphragm correctly.
- Pressurise the upper pilot air port (7) with compressed air (value as indicated on the type label): valve closes.
- Applying pressure, tighten the body screws (11) in three stages (approx. 1/3, then 2/3 and then full tightening torque, as specified in the following table), in each case crosswise. The diaphragm should be positioned and pressed evenly all around the actuator and valve body.
- Switch off the pilot pressure.

Diaphragm size	Tightening torques [Nm] (tolerance: +10 %)	
	EPDM, FKM	PTFE, advanced PTFE, GYLON®
8	2	2.5
15	3.5	4
20	4	4.5
25	5	6
40	8	10
50	12	15
65	20	30
80	30	40
100	40	50

Tab. 26: Tightening torques for body connection

MAN 1000748817 EN Version: - Status: RL (released | freigegeben) printed: 29.07.2026

valvesgo.com

11 Troubleshooting

Service and support

- For further information, technical advice and support, contact Bürkert service .

11.1 Actuator does not switch

Cause	Solution
Pilot air port interchanged.	▸ Connect the pilot air correctly: CF A: Lower pilot air port CF B: Upper pilot air port CF I: Lower pilot air port opens, upper pilot air port closes the valve
Pilot pressure too low.	▸ Observe pressure data on the type label.
Operating pressure too high.	▸ Observe pressure data on the type label.

11.2 Valve is not tight

Cause	Solution
Pilot pressure too low.	▸ Observe pressure data on the type label.
Operating pressure too high.	▸ Observe pressure data on the type label.

11.3 Flow rate reduced

Cause	Solution
Bulging PTFE diaphragm.	▸ Replace the diaphragm.

MAN 1000748817 EN Version: - Status: RL (released | freigegeben) printed: 29.07.2026

valvesgo.com

valvesgo.com

12 Disassembly

Risk of injury or material damage when working on the device or system.

- Read and observe the chapter Safety [▸ 7] before working on the device or system.

DANGER!

Risk of injury from sudden discharge of pressure and escaping medium

Disassembling a pressurised device can cause medium to escape unexpectedly or a sudden discharge of pressure. This can cause serious injuries.

- Before disassembly, shut off the pressure and vent all lines.
- Completely drain the lines.
- During reinstallation, check the tightening torque of the body screws.

- Loosen the pneumatic connection.
- Disassemble the device.

valvesgo.com

MAN 1000748817 EN Version: - Status: RL (released | freigegeben) printed: 29.07.2026

13 Spare parts

Risk of injury and/or damage due to incorrect parts.

- Only use original Bürkert parts.

13.1 Seal set

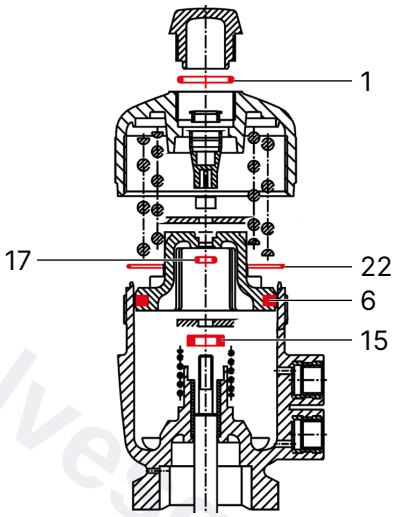

Fig. 21: Seal set components

1	O-Ring	22	O-Ring
6	Piston seal	15	Lip seal
17	O-Ring		

Actuator size	Diaphragm size	Article numbers for seal sets	
		PPS actuator	PA actuator
40 (C)	8	011465	–
50 (D)	15	011477	011426
63 (E)	15, 20	011488	011440
80 (F)	20, 25	011492	011448
100 (G)	32, 40	012127	012125
125 (H)	40, 50, 65	011494	011464
175 (K)	65, 80, 100	–	181802
225 (L)	80, 100	–	186775

Tab. 27: Article numbers for seal sets

MAN 1000748817 EN Version: - Status: RL (released | freigegeben) printed: 29.07.2026

valvesgo.com

13.2 Diaphragm

Depending on the valve type, not all of the listed diaphragm sizes are available. The sizes specified for the respective diaphragm valve are decisive.

The diaphragms are labelled with a material code that specifies it. The material code is located on the identification tab or, in the case of two-part diaphragms, on the tab of the backing diaphragm and the diaphragm shield. The material code may differ for older materials.

Diaphragm size	EPDM (AD[9])		FKM (FF[9])	
	Order number	Material code	Order number	Material code
6	20130838	EPDM E04	–	–
8	688421	EPDM E04	677684	FKM F01
15	688422	EPDM E04	677685	FKM F01
15 BC[10]	693163	EPDM E04	693164	FKM F01
20	688423	EPDM E04	677686	FKM F01
20 BC[10]	693166	EPDM E04	693167	FKM F01
25	688424	EPDM E04	677687	FKM F01
32	688425	EPDM E04	677688	FKM F01
40	688426	EPDM E04	677689	FKM F01
50	688427	EPDM E04	677690	FKM F01
65	688428	EPDM E04	677691	FKM F01
80	688429	EPDM E04	677692	FKM F01
100	688430	EPDM E04	677693	FKM F01

Tab. 28: Order numbers for EPDM and FKM diaphragms

9) SAP code

10) Marking on the diaphragm

MAN 1000748817 EN Version: - Status: RL (released | freigegeben) printed: 29.07.2026

valvesgo.com

Diaphragm size	PTFE/EPDM (EA[9)])		Advanced PTFE/EPDM (EU[9)])	
	Order number	Material code	Order number	Material code
6	–	–	–	–
8	20093068	PTFE L11	20093078	PTFE L12
15	20093069	EPDM E04/ PTFE P05	20093079	EPDM E04/ PTFE P06
20	20093070	EPDM E04/ PTFE P05	20093080	EPDM E04/ PTFE P06
25	20093071	EPDM E04/ PTFE P05	20093082	EPDM E04/ PTFE P06
32	20093072	EPDM E04/ PTFE P05	20093083	EPDM E04/ PTFE P06
40	20093073	EPDM E04/ PTFE P05	20093084	EPDM E04/ PTFE P06
50	20093074	EPDM E04/ PTFE P05	20093087	EPDM E04/ PTFE P06
65	20093075	EPDM E04/ PTFE P05	20093088	EPDM E04/ PTFE P06
80	20093076	EPDM E04/ PTFE P05	20093091	EPDM E04/ PTFE P06
100	20093077	EPDM E04/ PTFE P05	20093092	EPDM E04/ PTFE P06

Tab. 29: Order numbers for PTFE and advanced PTFE diaphragms

Diaphragm size	Laminate made from Gylon® and EPDM (ER[9)])	
	Order number	Material code
6	20130839	PTFE L08
8	693175	PTFE L08
15	693176	PTFE L08
20	693177	PTFE L08
25	693178	PTFE L08
32	693179	PTFE L08
40	693180	PTFE L08
50	693181	PTFE L08
65	586616	PTFE L08
80	586617	PTFE L08
100	-	–

Tab. 30: Article numbers for GYLON® diaphragms

MAN 1000748817 EN Version: - Status: RL (released | freigegeben) printed: 29.07.2026

valvesgo.com

14 Conversion kit

Risk of injury and/or damage due to incorrect parts.

- Only use original Bürkert parts.

Conversion from CF A to CF B

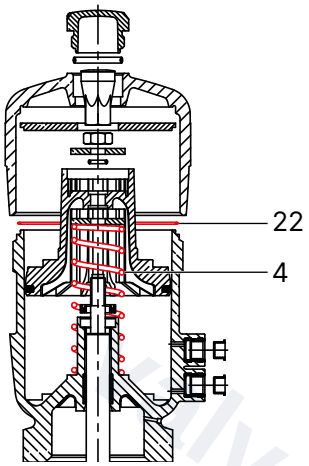

Conversion from CF A to CF I

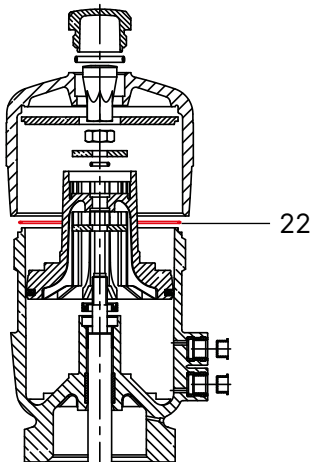

Fig. 22: Conversion kit components

22	O-Ring	4	Compression spring

Actuator size	Article number	
	CF A to CF B	CF A to CF I
40 (C)[11]	011678	001948
50 (D)	011681	011744
63 (E)	011685	011766
80 (F)	011689	011767
100 (G)	011710	011795
125 (H)	011715	011813

Tab. 31: Article numbers for conversion kits

[11] Combined with diaphragm size 8

MAN 1000748817 EN Version: - Status: RL (released | freigegeben) printed: 29.07.2026

valvesgo.com

15 Accessories

Risk of injury and/or damage due to incorrect parts.

- Only use original Bürkert accessories.

15.1 Installation wrench for actuator cover

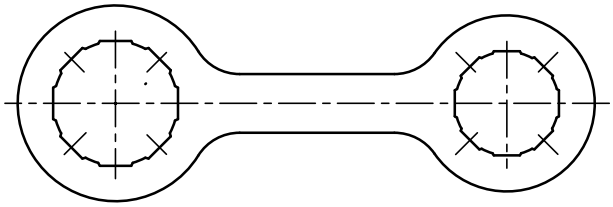

Actuator size	Ø [mm]	Article number
40 (C)	40	639175
50 (D)	50	639175

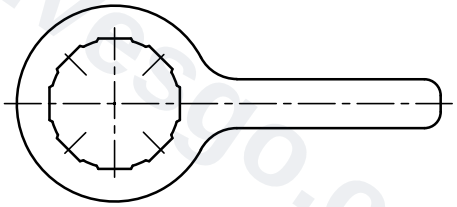

Actuator size	Ø [mm]	Article number
63 (E)	63	639170

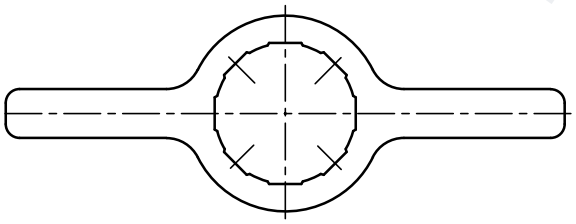

Actuator size	Ø [mm]	Article number
80 (F)	80	639171
100 (G)	100	639172
125 (H)	125	639173

MAN 1000748817 EN Version: - Status: RL (released | freigegeben) printed: 29.07.2026

valvesgo.com

15.2 Additional Information

An overview of the available accessories for pneumatic actuators is included in the data sheet Type 2XXX. Information on variants, possible applications and order data is listed there.

MAN 1000748817 EN Version: - Status: RL (released | freigegeben) printed: 29.07.2026

valvesgo.com

16 Logistics

16.1 Transport and storage

- Protect the device against moisture and dirt in the original packaging during transportation and storage.
- Avoid UV radiation and direct sunlight.
- Protect connections, if present, from damage with protective caps.
- Observe the permitted storage temperature.
- If the device is to be stored for a long time, loosen the body screws to avoid permanent deformation of the diaphragms due to a lack of medium pressure.
- Mark loosened screws clearly for safety reasons.

Observe the instructions in chapter Storage of elastomer parts [▸ 73].

DANGER!

Risk of injury due to escaping medium

Loosened body screws can cause medium (acid, alkali, hot media) to leak and lead to burns, including chemical burns.

- Before reinstallation, check the tightening torque of the body screws.

16.2 Return

No work or tests will be carried out on the device until a valid Contamination Declaration has been received.

- Before returning a used device, log in to a Bürkert account and create a return request via My Services.
  Register an account before creating the request, if necessary. A return number is required for all used devices.
- Complete the Contamination Declaration and include it with the return shipment.
- Reinstall all original protective caps and plugs before shipping. This helps protect the device against contamination and transport damage.
- Pack the device securely and clearly indicate the return number on the shipment.

16.3 Disposal

Environmentally friendly disposal

- Follow national regulations regarding disposal and the environment.
- Collect electrical and electronic devices separately and dispose of them as special waste.

Further information at country.burkert.com

MAN 1000748817 EN Version: - Status: RL (released | freigegeben) printed: 29.07.2026

valvesgo.com

17 Appendix

17.1 Storage of elastomer parts

Elastomer parts could lose their eponymous features as storage time progresses. These changes happen based on various influencing factors such as light, heat, ozone, humidity, deformation, oxygen, oils and solvents. International standards such as DIN 7716 or ISO 2230 Basic illustrate basic instructions for correct storage.

The below mentioned information regarding storage time, under optimum conditions, are based on the above mentioned guidelines and on our experience. In principle, they should be considered when maintaining their physical and chemical properties. Correct storage is an important factor in the operating life of elastomers especially for highly stressed components (e.g. diaphragms).

- Optimal storage temperature is between + 5°C and + 25°C. The parts shouldn't be stored next to a heating element.
- Relative air humidity should be less than 65% with condensation avoided at all times.
- Parts should be stored away from all direct sunlight and artificial light with a high UV, as this will speed up the ageing process.
- All parts should be also stored in an airtight container to protect them from circulating air and other environmental influences such as Ozone for example.
- Ozone generating devices, such as electric motors, should also not be operated within storage areas.
- Elastomer parts are best stored in a relaxed and non deforming condition.
- Contact to solvents, oils, fats and other chemicals should be avoided at all times.
- No contact with rubber products of varying composition especially of varying colors.
- No contact with parts made of cooper, manganese or alloys of these metals.

Based on the above, the following is the expected life cycle for diaphragms.

Raw Material	Storage Period (max.)	Operating Time (max.)
EPDM	7 years	3 years
FKM	7 years	4 years
PTFE or advanced PTFE	10 years	3 years[12)]

[12)] Regarding PTFE diaphragm variants, the stated times of the elastomer material are crucial.

MAN 1000748817 EN Version: - Status: RL (released | freigegeben) printed: 29.07.2026

valvesgo.com