bürkert
FLUID CONTROL SYSTEMS

Type 3280, 3285

Electromotive operated proportional valve
Elektromotorisch betätigtes Proportionalventil
Vanne proportionnelle électromotrisé

valvesgo

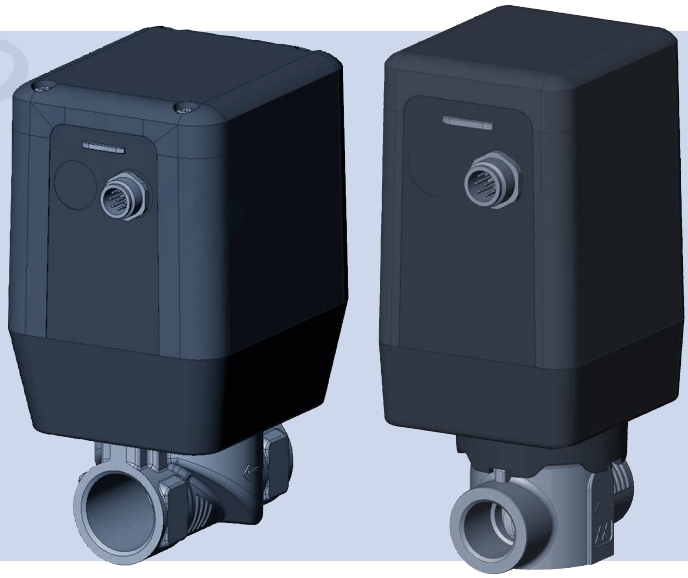

MAN 1000258956 EN Version: L Status: RL (released | freigegeben) printed: 13.10.2026

Operating Instructions

valvesgo.com

MAN 1000258956 EN Version: L Status: RL (released | freigegeben) printed: 13.10.2026

valvesgo.com

We reserve the right to make technical changes without notice.
Technische Änderungen vorbehalten.
Sous réserve de modifications techniques.

© 2015-2026 Bürkert Werke GmbH & Co. KG

Operating Instructions 2606/12_EU-ML_00810387 / Original DE

Contents

1 OPERATING INSTRUCTIONS 6

1.1 Symbols 6

1.2 Definition of terms 6

2 AUTHORIZED USE 7

3 BASIC SAFETY INSTRUCTIONS 8

4 GENERAL INFORMATION 9

4.1 Contact address 9

4.2 Warranty 9

4.3 Information on the Internet 9

5 PRODUCT DESCRIPTION 10

5.1 Intended use 10

5.2 Properties 10

5.3 Structure and function 11

5.3.1 Electromotive seat valve Type 3280 11

5.3.2 Electromotive disk valve Type 3285 11

5.4 Device versions 12

5.4.1 Electric control 12

6 TECHNICAL DATA 15

6.1 Standards and directives 15

6.2 Operating conditions 15

6.3 Type label 15

6.4 Mechanical data 16

6.5 Electrical data 17

6.5.1 Derating 19

6.6 Fluidic data 20

MAN 1000258956 EN Version: L Status: RL (released | freigegeben) printed: 13.10.2026

valvesgo.com

7 INSTALLATION 21
7.1 Installing device fluidically 21
7.1.1 Installation area for cartridge body 22
7.1.2 Installation of the proportional valve with cartridge body 24
7.2 Installing device electrically 25
7.2.1 Pin assignment for the on-off valve, circular connector M12, 8-pole 26
7.2.2 Pin assignment for the control valve, circular connector M12, 8-pole 26
7.2.3 Pin assignment for the positioner 27
7.2.4 Pin assignment for process controller 28
7.3 DIP switch settings (analog version only) 29
7.3.1 Opening the actuator cover 30
7.3.2 Setting the DIP switch 31
7.3.3 Closing the actuator cover 33
7.4 Accepting and saving SIM card data (digital version only) 34
7.5 LED display 35
7.5.1 Display elements standard 35
7.5.2 Display elements NAMUR NE 107 36
8 START-UP 37
8.1 Functions of the standard device 37
8.2 Functions of the positioner and process controller version 38
8.3 Setting options 40
8.3.1 Setting options for running positioner and process controller 40
8.3.2 Setting options for running process controller 44
8.3.3 Other settings 46
8.4 Configuration management 46
9 MAINTENANCE, TROUBLESHOOTING 47
9.1 Maintenance 47
9.2 Cleaning 47
9.3 Troubleshooting 47

MAN 1000258956 EN Version: L Status: RL (released | freigegeben) printed: 13.10.2026

valvesgo.com

10 SPARE PARTS 49

10.1 Accessories 49

11 PACKAGING AND TRANSPORT 50

12 STORAGE 50

13 ENVIRONMENTALLY FRIENDLY DISPOSAL 50

MAN 1000258956 EN Version: L Status: RL (released | freigegeben) printed: 13.10.2026

valvesgo.com

valvesgo.com

1 OPERATING INSTRUCTIONS

The operating instructions describe the entire life cycle of the device. Keep these instructions in a location which is easily accessible to every user, and make these instructions available to every new owner of the device.

Important safety information.

- Read the operating instructions carefully and thoroughly.
- Study in particular the chapters entitled "Basic safety instructions" and "Authorized use".
- The operating instructions must be read and understood.

1.1 Symbols

DANGER!

Warns of an immediate danger.

- Failure to observe the warning may result in a fatal or serious injury.

WARNING!

Warns of a potentially dangerous situation.

- Failure to observe the warning may result in serious injuries or death.

CAUTION!

Warns of a possible danger.

- Failure to observe this warning may result in a moderate or minor injury.

NOTE!

Warns of damage to property.

- Failure to observe the warning may result in damage to the device or the equipment.

Indicates important additional information, tips and recommendations.

Refers to information in these operating instructions or in other documentation.

- designates instructions for risk prevention.

→ Designates a procedure which you must carry out.

1.2 Definition of terms

In these instructions the term "device" always refers to the electromotive operated proportional valve Type 3280 and 3285.

MAN 1000258956 EN Version: L Status: RL (released | freigegeben) printed: 13.10.2026

valvesgo.com

2 AUTHORIZED USE

The electromotive operated proportional valve Type 3280 and 3285 is designed to control the flow of liquid and gaseous media.

- Use the device only as intended. Non-intended use of the device may be dangerous to people, nearby equipment and the environment.
- Do not use the device outdoors and keep it away from heat sources that could cause the permissible temperature range to be exceeded.
- Protect the device from direct sunlight and humidity.
- To use the device, observe the permissible data, operating conditions and conditions of use. These specifications can be found in the contract documents, the operating instructions and on the Type label.
- Use the device only in conjunction with third-party devices and components recommended or approved by Bürkert.
- The device must only be used in perfect working order; always ensure proper storage, transportation, installation and operation.

valvesgo.com

MAN 1000258956 EN Version: L Status: RL (released | freigegeben) printed: 13.10.2026

valvesgo.com

3 BASIC SAFETY INSTRUCTIONS

These safety instructions do not take into account any unforeseen circumstances and events which occur during installation, operation and maintenance. The operator is responsible for observing the location-specific safety regulations, also with reference to personnel.

Risk of injury from high pressure.

- Before loosening lines and valves, cut off the pressure and deaerate or drain lines.

Risk of injury due to electrical shock.

- Before working on the system or device, switch off and isolate the power supply to prevent reactivation of the device.
- Observe applicable accident prevention and safety regulations for electrical equipment.

Risk of burns or risk of fire if used for a prolonged duty cycle through hot device surface.

- Keep the device away from highly flammable substances and medium and do not touch with bare hands.

General hazardous situations.

To prevent injuries:

- Do not use Type 3280 and 3285 in potentially explosive areas.
- Do not subject the actuator housing and actuator cover to mechanical loading.
- Do not make any internal or external modifications on the device. Do not paint housing parts or screws.
- Avoid using the proportional valve in the vicinity of strong magnetic fields.
- Secure the device from unintentional actuation.
- Only trained technicians may perform installation and maintenance work.
- After an interruption in the power supply, ensure that the process is restarted in a defined or controlled manner.
- Observe the general rules of technology.

NOTE!

Electrostatic sensitive components and modules!

The device contains electronic components which react sensitively to electrostatic discharge (ESD). Contact with electrostatically charged persons or objects are hazardous to these components. In the worst case scenario, they will be destroyed immediately or will fail when energized.

- Observe the requirements in accordance with EN 61340-5-1 to minimize or avoid the possibility of damage caused by sudden electrostatic discharge!
- Do not touch electronic components while the supply voltage is switched on!

MAN 1000258956 EN Version: L Status: RL (released | freigegeben) printed: 13.10.2026

valvesgo.com

4 GENERAL INFORMATION

4.1 Contact address

Germany

Bürkert Fluid Control Systems
Sales Center
Christian-Bürkert-Str. 13-17
D-74653 Ingelfingen
Tel. + 49 (0) 7940 - 10 91 111
Fax + 49 (0) 7940 - 10 91 448
E-mail: info@burkert.com

International

You can find information on the Internet under:

www.burkert.com

4.2 Warranty

The warranty is only valid if the proportional valve Type 3280 and 3285 is used correctly in accordance with the specified operating conditions.

4.3 Information on the Internet

The operating instructions and data sheets for Types 3280 and 3285 can be found on the Internet at:

www.burkert.com

MAN 1000258956 EN Version: L Status: RL (released | freigegeben) printed: 13.10.2026

valvesgo.com

valvesgo.com

5 PRODUCT DESCRIPTION

5.1 Intended use

The proportional valve Type 3280 and 3285 is designed for controlling the flow rate of liquid and gaseous media. Only clean, liquid or gaseous medium, which does not react with the bodies and sealing materials, may be controlled.

NOTE!

Unsuitable medium will damage the body and the seals.

Unsuitable medium may damage the body and the seals.

▸ Use suitable medium only.

▸ Check chemical compatibility in individual cases.

5.2 Properties

The regulation of the flow or switching of the valve is regulated with the aid of a stepper motor actuator which is controlled by the integrated electronic control system. Therefore, no external motor control is required for step control.

Basic functions of the control electronics:

- Control of the valve opening by processing the external set-point values
- Output of the valve states via the LED display
- Position detection after power failure
  - if power fails, the current position of the valve is retained
  - when power is restored, the internal control electronics automatically detects it's current position
- Reduction in the energy consumption
  - The valve is designed to hold its position without the active use of the motor. As soon as the desired position is achieved, motor is turned off and the valve uses only fraction of power required to move the valve.

MAN 1000258956 EN Version: L Status: RL (released | freigegeben) printed: 13.10.2026

valvesgo.com

5.3 Structure and function

5.3.1 Electromotive seat valve Type 3280

The valve spindle is driven by a stepper motor. The angular movement of the motor is converted to translational movement with the aid of a threaded spindle. The valve spindle is connected rigidly to the threaded spindle. The valve spindle is connected to a control cone.

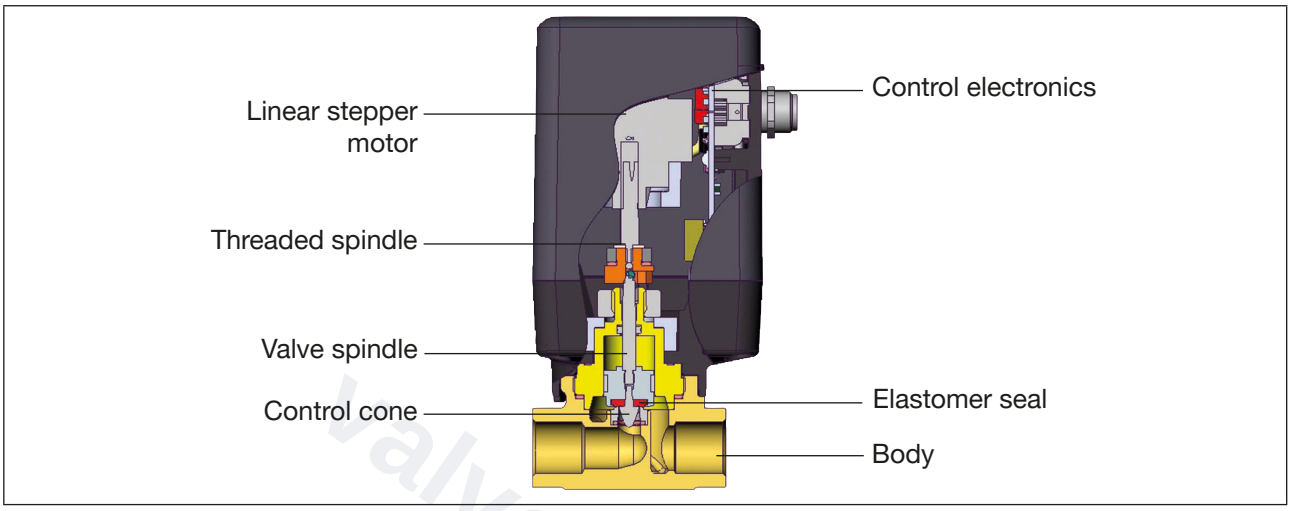

Fig. 1: Electromotive seat valve Type 3280

5.3.2 Electromotive disk valve Type 3285

The disk valve consists of a stepper motor with gearbox which transfers the rotational torque to the actuator shaft via coupling. The actuator shaft has control/shut-off disc attached to it. A fixed disk with a mouth attached to the body is used as a valve seat. Control/shut-off disc is pressed onto the fixed disk by a supporting spring. The actuator turns the control/shut-off disc about 180° above the fixes disc and opens or closes the valve seat.

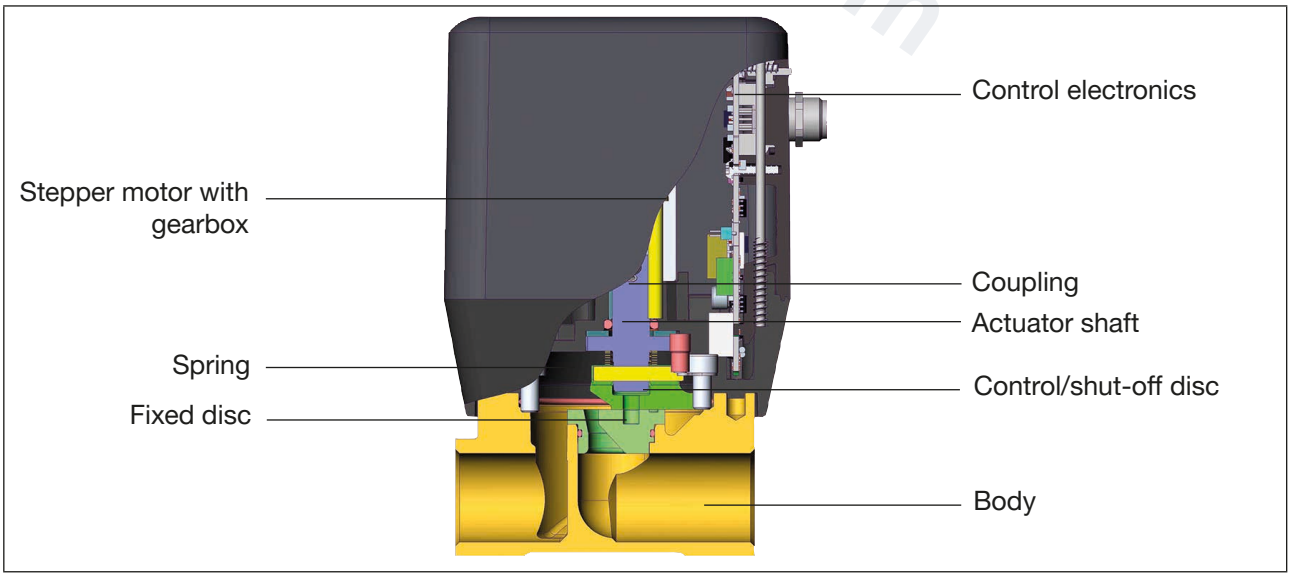

Fig. 2: Electromotive disk valve Type 3285

MAN 1000258956 EN Version: L Status: RL (released | freigegeben) printed: 13.10.2026

valvesgo.com

5.4 Device versions

Type	Descriptions	Seat diameter	Version	
3280	Electromotive 2-way seat valve	1, 1.5, 2, 3, 4, 5, 6, 8, 10	Standard:	• On-Off • Control valve
3285	Electromotive 2-way disc valve	8, 10, 12, 15, 20, 25	Positioner:	• Analog • Digital (Fieldbus)
			Process controller:	• Analog • Digital (Fieldbus)

There are 2 versions of the positioner and the process controller:
- Analog: Set-point values are transmitted in analog mode via the standard signals,
- Digital: Set-point values are transmitted in digital mode via CANopen/büS.
The versions can be identified on the connector diagram. For this, see chapter “7.2”.

5.4.1 Electric control

The proportional valves 3280 and 3285 feature an electromotive actuator with an electric control.

The device version is stated on the type label: G means on-off, 0 resp. H means control valve, C means positioner and D stands for process controller.

Standard device:

- On-Off: By processing the external set-point values the valve is switching.
- Control valve: The device converts a external standard signal, set-point position to a valve position.

Both valve end positions are indicated by the LED status. Additionally, the digital output indicates when the closed valve position has been achieved.

Positioner:

The position controller version converts a set-point position to a valve position. The position of the actuator is controlled according to the position set-point value. The current position *(POS)* of the electromotive valve is recorded by the position measuring system. The position controller compares this position actual value to the set-point value *(CMD)* specified as the standard signal. In case of a control difference (Xd1), the motor control signal is sent to the actuating drive as the actuating variable. Z1 is a disturbance value.

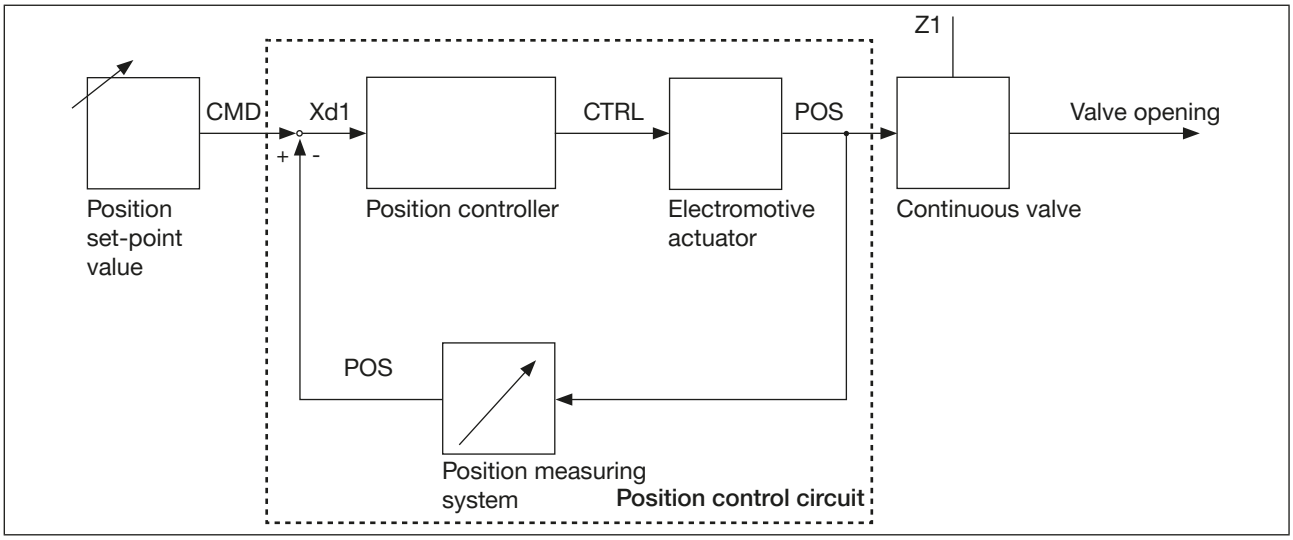

Fig. 3: Signal flow diagram position controller

MAN 1000258956 EN Version: L Status: RL (released | freigegeben) printed: 13.10.2026
valvesgo.com

Both valve end positions are indicated by the LED status. Moreover, the position actual value recorded using the position measuring system is output via the M12 circular plug-in connector.

It is possible to communicate with the device digitally via CANopen* or büS**.

* CANopen - A CAN-based fieldbus (Controller Area Network) used in automation technology to link devices.

** büS - A CANopen-based fieldbus with additional functions.

The positioner version also features some special functions (see chapter "8.3.1"), which can be set up using the Bürkert Communicator.

The operating instructions for the Bürkert Communicator can be found at www.burkert.com

Process controller:

The additionally implemented PID controller can perform not only the actual position control but also a process control in the sense of a cascade control.

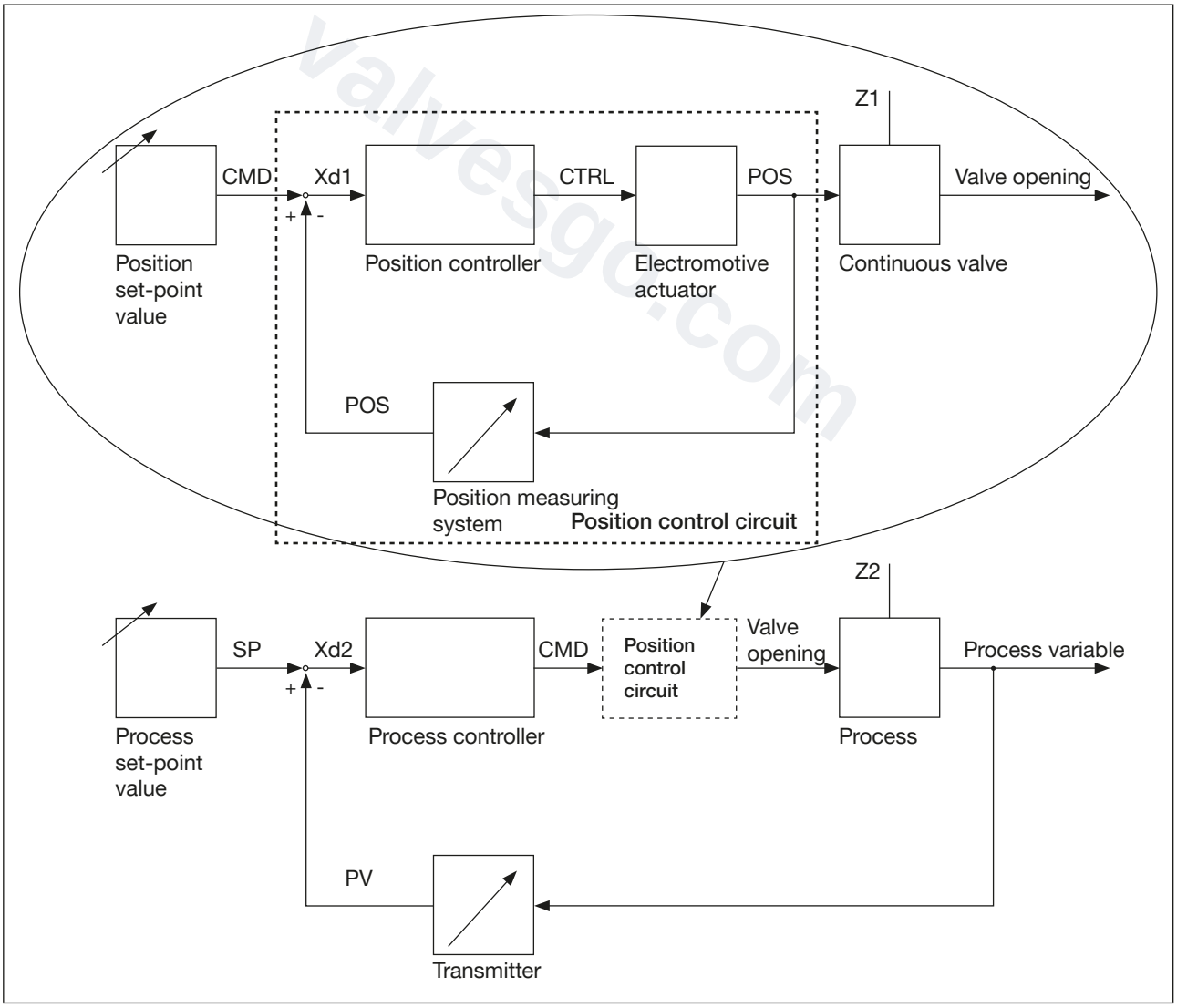

Fig. 4: Signal flow diagram process controller

MAN 1000258956 EN Version: L Status: RL (released | freigegeben) printed: 13.10.2026

valvesgo.com

The process controller is integrated in a control circuit. The position set-point value of the valve is calculated from the process set-point value and the process actual value using the control parameters (PID controller). The process set-point value can be specified by an external signal.

During the process control the position control mentioned above becomes the subordinate auxiliary control circuit; this results in a cascade control. The process controller in the main control circuit has a PID function. The process set-point value (SP) is specified as a set-point value and is compared with the actual value (PV) of the process variable to be controlled. The position measuring system records the current position (POS) of the electromotive linear actuator. This position actual value is compared by the position controller with the set-point value (CMD) specified by the process controller. If there is a control difference (Xd1), the actual position (POS) and therefore the valve opening are changed by the control variable (CTRL). Z2 represents a disturbance variable.

It is possible to communicate with the device digitally via CANopen* or büS**.

* CANopen - A CAN-based fieldbus (Controller Area Network) used in automation technology to link devices.

** büS - A CANopen-based fieldbus with additional functions.

The positioner version also features some special functions (see chapter “8.3.1”), which can be set up using the Bürkert-Communicator.

The operating instructions for the Bürkert-Communicator can be found at www.burkert.com

MAN 1000258956 EN Version: L Status: RL (released | freigegeben) printed: 13.10.2026

valvesgo.com

valvesgo.com

6 TECHNICAL DATA

6.1 Standards and directives

The device complies with the valid EU harmonisation legislation. In addition, the device also complies with the requirements of the laws of the United Kingdom.
The harmonised standards that have been applied for the conformity assessment procedure are listed in the current version of the EU Declaration of Conformity/ UK Declaration of Conformity.

6.2 Operating conditions

Ambient temperature	-10...+60 °C (observe derating curve, see chapter "6.5.1") -10...+50 °C Type 3280, Seat diameter 8...10, positioner and process controller restricted
Medium temperature	0...+70 °C
Medium temperature for oxygen	0...+60 °C
Air humidity	< 95 %, non-condensing
Medium	non-aggressive, clean and non-corrosive liquid and gaseous medium which do not attack the bodies and sealing materials. Check resistance in individual cases (see chemical resistance chart at www.burkert.com). If medium is contaminated or contain particals, connect a suitable dirt filter upstream.
Control functions	Depending on the version, the seat of the valve is closed with or against the medium flow: Type 3280: flow direction under seat Type 3285: flow direction over seat

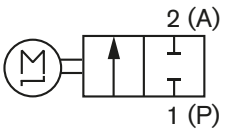

2-way valve for continuous control of the flow rate in output A, motorized, without power motionless

6.3 Type label

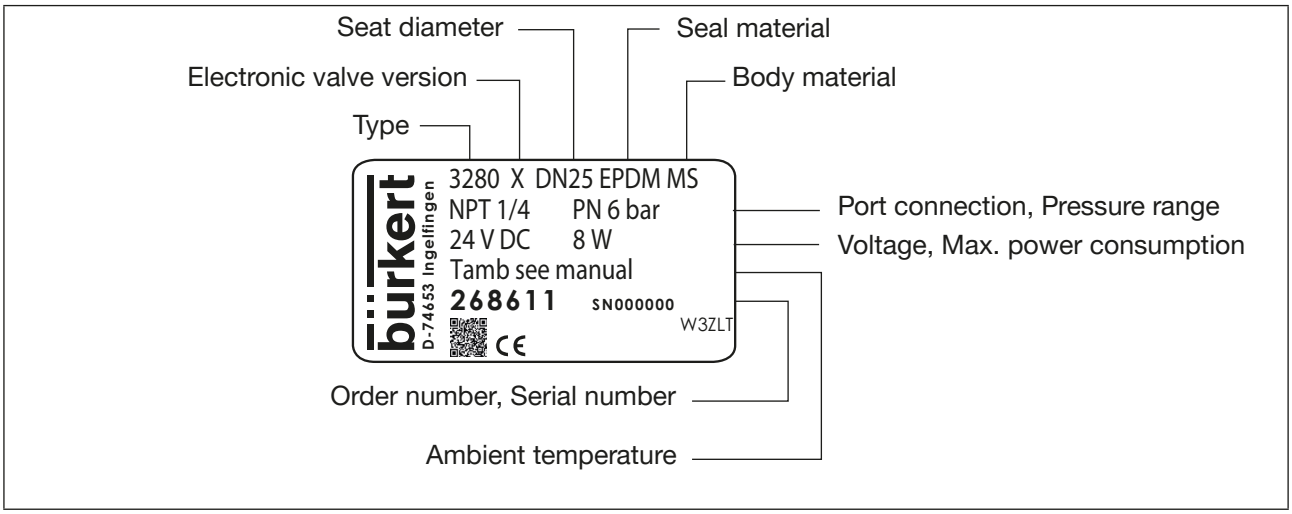

Fig. 5: Description of the type label (Example)

MAN 1000258956 EN Version: L Status: RL (released | freigegeben) printed: 13.10.2026

valvesgo.com

6.4 Mechanical data

Materials	Type 3280	Type 3285
Actuator housing	Black Plastic parts: PPS GF40, Anthracite Plastic parts: PC GF10	Black Plastic parts: PPS GF40, Anthracite Plastic parts: PC GF10, in contact with medium: PPS GF40
Body	Brass (MS) or stainless steel (VA)	Brass (MS) or stainless steel (VA)
Sealing material	FKM, NBR or EPDM[1)]	FKM, NBR or EPDM, technical ceramic
Other materials in the fluid area	Stainless steel (VA)	Stainless steel (VA)

1) *For seat sizes 1 and 1.5, the seat seal is made of PEEK*

Connections

Type 3280	G 1/4, G 3/8, G 1/2, NPT 1/4, NPT 3/8, NPT 1/2 and Cartridge
Type 3285	G 1/2, G 3/4, G 1, NPT 1/2, NPT 3/4, NPT 1, RC 1/2, RC 3/4 or RC 1

Weight

Type 3280	~ 0.7 kg (with VA body)
Type 3285	Seat diameter 8/10 ~ 0.8 kg (with VA body) Seat diameter 12/15 ~ 1.2 kg (with VA body) Seat diameter 20/25 ~ 1.5 kg (with VA body)
Dimensions	see data sheet

MAN 1000258956 EN Version: L Status: RL (released | freigegeben) printed: 13.10.2026

valvesgo.com

valvesgo.com

6.5 Electrical data

Electrical data	Standard		Positioner		Process controller	
	On-Off	Control valve	Analog	Digital (Fieldbus)	Analog	Digital (Fieldbus)
Connections	circular plug-in connector (M12 x 1, 8-pole)		circular plug-in connector (M12 x 1, 8-pole)	circular plug-in connector (M12 x 1, 5-pole)	circular plug-in connector (M12 x 1, 8-pole and M12 x 1, 5-pole)	circular plug-in connector (M12 x 1, 5-pole and M12 x 1, 5-pole)
Operating voltage	24 V DC ±10 % - residual ripple < 10 %		24 V DC ±10 % - residual ripple < 10 %		24 V DC ±10 % - residual ripple < 10 %	
Power consumption	Type 3280: max. 8 W, for seat diameter 8...10 and higher pressures max. 12 W		Type 3280: max. 8 W, for seat diameter 8...10 and higher pressures max. 12 W		Type 3280: max. 8 W, for seat diameter 8...10 and higher pressures max. 12 W	
	Type 3285: max. 12 W		Type 3285: max. 12 W		Type 3285: max. 12 W	
Standby power consumption	approx. 1 W		approx. 2 W		approx. 2 W	
Actuating time (0...100 %)	Type 3280: approx. 2.5 s, for setting “Valve actuating speed normal”, see chapter “7.3”		Type 3280: approx. 2.5 s, for setting “Valve actuating speed normal”, see chapter “8.3”		Type 3280: approx. 2.5 s, for setting “Valve actuating speed normal”, see chapter “8.3”	
	Type 3285: approx. 4 s, for setting “Valve actuating speed normal”, see chapter “7.3”		Type 3285: approx. 4 s, for setting “Valve actuating speed normal”, see chapter “8.3”		Type 3285: approx. 4 s, for setting “Valve actuating speed normal”, see chapter “8.3”	
Analog input (Set-point value input)	-	4...20 mA or 0...10 V (adjustable, see chapter “7.3”) or PWM-signal (800 Hz)	0...20 mA, 4...20 mA, 0...5 V or 0...10 V, see chapter “8.3” or PWM-signal (800 Hz)	-	0...20 mA, 4...20 mA, 0...5 V or 0...10 V, see chapter “8.3” or PWM-signal (800 Hz)	-
Digital input (set-point value input)	0...5 V = log“0“, 10...30 V = log „1“	-	-	-	-	-
Analog input (actual value input)	-	-	-	-	0...20 mA, 4...20 mA, 0...5 V or 0...10 V, see chapter „8.2.1“	0...20 mA, 4...20 mA, 0...5 V, 0...10 V or Frequency: Measuring range 5...2000 Hz Input resistance > 22 kΩ Input signal > 10 Vss Square waveform

MAN 1000258956 EN Version: L Status: RL (released | freigegeben) printed: 13.10.2026

valvesgo.com

Electrical data	Standard		Positioner		Process controller	
	On-Off	Control valve	Analog	Digital (Fieldbus)	Analog	Digital (Fieldbus)
Input impedance for analog input	-	60 Ω at 4...20 mA / resolution 40 µA 22 kΩ at 0...10 V / resolution 20 mV	60 Ω at 0...20 mA and 4...20 mA / resolution 40 µA 22 kΩ at 0...5 V and 0...10 V / resolution 20 mV	-	60 Ω at 0...20 mA and 4...20 mA / resolution 40 µA 22 kΩ at 0...5 V and 0...10 V / resolution 20 mV	-
Analog output (actual value output)	-	-	0...20 mA, 4...20 mA, 0...5 V, 0...10 V (adjustable, see chapter "8.3")	-	0...20 mA, 4...20 mA, 0...5 V, 0...10 V (adjustable, see chapter "8.3")	-
Analog output	-	-	max. current for voltage output 10 mA max. load for current output 560 Ω	-	max. current for voltage output 10 mA max. load for current output 560 Ω	-
Digital output	active, max. 100 mA current limitation, PNP, switching voltage = U_{supply}-1 V short-circuit proof		-	-	-	-
Limit switch	contactless end position detection		-	-	-	-
Position measuring system	-		non-contact, high resolution, and thus wear-free position measuring system		non-contact, high resolution, and thus wear-free position measuring system	
Parameterization interface	-		büS or CANopen[2)]	-	büS or CANopen[2)]	-
Communications interface	-		-	CANopen/büS	-	CANopen/büS
Duty cycle	as per EN 60034-1: S3 50 %, depending on the operating conditions. Observe derating curve, see chapter "6.5.1"		as per EN 60034-1: S3 50 %, depending on the operating conditions. Observe derating curve, see chapter "6.5.1"		as per EN 60034-1: S3 50 %, depending on the operating conditions. Observe derating curve, see chapter "6.5.1"	

2) *Analog version: 3.3 V signal voltage, reliable communication is reduced as the line length and transmission rate increase.*

MAN 1000258956 EN Version: L Status: RL (released | freigegeben) printed: 13.10.2026

valvesgo.com

6.5.1 Derating

The maximum duty cycle of the valve depends on the maximum ambient temperatures and the current required by the stepper motor.

The duty cycle does not refer to the duty cycle of the device but to the duty cycle of the motor. This is not switched on unless the valve is to move. Frequent set-point value changes will drastically increase the duty cycle of the motor.

The derating curve can be used to indicate the maximum duty cycle permissible at the corresponding ambient temperature. A lower duty cycle must be selected for high medium temperatures. By switching on the low power function a higher duty cycle can be achieved (Warning: during low power function, max medium pressure is reduced; if violated Valve will not move or malfunction).

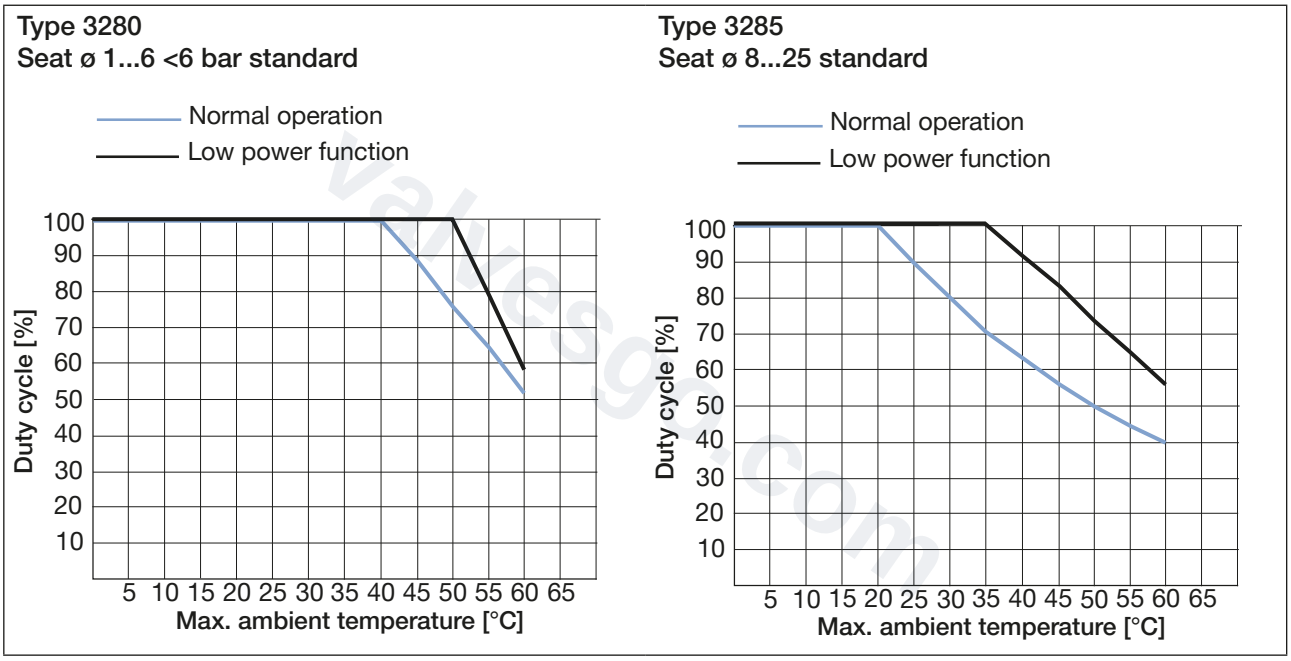

Fig. 6: Derating curve for standard device

MAN 1000258956 EN Version: L Status: RL (released | freigegeben) printed: 13.10.2026

valvesgo.com

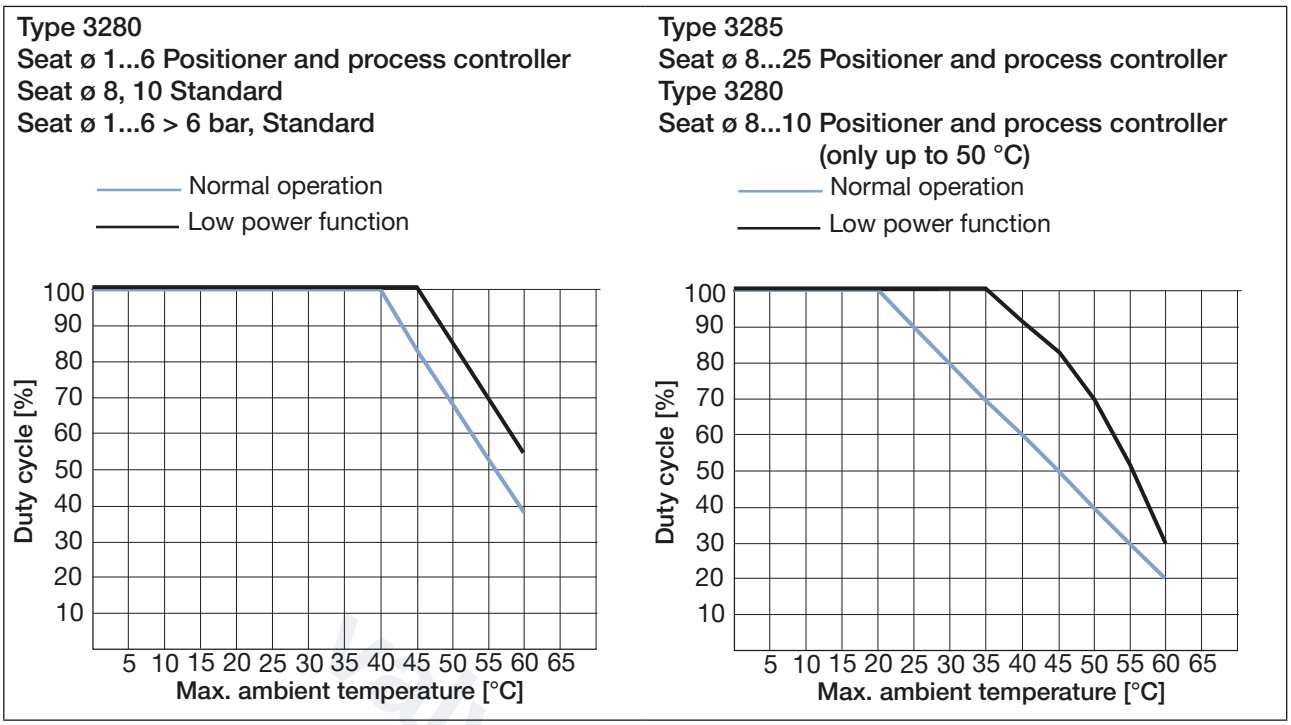

Fig. 7: Derating curve for control positioner, process controller and standard version

6.6 Fluidic data

Type	Seat diameter	$KV_{s\ value}$ [m³/h] [3]	Max. pressure [bar]
3280	1	0.03	See general information on the type label
	1.5	0.065	
	2	0.15	
	3	0.3	
	4	0.5	
	5	0.7	
	6	0.9	
	8	1.5	
	10	1.9	
3285	8	1.8	
	10	2.5	
	12	3.9	
	15	5.4	
	20	8.1	
	25	9.6	

[3] *The $KV_{s\ value}$ is a flow rate value for water, measurement at +20 °C and 1 bar pressure difference above the fully opened valve.*

MAN 1000258956 EN Version: L Status: RL (released | freigegeben) printed: 13.10.2026

valvesgo.com

7 INSTALLATION

DANGER!

Risk of injury from high pressure in the system or device.

- Before working on the system or device, cut off the pressure and deaerate/drain lines.

Risk of injury due to electrical shock.

- Before working on the system or device, switch off the power supply and secure to prevent reactivation.
- Observe applicable accident prevention and safety regulations for electrical equipment.

WARNING!

Risk of injury from improper installation.

- Installation may be carried out only by trained technicians and with the appropriate tools.
- Secure system against unintentional activation.
- Following installation, ensure a controlled or defined restart.

valvesgo.com

7.1 Installing device fluidically

Installation position: any position, preferably with actuator above and installed vertically with the actuator cover upwards

→ Clean pipelines and port connections.

→ Install a dirt filter before the valve inlet (≤ 0.3 mm for Type 3280, ≤ 0.5 mm for Type 3285).

NOTE!

Caution risk of breakage.

- Do not use plastic actuator housing as a lever arm.

→ Hold the device with a suitable tool (open-end wrench) on the body and screw into the pipeline.

→ Observe flow direction. The arrow on the body indicates the direction of flow.
Type 3280: Flow direction below seat, is always closed against the medium flow;
Type 3285: Flow direction above seat, is always closed with the medium flow.

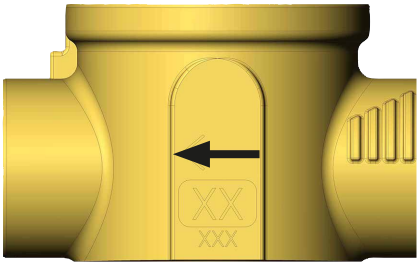

Fig. 8: Direction of flow Type 3280, Flow direction below seat

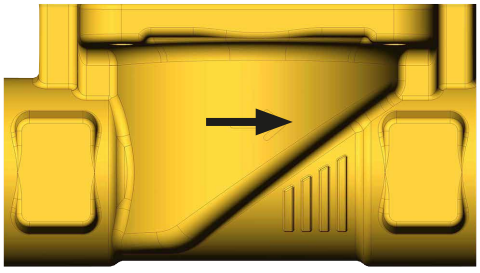

Fig. 9: Direction of flow Type 3285, Flow direction above seat[4)]

4) *Flow against the direction of the arrow is not permitted. Valve is not resistant to back pressure.*

MAN 1000258956 EN Version: L Status: RL (released | freigegeben) printed: 13.10.2026

valvesgo.com

7.1.1 Installation area for cartridge body

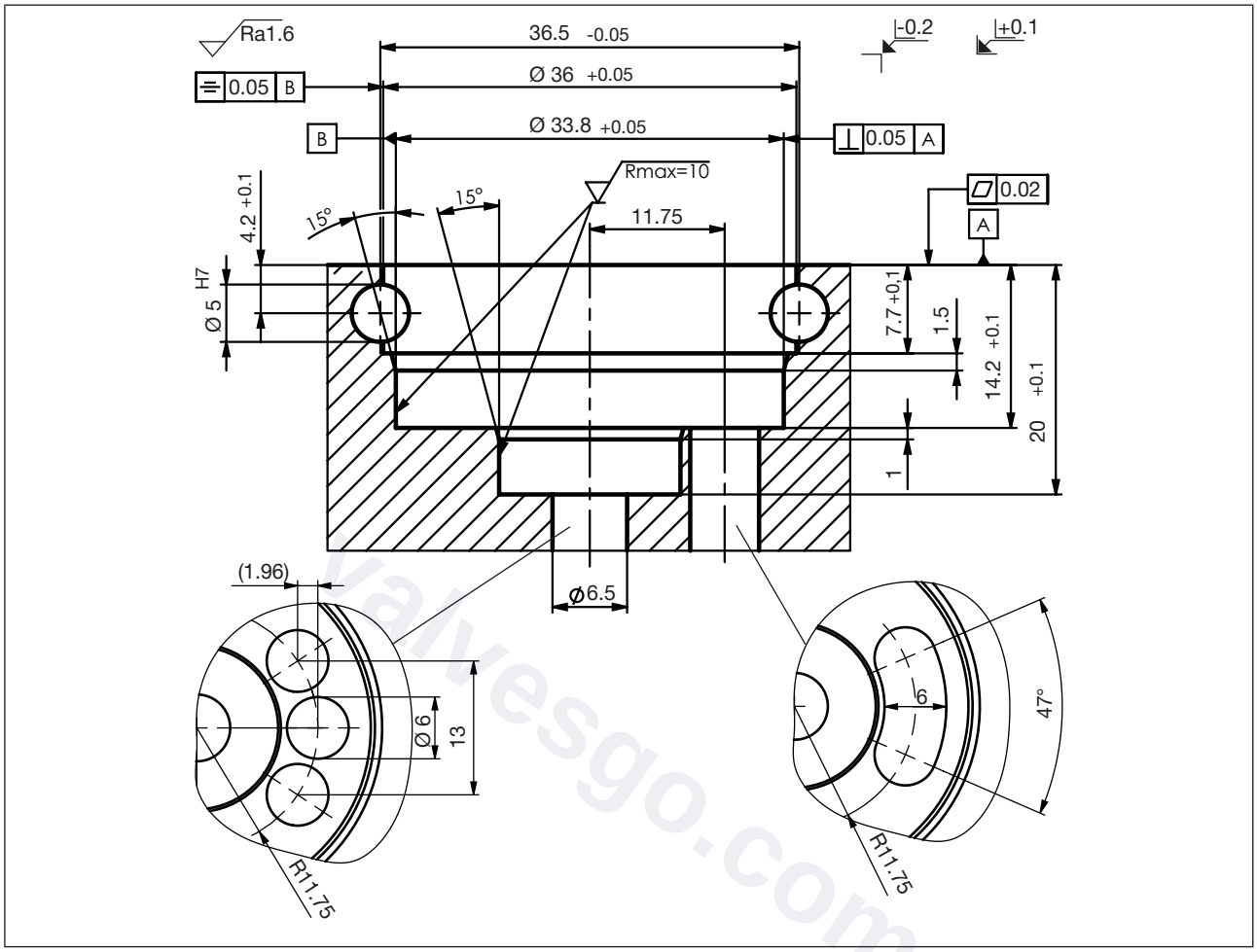

Fig. 10: Installation area for cartridge body, seat size 1 to 6

MAN 1000258956 EN Version: L Status: RL (released | freigegeben) printed: 13.10.2026

valvesgo.com

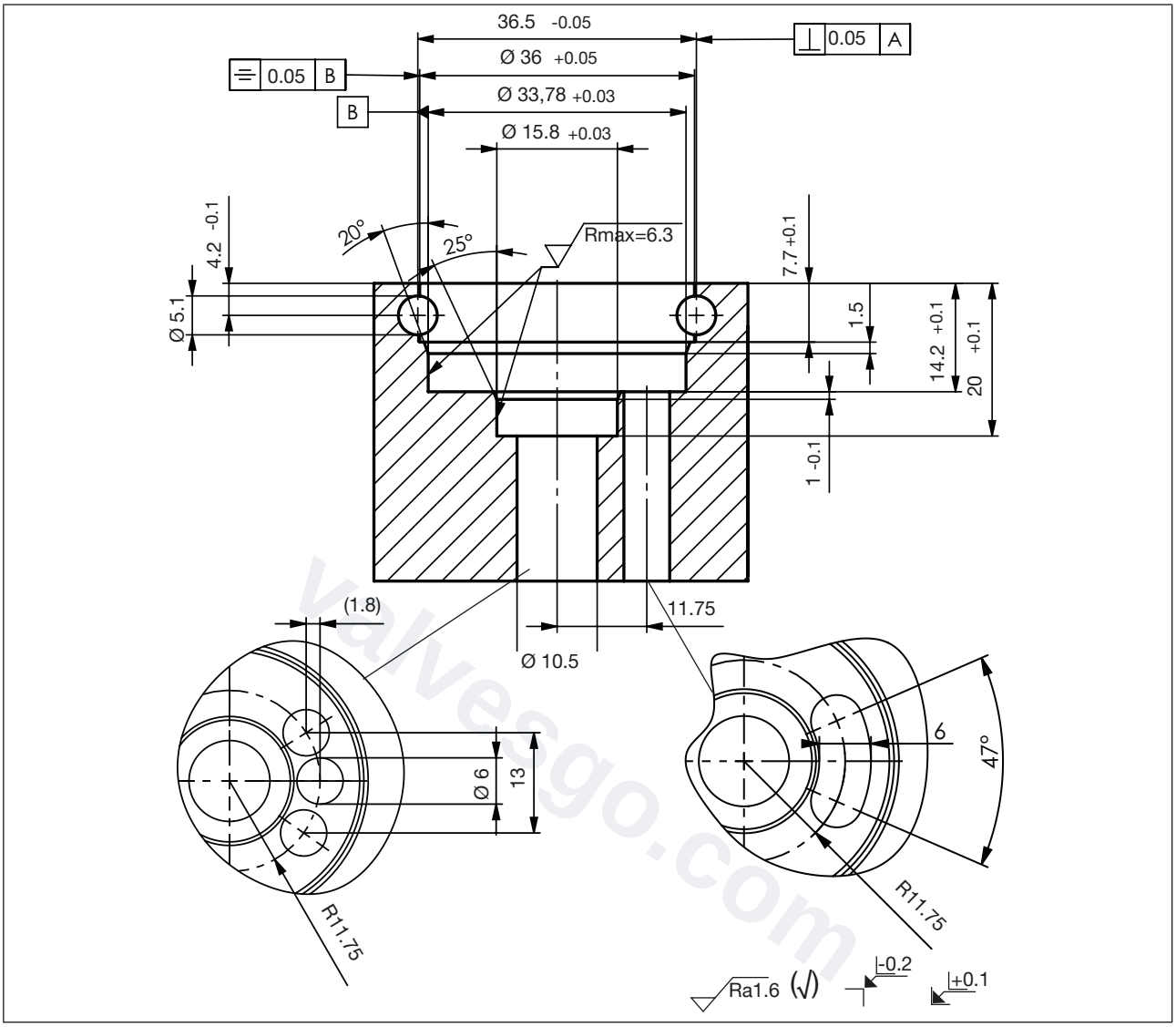

Fig. 11: Installation area for cartridge body, seat size 8 to 10

MAN 1000258956 EN Version: L Status: RL (released | freigegeben) printed: 13.10.2026

valvesgo.com

7.1.2 Installation of the proportional valve with cartridge body

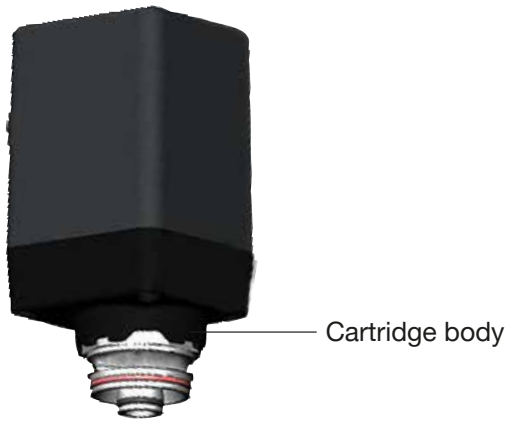

Fig. 12: Proportional valve with cartridge body

→ Check that the O-rings on the valve are clean.

→ Clean pipelines and flange connections.

If required, use a suitable lubricant (e.g. water) when installing the O-rings.

→ Install valve (see "Fig. 10") and align. When installed, the valve can no longer be turned.

→ Secure the valve using suitable fastening materials, e.g. by pinning it with 2 cylinder pins or dowel pins Ø 5 mm, min. 30 mm in length.

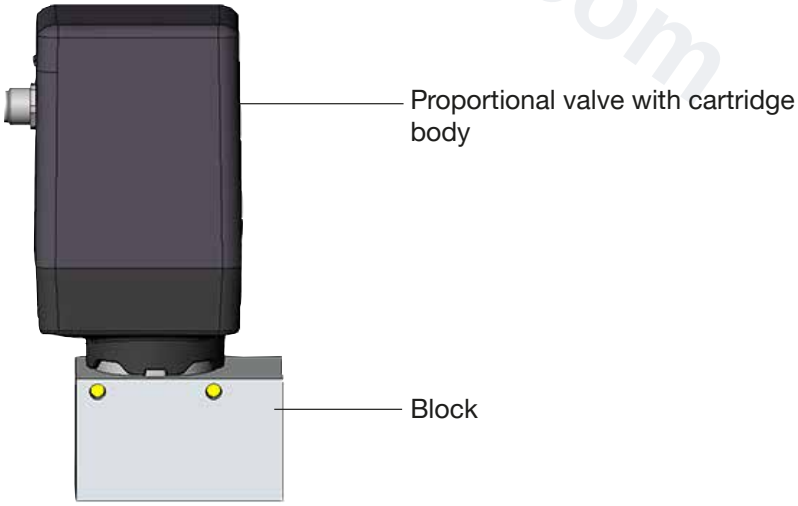

Fig. 13: Installed proportional valve with cartridge body

MAN 1000258956 EN Version: L Status: RL (released | freigegeben) printed: 13.10.2026

valvesgo.com

7.2 Installing device electrically

None of the electrical inputs and outputs of the device are galvanically isolated from the supply voltage.

DANGER!

Risk of injury due to electrical shock.

- Before working on the system or device, switch off and isolate the power supply to prevent reactivation of the device.
- Observe applicable accident prevention and safety regulations for electrical equipment.

NOTE!

Damage to the proportional valve due to incorrect supply voltage.

- The supply voltage must correspond with the voltage indicated on the type label.
- If the ground connection is not connected, the conditions of the EMC Law will not be met.

→ Connect the proportional valve according to the table.
When the supply voltage is applied, the proportional valve is ready for operation.

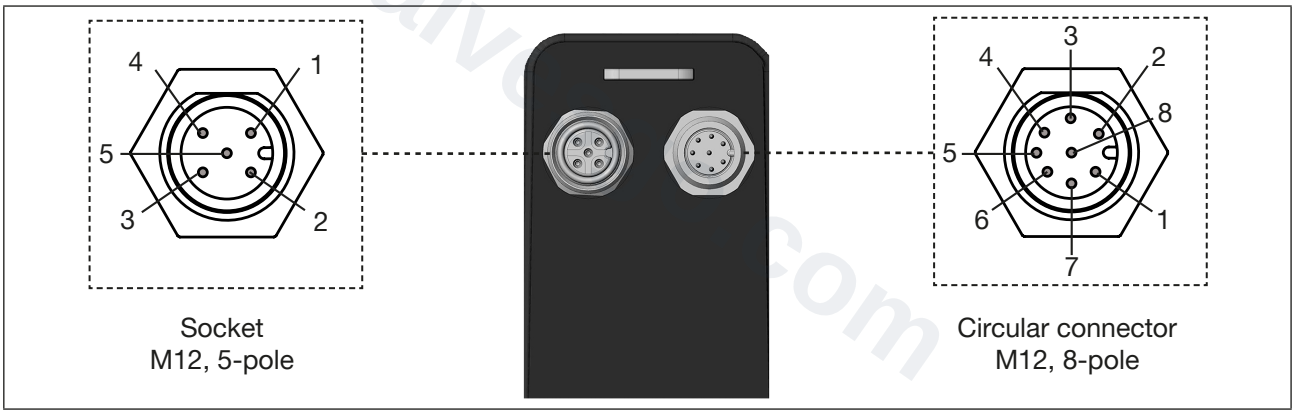

Fig. 14: Designation of the circular connector, analog version

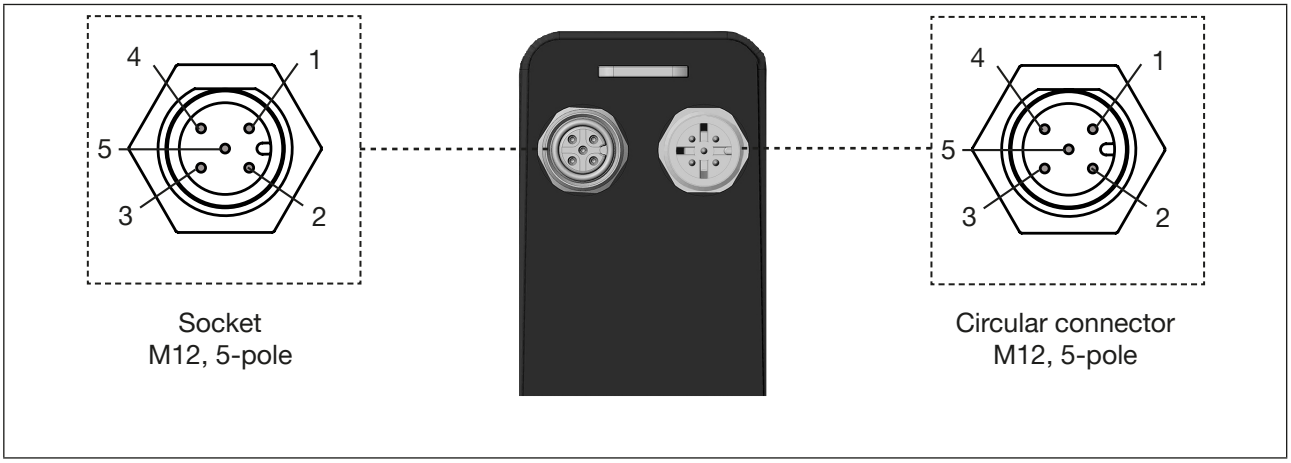

Fig. 15: Designation of the circular connector, digital version

MAN 1000258956 EN Version: L Status: RL (released | freigegeben) printed: 13.10.2026

valvesgo.com

The threaded sleeve of the M12 circular connector is connected to the valve body. Connect the body to a suitable ground connection. To ensure electromagnetic compatibility (EMC), ensure that the cable is as short as possible and the cross-section is as large as possible.

7.2.1 Pin assignment for the on-off valve, circular connector M12, 8-pole

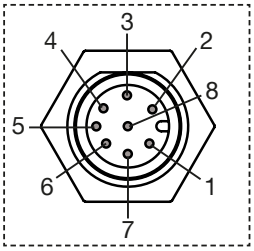

Pin	Wire colors*	Configuration	External circuit
1	white	Supply +	24 V DC ±10 %, max. residual ripple 10 %
2	brown	Supply GND	24 V DC GND
3	green	do not connect!	Electrically insulate wire on connection line
4	yellow	do not connect!	Electrically insulate wire on connection line
5	grey	do not connect!	Electrically insulate wire on connection line
6	rose	Digital input +	0...5 V (log. 0), 10...30 V (log. 1), not galvanically isolated
7	blue	Digital output	0...5 V (log. 0), 10...30 V (log. 1), not galvanically isolated
8	red	Signal GND	Signal GND
Body		Shielding	-

** The indicated wire colors refer to the connection cable, order no. 919061, available as an accessory.*

7.2.2 Pin assignment for the control valve, circular connector M12, 8-pole

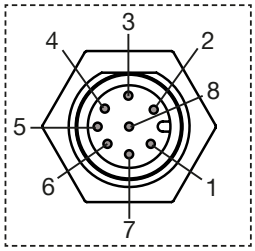

Pin	Wire colors*	Configuration	External circuit
1	white	Supply +	24 V DC ±10 %, max. residual ripple 10 %
2	brown	Supply GND	24 V DC GND
3	green	do not connect!	Electrically insulate wire on connection line
4	yellow	do not connect!	Electrically insulate wire on connection line
5	grey	do not connect!	Electrically insulate wire on connection line
6	rose	Set-point value input +	4...20 mA / 0...10 V, not galvanically isolated PWM-signal (800 Hz)
7	blue	Digital output	0...5 V (log. 0), 10...30 V (log. 1), not galvanically isolated
8	red	Signal GND	Signal GND
Body		Shielding	-

** The indicated wire colors refer to the connection cable, order no. 919061, available as an accessory.*

MAN 1000258956 EN Version: L Status: RL (released | freigegeben) printed: 13.10.2026

valvesgo.com

7.2.3 Pin assignment for the positioner

7.2.3.1 Analog version, circular connector M12, 8-pole

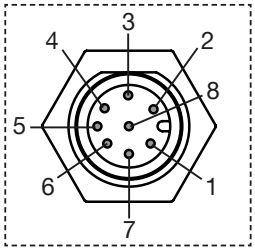

Pin	Wire colors*	Configuration	External circuit
1	white	Supply +	24 V DC ±10 %, max. residual ripple 10 %
2	brown	Supply GND	24 V DC GND
3	green	CAN low	CAN low**
4	yellow	CAN high	CAN high**
5	grey	CAN GND	CAN GND**
6	rose	Set-point value input +	0...20 mA / 4...20 mA / 0...5 V / 0...10 V, not galvanically isolated, PWM-signal (800 Hz)
7	blue	Actual value output	0...20 mA / 4...20 mA / 0...5 V / 0...10 V, not galvanically isolated
8	red	Signal GND	Signal GND
Body		Shielding	-

** The indicated wire colors refer to the connection cable, order no. 919061, available as an accessory.*
*** 3.3 V signal voltage, reliable communication decreases as the line length and transfer rate increases.*

7.2.3.2 Digital version, circular connector M12, 5-pole

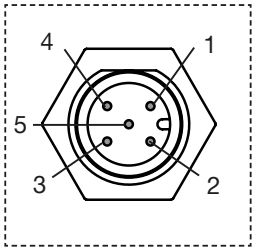

Pin	Wire colors*	Configuration	External circuit
1		Shielding	
2	red	Supply +	24 V DC ±10 %, max. residual ripple 10 %
3	black	GND	GND
4	white	CAN high	CAN high
5	blue	CAN low	CAN low

** The indicated wire colors refer to the büS cables which are available as accessories.*

MAN 1000258956 EN Version: L Status: RL (released | freigegeben) printed: 13.10.2026

valvesgo.com

7.2.4 Pin assignment for process controller

7.2.4.1 Analog version, circular connector M12, 8-pole

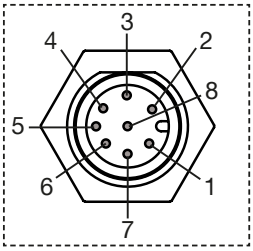

Pin	Wire colors*	Configuration	External circuit
1	white	Supply +	24 V DC ±10 %, max. residual ripple 10 %
2	brown	Supply GND	24 V DC GND
3	green	CAN low	CAN low**
4	yellow	CAN high	CAN high**
5	grey	CAN GND	CAN GND**
6	rose	Set-point value input +	0...20 mA / 4...20 mA / 0...5 V / 0...10 V, not galvanically isolated, PWM-signal (800 Hz)
7	blue	Actual value output	0...20 mA / 4...20 mA / 0...5 V / 0...10 V, not galvanically isolated
8	red	Signal GND	Signal GND
Body		Shielding	-

** The indicated wire colors refer to the connection cable, order no. 919061, available as an accessory.*

*** 3.3 V signal voltage, reliable communication decreases as the line length and transfer rate increases.*

7.2.4.2 Analog version, socket M12, 5-pole

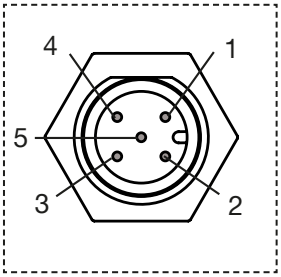

Pin	Wire colors*	Configuration	External circuit
1	brown	Sensor supply +	24 V DC ±10 %, max. residual ripple 10 %
2	white	Actual value input sensor +	0...20 mA / 4...20 mA / 0...5 V / 0...10 V
3	blue	GND	GND
4	black	GND	GND (Bridge to GND Pin 3)
5	grey	Not assigned	Not assigned
Body		Shielding	-

** The indicated wire colors refer to the connection cable, order no. 559177, available as an accessory.*

MAN 1000258956 EN Version: L Status: RL (released | freigegeben) printed: 13.10.2026

valvesgo.com

7.2.4.3 Digital version, circular connector M12, 5-pole

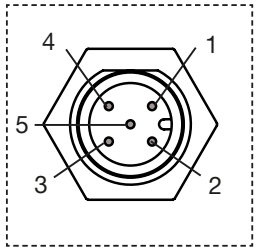

Pin	Wire colors*	Configuration	External circuit
1		Shielding	
2	red	Supply +	24 V DC ±10 %, max. residual ripple 10 %
3	black	GND	GND
4	white	CAN high	CAN high
5	blue	CAN low	CAN low

** The indicated wire colors refer to the büS cables which are available as accessories.*

7.2.4.4 Digital version, socket M12, 5-pole

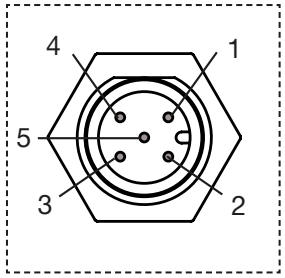

Pin	Wire colors*	Configuration	External circuit
1	brown	Sensor supply +	24 V DC ±10 %, max. residual ripple 10 %
2	white	Actual value input sensor +**	0...20 mA / 4...20 mA / 0...5 V / 0...10 V / Frequency (Pulse +)
3	blue	GND	GND
4	black	GND	GND (Bridge to GND Pin 3)
5	grey	Not assigned	Not assigned
Body		Shielding	-

** The indicated wire colors refer to the connection cable, order no. 559177, available as an accessory.*
*** A PNP sensor must be used.*

7.3 DIP switch settings (analog version only)

DANGER!

Risk of injury due to electrical shock.

- Before opening the actuator cover, switch off and isolate the power supply to prevent reactivation of the device.
- Observe applicable accident prevention and safety regulations for electrical equipment.

Although the factory settings are ideal for most applications, the settings can be adjusted with DIP switches. The DIP switches can be set to “ON” or “OFF” position depending on the factory order code.

The DIP switches are accessible on the electronic PCB by opening the actuator cover.

MAN 1000258956 EN Version: L Status: RL (released | freigegeben) printed: 13.10.2026

valvesgo.com

7.3.1 Opening the actuator cover

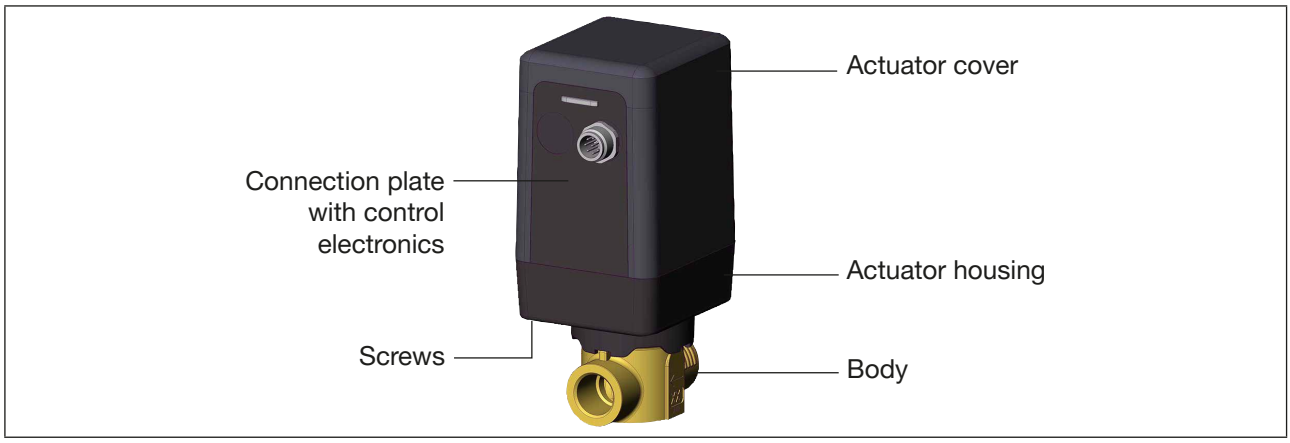

Fig. 16: Opening the actuator cover, Type 3280

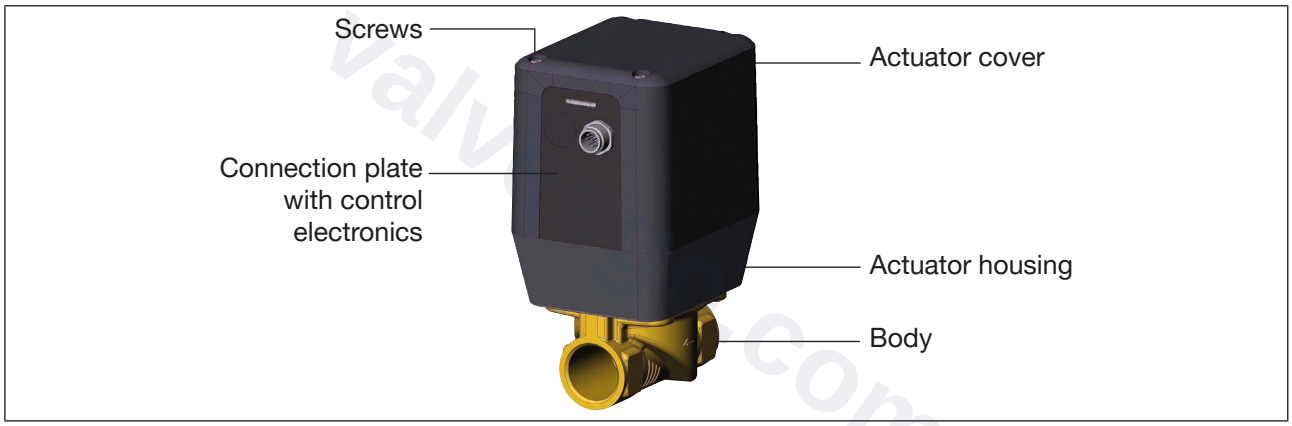

Fig. 17: Opening the actuator cover, Type 3285

→ Disconnect the power supply from the device.

→ Carefully loosen the 4 screws on the lower side of the actuator housing, Type 3280, or on the upper side of the actuator cover, Type 3285, using a suitable tool. Do not unscrew the screws completely, as they are designed not to fall out.

NOTE!

The connection plate is only plugged in and may fall down when the actuator cover is removed. When removing the cover, hold the connection plate on the plug so that the connection plate remains on the actuator housing and is not removed together with the cover.

→ Secure actuator cover and connection plate with control electronics against falling down and remove the actuator cover.

MAN 1000258956 EN Version: L Status: RL (released | freigegeben) printed: 13.10.2026

valvesgo.com

7.3.2 Setting the DIP switch

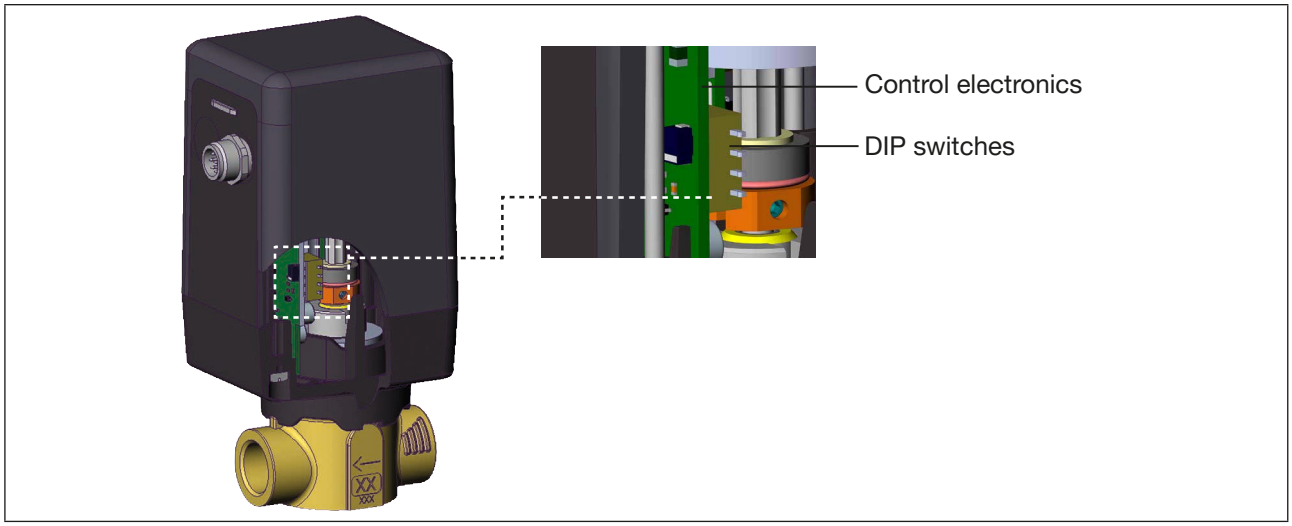

Fig. 18: Location of the DIP switch, Type 3280

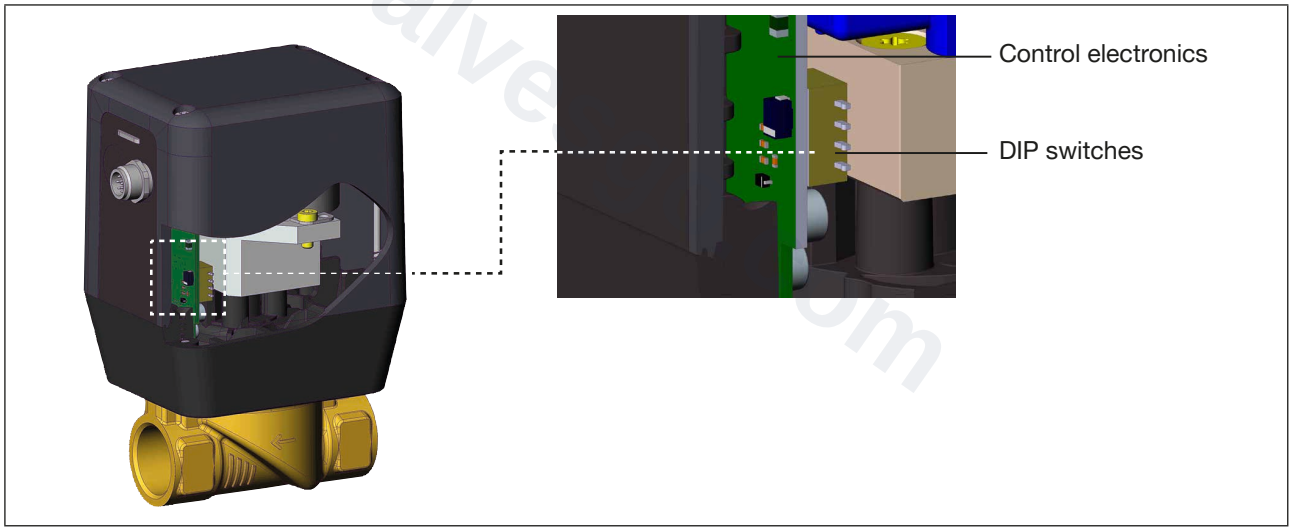

Fig. 19: Location of the DIP switch for Type 3285

→ DIP switch, set to “ON” or “OFF” depending on required function. To do this, carefully actuate the particular DIP switch using a suitable tool.

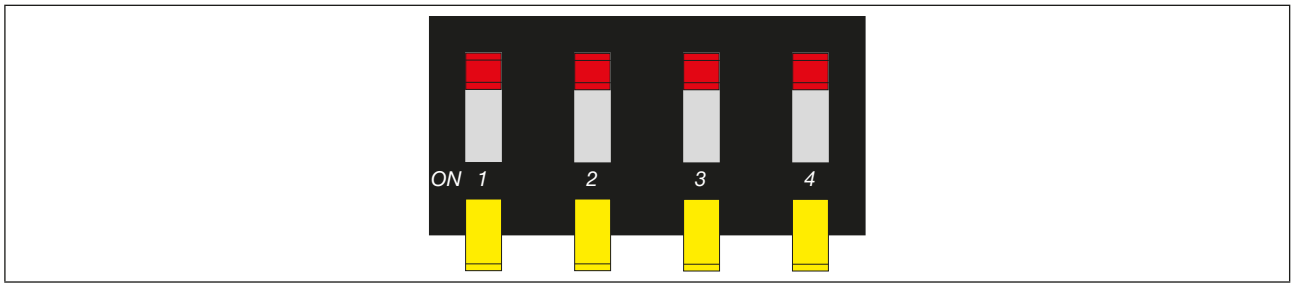

Fig. 20: DIP switches

MAN 1000258956 EN Version: L Status: RL (released | freigegeben) printed: 13.10.2026

valvesgo.com

MAN 1000258956 EN Version: L Status: RL (released | freigegeben) printed: 13.10.2026

Description of the function

DIP switches	Position	Function for the on-off	Function for the control valve	Function for the standard version PWM version	Function for the positioner and process controller version (applies to analog version only)
1	OFF	Normal operating direction of the set-point value 10...30 V = valve opens	Normal operating direction of the set-point value (e.g. set-point value 4...20 mA corresponds to position 0...100 %), increasing	Normal operating direction of the set-point value (PWM duty cycle 0–100 % corresponds to position 0–100 %), increasing	no function
	ON	Reversal of the operating direction of the set-point value 10...30 V = valve closes	Reversal of the operating direction of the set-point value (e.g. set-point value 20...4 mA corresponds to position 0...100 %), decreasing	Reversal of the operating direction of the set-point value (PWM duty cycle 0–100 % corresponds to position 0–100 %), decreasing	no function
2	OFF	no function	Set-point value input 4...20 mA	no function	no function
	ON	no function	Set-point value input 0...10 V	no function	no function
3	OFF	Valve actuating speed: normal mode	Valve actuating speed: normal mode	Valve actuating speed: normal mode	büS
	ON	Valve actuating speed: slow mode	Valve actuating speed: slow mode	Valve actuating speed: slow mode	CANopen
4	OFF	Low power function: off	Low power function: off	Low power function: off	no function
	ON	Low power function: on, lower force, less heat generation in the valve	Low power function: on, lower force, less heat generation in the valve	Low power function: on, lower force, less heat generation in the valve	no function

Whether the device is a PWM version can be found on the type label.

The change in function does not become effective until the supply voltage is applied again.
A more precise description of the functions can be found in chapter “8 Start-up”.

valvesgo.com

7.3.3 Closing the actuator cover

NOTE!

Damage or malfunction due to ingress of dirt and moisture!

▸ To guarantee protection class IP, ensure that the actuator housing has been installed correctly.

⚠ Do not clamp any loose cables!

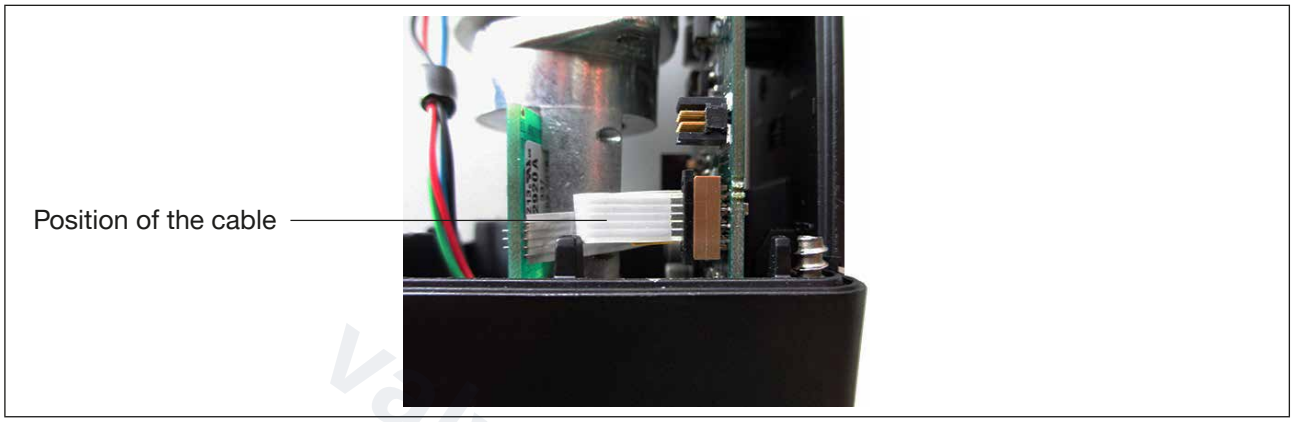

Fig. 21: Correct position of the cable

→ Carefully attach actuator cover.

→ Manually insert 4 screws into the designated holes on the lower side of the actuator housing, Type 3280, or on the upper side of the actuator cover, Type 3285, and turn them onto the first thread.

→ Tighten screws (tightening torque: 2 Nm).

MAN 1000258956 EN Version: L Status: RL (released | freigegeben) printed: 13.10.2026

valvesgo.com

7.4 Accepting and saving SIM card data (digital version only)

The optionally available SIM card can be used to save and transfer device-specific values and user settings to a different device.

A SIM card which has just been inserted is checked for existing data during device restart. Where applicable, this data is accepted or overwritten:

- The SIM card does not contain any data.
The existing device-specific values and user settings are saved on the SIM card.

- The SIM card contains data which is compatible with the device.
The SIM card data is accepted by the device. The existing device-specific values and user settings are overwritten.

- The SIM card contains data which is not compatible with the device.
The device overwrites the data on the SIM card with its own, device-specific values and user settings.

NOTE!

Do not use any commercially available SIM cards for the device.
The inserted SIM card is a special industrial version which is particularly durable and temperature-resistant.

▸ Order the SIM card via your Bürkert sales department only.

Inserting the SIM card:

→ Open device (see chapter “7.3”).

→ Carefully push SIM card into the device.

→ Overcome the opposing force of the spring contact and insert all the way. Bürkert lettering on the side facing away from the printed circuit board and beveled side upwards.

→ Close device (see chapter “7.3”).

→ Restart device.
The new data are transferred.

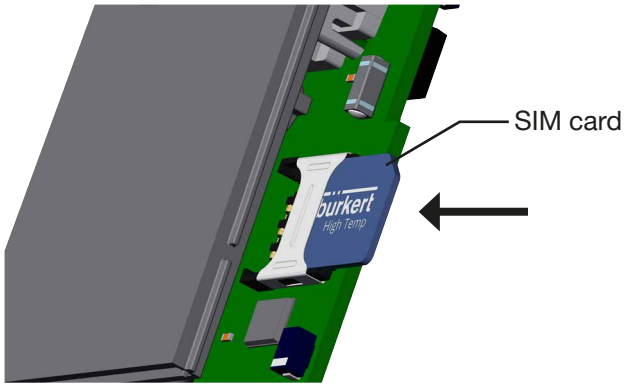

Fig. 22: Inserting the SIM card

MAN 1000258956 EN Version: L Status: RL (released | freigegeben) printed: 13.10.2026

valvesgo.com

7.5 LED display

With the aid of the positioner version and process controller version, it is possible to use the Bürkert-Communicator Software to toggle the LED colors between standard and NAMUR NE 107.

7.5.1 Display elements standard

LED color	Status	Display
white	continuously on	Normal operation
yellow	continuously on	Valve completely open
	flashing, color alternates with the colors of the valve position	Out of specification: Ambient conditions or process conditions for the device are outside the specified area. Internal device diagnostics point to problems in the device or the process properties
green	continuously on	Valve closed
red	flashing, color alternates with the colors of the valve position	Error see chapter “9.3 Troubleshooting”, page 47
white, green or red	flashing	Is used to identify a device in the büS network. The „flashing“ status is started in the Bürkert Communicator Software when selecting the device
orange	flashing, color alternates with the colors of the valve position	Function check: Work is being carried out on the device; controlled operation is therefore temporarily not possible
blue	flashing, color alternates with the colors of the valve position	The configuration is not correctly managed by a provider (see Central configuration management of Bürkert devices)
no color or LED off	-	Valve without power supply

MAN 1000258956 EN Version: L Status: RL (released | freigegeben) printed: 13.10.2026

valvesgo.com

7.5.2 Display elements NAMUR NE 107

LED color	Color code	Status	Description	Display
green	1	continu-ously on	Diagnostics active	Device is operating faultlessly. Status changes are shown in color. Messages are transmitted via any connected field bus.
red	5	continu-ously on	Failure, error or fault	Due to a malfunction in the device or on its periphery, controlled operation is not possible.
green or red	1 or 5	flashing		Is used to identify a device in the büS network. The „flashing“ status is started in the Bürkert Communi-cator Software when selecting the device
orange	4	continu-ously on	Function check	The device is being worked on; controlled operation is therefore temporarily not possible.
yellow	3	continu-ously on	Outside the specification	The ambient conditions or process conditions for the device are outside the specified area. Device internal diagnostics point to problems in the device or with the process properties.
blue		flashing		The configuration is not correctly managed by a pro-vider (see Central configuration management of Bürkert devices)
no color or LED off	-	-	-	Valve without power supply

MAN 1000258956 EN Version: L Status: RL (released | freigegeben) printed: 13.10.2026

Valvesgo.com

valvesgo.com

8 START-UP

WARNING!

Danger due to improper operation.

Improper operation may result in injuries as well as damage to the device and the area around it.

- The operating personnel must know and have understood the contents of the operating instructions.
- Observe the safety instructions and intended use.
- Only adequately trained personnel may operate the device.

Before start-up, carry out fluid and electrical installation of the valve.

Proportional valve Type 3280 and 3285 has different functions which can be configured and parametrized via the DIP switches.

8.1 Functions of the standard device

The following basic functions can be activated or changed via the DIP switches.

Function	Description
Zero point shut-off (not for on-off)	The valve has a zero point shut-off which guarantees that the valve closes tight when input signals are below a threshold of 1 % of the input signal. The valve is closed when values are below this threshold
Interruption in the power supply	When the power supply is interrupted, the valve remains in its respective position. When the supply voltage is applied again, the control electronics automatically detect its current valve position and will automatically adjust the valve position if standard signal has changed
Digital output	When the valve reaches the closed position, the position can be relayed e.g. to a PLC via the digital output. 10 to 30 V = log “1” = valve closed
Analog input (set-point value input) (not for on-off)	0...10 V standard signal or 4...20 mA standard signal, see chapter “7.3”. With a set-point value input of 4...20 mA, the valve stops in the current position and the LED flashes red (signal error detection) if the value of the input signal falls below 4 mA
Digital input (set-point value input) (only for on-off)	The digital input is used as a normally closed contact. When 10 - 30 V is applied, the valve opens. 0...5 V = log „0“, 10...30 V = log „1“ Inverted input correspondingly inverted!
Effective direction	The normal effective direction of the set-point value can be set to increasing or decreasing (see chapter “7.3”). If valves are set to increasing, the valve is opened as far as possible with the largest set-point
Valve actuating speed	Two valve actuating speeds can be set (see chapter “7.3”). At normal valve speed the proportional valve moves from the closed valve position to the open valve position (0...100 %) in 2.5 s (Type 3280), 4 s (Type 3285). At slow valve speed the proportional valve moves from 0...100 % in 5 s (Type 3280), 10 s (Type 3285)

MAN 1000258956 EN Version: L Status: RL (released | freigegeben) printed: 13.10.2026

valvesgo.com

Low power function	The proportional valve has a low power function which can be adjusted (see chapter "7.3"). When the function is switched on, the proportional is supplied with lower current. The proportional then provides a lower torque; as a result the maximum permitted medium pressure is lower. The function may be used only at very low differential pressures from input to output (max. medium pressure 3 bar, max. differential pressure 1 bar)

8.2 Functions of the positioner and process controller version

Proportional valve Type 3280 and 3285 has different functions, which can be changed via the DIP switches and communications software.

Functions for positioner and process controller:

Function	Description
Zero point shut-off	The valve features a zero point shut-off which ensures sealing of the valve with input signals below a set input signal threshold. The valve is closed when values are below this threshold. See chapter "8.3.1"
Interruption in the power supply	When the power supply is interrupted, the valve remains in its respective position. When the supply voltage is applied again, the control electronics automatically detect its current valve position and will automatically adjust the valve position if standard signal has changed
Correction characteristic for adapting the operating characteristic	Use this additional function to select a transfer characteristic in relation to the set-point value (set-point position, *CMD*) and the valve stroke *(POS)* for correcting the flow or operating characteristic. See chapter "8.3.1"
Insensitivity range	The position controller is only activated once a defined control difference has been achieved. See chapter "8.3.1"
Effective direction	Reversal of the effective direction of the set-point value. See chapter "8.3.1"
Safety position	Definition of the safety position for set-point value input < 4 mA. See chapter "8.3.1"
Value actuating speed	Input of the opening and closing time. See chapter "8.3.1"
Limit of the mechanical valve positioning range	The physical positioning range is limited to defined ranges.
Simulation	Simulation of set-point values for testing device functions, see description in chapter "8.3.1"
Analog input (set-point value input) (analog version only)	4...20 mA; 0...20 mA; 0...5 V; 0...10 V can be set as standard signals, see chapter "8.3.1"
Analog output (actual value output) (analog version only)	4...20 mA; 0...20 mA; 0...5 V; 0...10 V can be set as standard signals, see chapter "8.3.1"
User calibration	Changing the factory calibration of the signal input. See chapter "8.3.1"
Energy save function	The proportional valve features a set table energy-saving function. When the energy-saving function is switched on, less current is supplied to the proportional. The proportional then provides a smaller torque, resulting in a reduced max. permissible medium pressure. Only use the energy-saving function with very low differential pressures from On-Closed output (max. medium pressure 3 bar, max. differential pressure 1 bar). See chapter "8.3.1"

MAN 1000258956 EN Version: L Status: RL (released | freigegeben) printed: 13.10.2026

valvesgo.com

Parameterization interface	büS or CANopen can be selected as a parameterization interface. See chapter “7.3”
Communications interface	In the case of the digital version, it is possible to communicate with the device via büS/CANopen (e.g. set-point/actual values)

Functions for process controller only:

Function	Description
Physical scaling of the process variables	Function for scaling process actual value and process set-point value. See chapter „8.3.2“
Process controller optimization	Function for optimizing the process controller parameters. See chapter „8.3.2“
Process characteristic linearization	Function for linearization of the process characteristics. See chapter „8.3.2“
Parameterization of the PID process controller	Setting amplification factor (P-component), reset time (I-component), derivative time (D-component), insensitivity range (dead band), filtering of the process actual value input. See chapter „8.3.2“
Simulation of process values	Simulation of actual values for testing device functions. See chapter „8.3.2“
Analog input (actual value input)	4...20 mA; 0...20 mA; 0...5 V; 0...10 V can be set as standard signals. See chapter „8.3.2“ In the case of the digital version, the actual value input can process not only the standard signals but also frequency signals

MAN 1000258956 EN Version: L Status: RL (released | freigegeben) printed: 13.10.2026

valvesgo.com

8.3 Setting options

The Bürkert Communicator software enables communication with valves 3280 and 3285.

The operating instructions for the Bürkert Communicator can be found at www.burkert.com.

8.3.1 Setting options for running positioner and process controller

INPUT/OUTPUT
Selected standard signal

Under this menu option, enter the signal used for the set-point value or actual value

- Current 4...20 mA (for digital version only actual value)
- Current 0...20 mA (for digital version only actual value)
- Voltage 0...10 V (for digital version only actual value)
- Voltage 0...5 V (for digital version only actual value)
- CANopen/büS (digital version only)
- Frequency (digital version only)

SIGNAL.SIM
Simulation of the set-point value

Use this function to simulate the set-point value. The set set-point value source is ignored by the device during simulation. The following types of signal can be entered:

Sinus Sine wave

Square Square wave

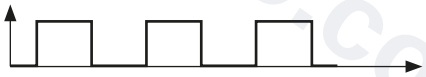

Triangle Triangle wave

Fixed Manual input of a fixed set-point value

The following parameters can be set for the selected waveform:

Menu option	Parameter setting	Schematic representation with sine wave
Offset	(Zero offset as %)	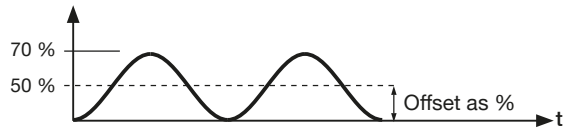
Amplitude	(Amplitude as %)	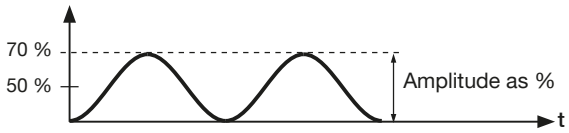
Periode	(Cycle duration in s)	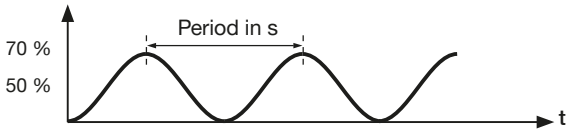

MAN 1000258956 EN Version: L Status: RL (released | freigegeben) printed: 13.10.2026

valvesgo.com

X.CONTROL
Parameterization of the position controller, insensitivity range (dead band) of the position controller

Input of the dead band in %, with regard to the scaled stroke/rotation angle range. This function ensures that the controller is only activated once a certain control difference has been achieved.

X.TIME
Limiting the control speed

Smaller control speeds can be entered in order to limit the control speed. Following settings via the Bürkert-ommunicator are possible:

Mode	Max. control speed [sec.]
Slow 1	2.8
Slow 2	3.2
Normal	2.5
Faster	2.2

DIR.CMD
Effective sense or effective direction of the position controller set-point value

Use this auxiliary function to set the sense of effective direction between the input signal (*INPUT*) and the nominal position (*CMD*) of the actuator.

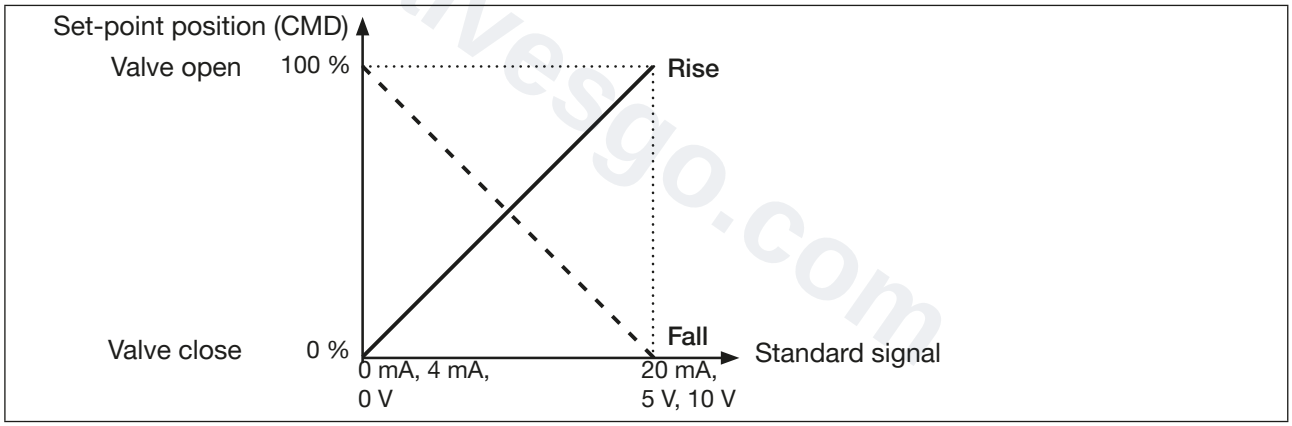

Fig. 23: Graph of effective direction

F.LIMIT
Energy-saving function

The proportional valve features a set table energy-saving function. When the energy-saving function is switched on, less current is supplied to the proportional. The proportional then provides a smaller torque, resulting in a reduced max. permissible medium pressure. Only use the energy-saving function with very low differential pressures from On-Closed output (max. medium pressure 3 bar, max. differential pressure 1 bar).

SAFEPOS when büS/CANopen
Entry of the safety position

You can input how the actuator is to behave if communications fail. It is possible to move the actuator into any position or to pause it in the current position.

MAN 1000258956 EN Version: L Status: RL (released | freigegeben) printed: 13.10.2026

valvesgo.com

SAFEPOS when using the energy pack module (capacitive buffer module ID 773 440)
Entry of the safety position

To be able to approach a valve safety position in the event of a power failure, the valve must be energized via the capacitive buffer module. In the event of a power failure, the buffer module provides an output voltage of 18 V DC for several seconds. The reduced input voltage is detected by the valve and the safety position is approached accordingly. It is possible to move the actuator into any position or to pause it in the current position. This Safepos function has the highest priority.

SAFEPOS when standard signal < 4 mA
Entry of the safety position

At a set-point value input of 4...20 mA, you can input how the actuator is to behave if the input signal drops below 4 mA (signal fault detection). It is possible to move the actuator to the respective end positions or to pause it in the current position.

X.LIMIT
Limits the mechanical valve positioning range

This function limits the (physical) stroke to specified % values (lower and upper). In doing so, the stroke range of the limited stroke is set equal to 100 %. If the limited stroke range is left during operation, negative actual position or actual position greater than 100 % are indicated.

Factory setting: Lower position limit = 0 %, Upper position limit = 100 %

Adjustment range:
Lower position limit: 0...20 % of the total stroke
Upper position limit: 80...100 % of the total stroke

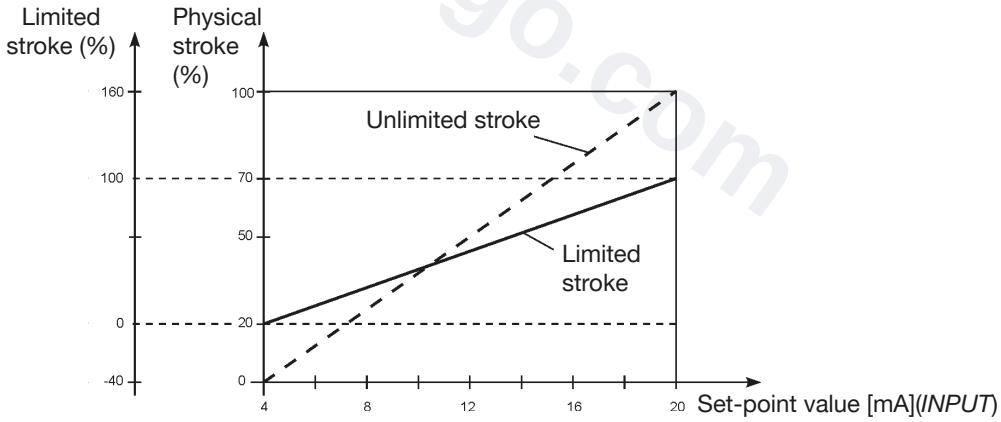

Fig. 24: Diaphragm X.LIMIT

CUTOFF
Sealing function for position controller / process controller

This function causes the valve to be sealed outside the control area. Enter the limits for the position set-point value *(CMD)* or process set-point value after which the actuator is closed fully.

CHARACT
Select the transfer characteristic between input signal (position set-point value) and stroke (correction characteristic)

Use this auxiliary function to select a transfer characteristic with reference to set-point value (nominal position, *CMD*) and valve position (*POS*) for correction of the flow-rate or operating characteristic.

MAN 1000258956 EN Version: L Status: RL (released | freigegeben) printed: 13.10.2026

valvesgo.com

The flow characteristic $k_V = f(s)$ indicates the flow-rate of a valve, expressed by the k_V value depending on the position/angle s. It is specified by the design of the valve seat and the seat seal. In general two types of flow characteristics are implemented, the linear and the equal percentage.

In the case of linear characteristics identical k_V value changes k_V are assigned to identical stroke changes ds ($dk_v=n_{lin}*ds$). In the case of an equal percentage characteristic an equal percentage change of the k_V value corresponds to a stroke change ds ($dk_v/k_v=n_{eqlprct}*ds$). The operating characteristic Q = f(s) states the correlation between the volume flow Q, which flows through the valve installed in the system, and the position/angle s.

In the case of control tasks for closed-loop control systems it is usually particular demands which are placed on the course of the operating characteristic, e.g. linearity. For this reason it is occasionally necessary to correct the course of the operating characteristic in a suitable way. Equal percentage characteristics 1:25, 1:33, 1:50, 25:1, 33:1 and 50:1 and a linear characteristic can be set. Furthermore, a characteristic can be freely programmed.

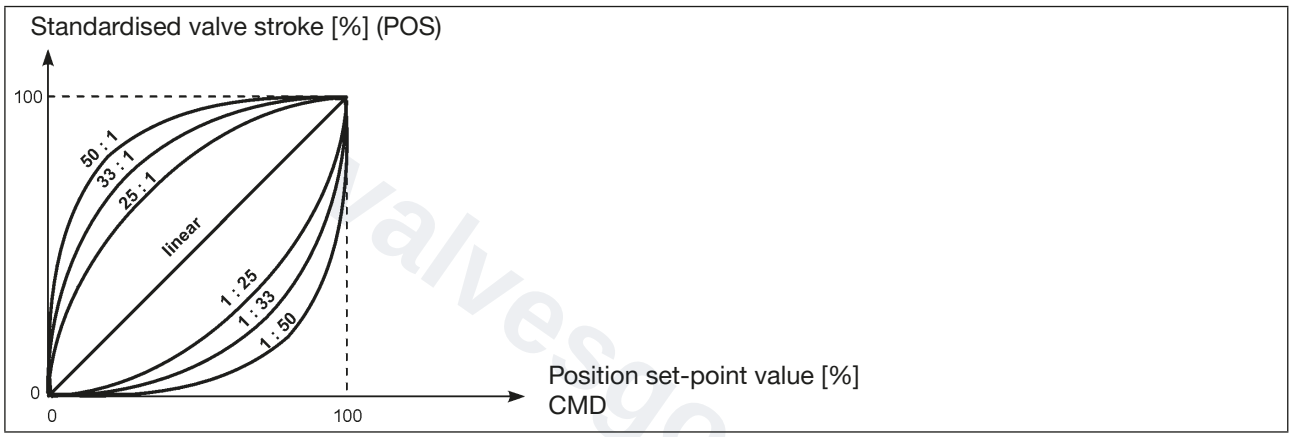

Fig. 25: Characteristics

MAN 1000258956 EN Version: L Status: RL (released | freigegeben) printed: 13.10.2026

valvesgo.com

8.3.2 Setting options for running process controller

PV.SCALE/SP.SCALE
Scaling of the process controller

The function can be used to specify the following settings:

- Unit of the process actual value
- Position of the decimal point
- Values for the lower and upper process actual value
- Values for the lower and upper process set-point value

Scaling example for the 4...20 mA input
Process actual value from the transmitter: 4...20 mA corresponds to 0...10 l/min
Process set-point value from PLC: 4...20 mA corresponds to 0...8 l/min

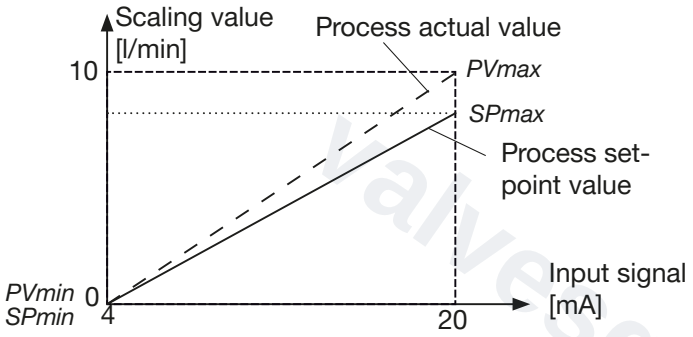

Example for the input of scaling values

	Version 1	Version 2	Version 3
PVmin	0	0	0
PVmax	1.0	10.0	100.0
SPmin	0	0	0
SPmax	0.8	8.0	80.0

Fig. 26: Example of a sensor calibration

When setting up a process control, observe the following sequence: *P.LIN* → *P.TUNE*

P.LIN
Linearization of the process

This function can be used to linearize the process characteristic. In doing so, the nodes for the correction characteristic are automatically determined. To do this, the program runs through the valve positioning range in 20 steps and measures the associated process variable.

The correction characteristic and the associated value pairs are saved in the menu item CHARACT → FREE. This is where they can be viewed and freely programmed.

P.TUNE
Self-optimization of the process controller

To obtain a good control performance, the structure and parameterization of the controller must be adjusted to the properties of the process (control system). This function can be used to parameterize the PID controller integrated in the process controller. In doing so, the parameters for the P, I and D-components of the PID controller are automatically determined and transferred into the corresponding menus from (KP, TN, TV). This is where they can be viewed and changed.

P.CONTROL
Parameterization of the process controller

- Insensitivity range (dead band).

This function specifies that the process controller will respond from a certain control difference only.

MAN 1000258956 EN Version: L Status: RL (released | freigegeben) printed: 13.10.2026

valvesgo.com

- Amplification factor of the process controller.
The amplification factor determines the P-component of the PID controller.
- Reset time of the process controller.
The reset time determines the I-component of the PID controller.
- Derivative time of the process controller.
The derivative time determines the D-component of the PID controller.
- Filtering of the process actual value input.
The filter of the input signal has a low-pass performance and can be adjusted in several stages.

Setting of the filter effect

Setting	Corresponds to cut-off frequency (Hz)	Effect
0	10	Lowest filter effect
1	5	
2	2	
3	1	
4	0.5	
5	0.2	
6	0.1	
7	0.07	
8	0.05	
9	0.03	Largest filter effect

P.SIM
Simulation of the process

This function can be used to simulate the process. The following parameters can be set:

SIM.Gain Specify amplification factor

SIM.Delay Specify time constant in seconds

Example of a simulated process:

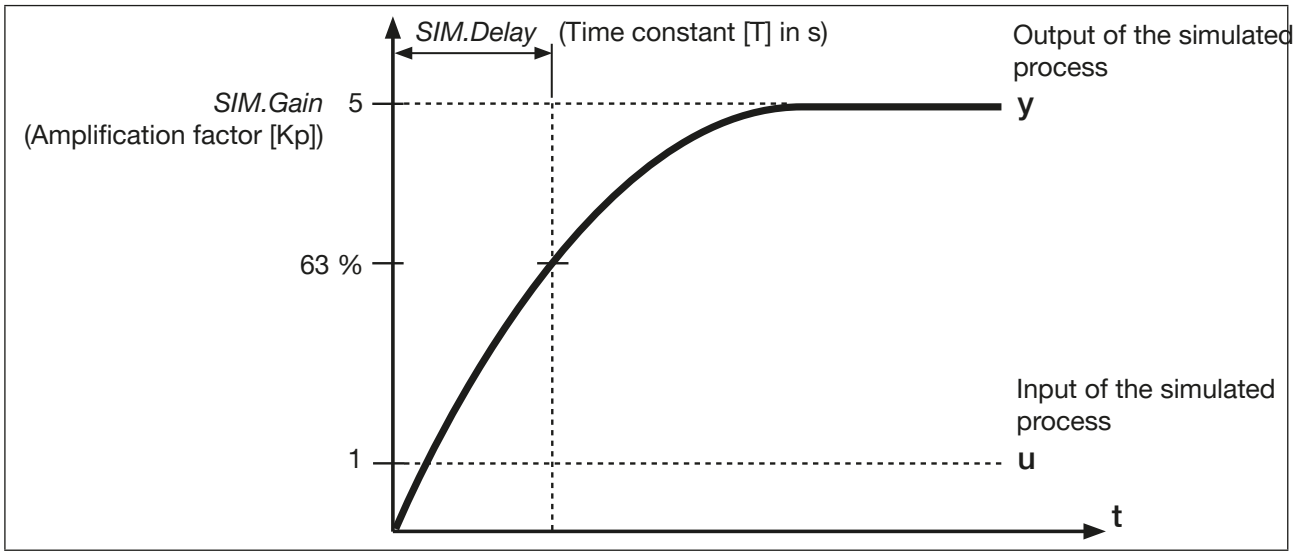

Fig. 27: Example of a simulated process. Performance of the PT1 element

MAN 1000258956 EN Version: L Status: RL (released | freigegeben) printed: 13.10.2026

valvesgo.com

8.3.3 Other settings

CAL INP
Calibration of the position set-point value (4...20 mA; 0...20 mA; 0...5 V; 0...10 V)

The set-point value input can be re-calibrated using this auxiliary function. Acceptance of the min. input signal (0 mA; 4 mA; 0 V): Create the minimum value of the input signal at the input and confirm it in the software. Acceptance of the max. input signal (20 mA; 5 V; 10 V): Create the maximum value of the input signal at the input and confirm it in the software.

Calibration of the position actual value (4...20 mA; 0...20 mA; 0...5 V; 0...10 V)

This additional function can be used to recalibrate the actual input. Acceptance of the minimum input signal (0 mA; 4 mA; 0 V): Set the minimum value of the unit signal at the input and confirm value in the software. Acceptance of the maximum input signal (20 mA; 5 V; 10 V): Set the maximum value of the unit signal at the input and confirm value in the software.

FACTORY RESET
Reset to the factory settings

Use this function to reset all user settings to the delivery status. All parameters, except for the calibration values, are reset to default values. The hardware is subsequently reset.

DIAGNOSIS

Errors can be read via this function.

TOGGLE LED DISPLAY
Toggle the LED colors between standard and NAMUR NE 107

Use this function to toggle the colors for displaying the device status between standard and NAMUR NE 107.

8.4 Configuration management

The central configuration management makes the rapid replacement of Bürkert devices possible with no configuration effort.

The central configuration management comprises a configuration provider which reads the configuration from the configuration client and saves it centrally.

The configuration client settings are available in the following menu:

Menu: General settings → Parameters detailed viewed → Configuration Client

Further information on the Configuration Client is described in the Software manual under www.burkert.com → Central configuration management of Bürkert devices.

MAN 1000258956 EN Version: L Status: RL (released | freigegeben) printed: 13.10.2026

valvesgo.com

9 MAINTENANCE, TROUBLESHOOTING

DANGER!

Risk of injury from high pressure in the system or device.

- Before working on the system or device, cut off the pressure and deaerate/drain lines.

Risk of injury due to electrical shock.

- Before working on the system or device, switch off and isolate the power supply to prevent reactivation of the device.
- Observe applicable accident prevention and safety regulations for electrical equipment.

WARNING!

Risk of injury from improper maintenance work.

- Maintenance may be carried out only by trained technicians and with the appropriate tools!
- Secure system against unintentional activation.
- Following maintenance, ensure a controlled restart.

9.1 Maintenance

The proportional valve Type 3280 and 3285 is maintenance-free under normal conditions.

9.2 Cleaning

Use the normal cleaning agents to clean the Type 3280 and 3285. Use no alkaline cleansing agents, as these have a damaging effect on the materials used.

9.3 Troubleshooting

In malfunctions occur, check:

- the port connectors,
- whether the operating pressure is within the permitted range,
- the power supply and the standard signals.

MAN 1000258956 EN Version: L Status: RL (released | freigegeben) printed: 13.10.2026

valvesgo.com

Problem	Possible cause	Remedial action
LED is not lit	No power supply	Check the electrical connections
LED flashes sporadically white	The power supply collapses periodically - device software reboots each time	Select power supply with adequate power Check cable for possible lose connections
LED flashes red / LED illuminates red	The residual ripple of the supply voltage is too high	Use power supply with a smooth output voltage at the required power After eliminating the fault, restart the device for normal operating (isolate from power supply)
	Temperature too high	Observe max. ambient temperature / medium temperature; if required reduce duty cycle (see derating curve) When activating standard: After eliminating the fault to cancel the red flashing LED, restart the device (isolate from power supply) When activating position controller and process controller: If the device temperature drops below the set limit after cooling, the fault is automatically deleted by the device
	Standard signal is < 4 mA; cable break	Check cable for possible lose connections
	Fault with position measuring system	Check cables in the device for possible loose connections
	Communications failure büS/CANopen	Check cables for possible loose connections
No flow rate available	The set-point value is below the limit for the zero point shut-off	Increase set-point value
Valve opens even though it should close	Operating direction of the set-point value has been set incorrectly	Change direction of the set-point
Motor is making an unusual droning noise	Gearbox or motor blocked	Return device to the manufacturer to have the fault repaired
Valve is not opening / closing correctly	Low power function activated; motor torque for medium pressure too low	Deactivate low power function
Valve is not sealed	Dirt between seal and valve seat	Install dirt filter and return device to the manufacturer for cleaning

MAN 1000258956 EN Version: L Status: RL (released | freigegeben) printed: 13.10.2026

valvesgo.com

10 SPARE PARTS

CAUTION!

Risk of injury and/or damage by the use of incorrect parts.

Incorrect accessories and unsuitable spare parts may cause injuries and damage the device and the surrounding area.

- Use original accessories and original spare parts from Bürkert only.

10.1 Accessories

Bürkert-Communicator software can be found on the Internet at www.burkert.com

For other accessories see data sheet on the Internet.

MAN 1000258956 EN Version: L Status: RL (released | freigegeben) printed: 13.10.2026

valvesgo.com

valvesgo.com

11 PACKAGING AND TRANSPORT

NOTE!

Transport damage.

Inadequately protected devices may be damaged during transportation.

- Protect the device against moisture and dirt in shock-resistant packaging during transportation.
- Prevent the temperature from exceeding or dropping below the permitted storage temperature.
- Using protective caps, protect the electrical interfaces from damage.

12 STORAGE

NOTE!

Incorrect storage may damage the device.

- Store the device in a dry and dust-free location.
- Storage temperature: –20 °C...+70 °C.

13 ENVIRONMENTALLY FRIENDLY DISPOSAL

- Follow national regulations regarding disposal and the environment.
- Collect electrical and electronic devices separately and dispose of them as special waste.

Further information at country.burkert.com

MAN 1000258956 EN Version: L Status: RL (released | freigegeben) printed: 13.10.2026

valvesgo.com