bürkert
FLUID CONTROL SYSTEMS

Servo-assisted 2/2-way piston valve

- Servo-assisted piston valve up to DN 50 orifice
- Safe opening with hard-coupled piston system without differential pressure
- Vibration-resistant, push-over coil system
- Explosion-proof variants
- Energy-saving double coil technology with Kick and Drop variant

Product variants described in the data sheet may differ from the product presentation and description.

Can be combined with

Type 2518
Cable plug,
form A according to
DIN EN 175301-803

Type 1087
Timer,
form A according to
DIN EN 175301-803

Type 2509
Cable plug,
form A according to
DIN EN 175301-803

Type description

The Type 6407 valve is a servo-assisted piston valve. The fix coupling between pilot valve and piston provides an opening of the valve without pressure difference. As a piston valve, the Type 6407 is particular suitable for media such as gas and steam. As well as liquids with low operating temperature below 0 °C.The stopper and the core guide pipe are welded together to enhance pressure resistance and leak-tightness. Various seal material combinations are available depending on the application. The coils are moulded with chemically resistant epoxy. To reduce power consumption in operation, coils with Kick and Drop electronics (double coil technology) are available. In combination with a plug acc. to DIN EN 175301-803 Form A, the valves satisfy IP65 degree of protection.

DTS 1000348453 EN Version: L Status: RL (released | freigegeben | valide) printed: 16.01.2026

© Christian Bürkert GmbH & Co. KG, Subject to alteration

valvesgo.com

Table of contents

1. General technical data 3

2. Circuit functions 4

3. Approvals and conformities 4

3.1. General notes 4
3.2. Conformity 4
3.3. Standards 4
3.4. Explosion protection 5
3.5. North America (USA/Canada) 5

4. Materials 6

4.1. Bürkert resistApp 6
4.2. Material specifications 6
Threaded body 6
Flange body 7

5. Dimensions 8

5.1. Standard variant DN 13...DN 32 8
5.2. Standard variant DN 50 10
5.3. ATEX/IECEx variant 11

6. Performance specifications 12

6.1. Power consumption 12

7. Product accessories 12

7.1. Cable glands for ATEX/IECEx terminal box 12
7.2. Special tool to turn the terminal box 13

8. Ordering information 13

8.1. Bürkert eShop 13
8.2. Bürkert product filter 13
8.3. Bürkert Product Enquiry Form 13
8.4. Standard variant DN 13...DN 32 14
Standard variant 14
Steam variant with valve seat in stainless steel 14
Steam variant with Kick and Drop coil (AC/DC) cURus (UL Recognized) coil approval 15
Steam variant with DC-coil cURus (UL Recognized) coil approval 15
8.5. Standard variant DN 50 15
Standard variant 15
Steam variant with valve seat in stainless steel 16
8.6. ATEX/IECEx cable variant 16
8.7. ATEX/IECEx terminal box variant 16
8.8. Ordering chart accessories 17
Cable plug Type 2518, form A according to DIN EN 175301 - 803 17
Cable plug Type 2509, form A according to DIN EN 175301 - 803 17
Cable glands for ATEX/IECEX terminal box 18

DTS 1000348453 EN Version: L Status: RL (released | freigegeben | valide) printed: 16.01.2026

valvesgo.com

valvesgo.com

1. General technical data

Product properties	
Dimensions	Further information can be found in chapter "5. Dimensions" on page 8.
Material	
Seal	PTFE and graphite
Body	Brass
Coil	Epoxy
Orifice	DN 13...DN 50
Circuit function	A Further information can be found in chapter "2. Circuit functions" on page 4.
Thermal insulation class of solenoid coil	Epoxy coil class H
Performance data	
Duty cycle	100 % continuous operation, Kick and Drop coil max. 6 switching cycles/minute
Switching time [1.)]	
DN 13	Opening: 30 ms Closing: 250 ms
DN 20	Opening: 30 ms Closing: 250 ms
DN 25	Opening: 60 ms Closing: 700 ms
DN 32	Opening: 80 ms Closing: 900 ms
DN 50	Opening: 500 ms Closing: 2000 ms
Electrical data	
Operating voltage	24 V DC, 24 V 50 Hz, 24 V 60 Hz, 110 V 50 Hz, 120 V 60 Hz, 230 V 50 Hz, 240 V 60 Hz (further voltages on request)
Power consumption	Further information can be found in chapter "6.1. Power consumption" on page 12.
Voltage tolerance	± 10 %
Medium data	
Operating medium	Neutral gases and liquids (e.g. compressed air, water, hydraulic oil, hot water and steam)
Medium temperature	
Standard variant	PTFE and graphite: - 40 °C...+ 150 °C PTFE and FKM: - 10 °C...+ 120 °C
Steam variant	PTFE and graphite: 0 °C...+ 150 °C (+ 180 °C for AC 12/13 Watt on request) PTFE and FKM: 0 °C...+ 120 °C
Explosion-proof variant	PTFE and graphite: - 40 °C...+ 120 °C PTFE and FKM: - 10 °C...+ 120 °C
Viscosity	Max. 21 mm^2/s (21 cSt)
Product connections	
Electrical connection	• Plug contacts according to DIN EN 175 301 - 803 form A for cable plug **Type 2518** ▶. Further information can be found in chapter "Cable plug Type 2518, form A according to DIN EN 175301 - 803" on page 17. • Plug contacts according to DIN EN 175 301 - 803 form A for cable plug **Type 2509** ▶. Further information can be found in chapter "Cable plug Type 2509, form A according to DIN EN 175301 - 803" on page 17.
Port connection	G ½, G ¾, G 1, G 1 ¼, G 1 ½, G 2, G 2 ½ NPT ½, NPT ¾, NPT 1, NPT 1 ¼, NPT 1 ½, NPT 2
Approvals and conformities	
Degree of protection	IP65 with cable plug
Explosion protection	Further information can be found in chapter "3.4. Explosion protection" on page 5.
North America (USA/Canada)	Further information can be found in chapter "3.5. North America (USA/Canada)" on page 5.

DTS 1000348453 EN Version: L Status: RL (released | freigegeben | valide) printed: 16.01.2026

valvesgo.com

Environment and installation	
Installation position	As required, preferably with actuator upright
Ambient temperature	
Standard variant	PTFE + graphite: - 40 °C...+ 45 °C PTFE + FKM: - 10 °C...+ 55 °C
Steam variant	PTFE + graphite: 0 °C...+ 45 °C (+ 55 °C on request) PTFE + FKM: 0 °C...+ 55 °C
Explosion-proof variant	- 10 °C...+ 40 °C

1.) Measurement at + 20 °C, 6 bar at the valve outlet, opening: pressure build-up 0...90 %, closing: pressure reduction 100...10 %

2. Circuit functions

Symbol	Description
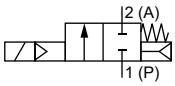	**Circuit function A (CF A)** 2/2-way solenoid valve Servo-controlled Normally closed

3. Approvals and conformities

3.1. General notes

- The approvals and conformities listed below must be stated when making enquiries. This is the only way to ensure that the product complies with all required specifications.
- Not all available variants can be supplied with the below mentioned approvals or conformities.

3.2. Conformity

In accordance with the Declaration of Conformity, the product is compliant with the EU Directives.

3.3. Standards

The applied standards which are used to demonstrate compliance with the EU Directives are listed in the EU-Type Examination Certificate and/or the EU Declaration of Conformity.

DTS 1000348453 EN Version: L Status: RL (released | freigegeben | valide) printed: 16.01.2026

valvesgo.com

valvesgo.com

3.4. Explosion protection

Approval	Description
	Optional: Explosion protection according to category 2 (zone 1/21) Ex marking of the components according to the following table:

Coil Type AC19	
Coil with cable outlet	**Coil with terminal box**
ATEX: EPS 16 ATEX 1072 X II 2G Ex mb IIC T4 Gb II 2D Ex mb IIIC T130 °C Db **IECEx:** IECEx EPS 16.0030 X II 2G Ex mb IIC T4 Gb II 2D Ex mb IIIC T130 °C Db	**ATEX:** EPS 16 ATEX 1072 X II 2G Ex eb mb IIC T4 Gb II 2D Ex mb tb IIIC T130 °C Db **IECEx:** IECEx EPS 16.0030 X II 2G Ex eb mb IIC T4 Gb II 2D Ex mb tb IIIC T130 °C Db

Optional: Explosion protection according to category 3 (zone 2/22)

Ex marking of the components according to the following table:

Coil Type AC19
Coil with plug contacts form A and cable plug Type 2509
ATEX: EPS 16 ATEX 1072 X II 2G Ex mb IIC T4 Gb II 2D Ex mb IIIC T130 °C Db **IECEx:** IECEx EPS 16.0030 X II 2G Ex mb IIC T4 Gb II 2D Ex mb IIIC T130 °C Db

3.5. North America (USA/Canada)

Approval	Description
LISTED	**Optional: UL Listed for the USA (valid for valves)** The valves are UL Listed for the USA according to: • UL 429 (electrically operated valves)
c UL us LISTED SOLENOID FOR USE IN HAZARDOUS LOCATIONS E504714	**Optional: UL Hazardous Locations – Explosion Protection (valid for coils)** UL Listed for Hazardous Locations for USA and Canada Class I, Zone 1 Class I, Division 2, Group A, B, C and D Class II + III, Division 2, Group F and G
	Optional: UL Recognized for the USA (valid for valves) The valves are UL Recognized for the USA according to: • UL 429 (electrically operated valves)

DTS 1000348453 EN Version: L Status: RL (released | freigegeben | valide) printed: 16.01.2026

valvesgo.com

valvesgo.com

4. Materials

4.1. Bürkert resistApp

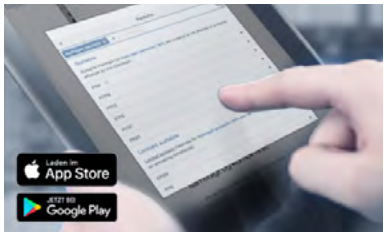

Bürkert resistApp – Chemical resistance chart

You want to ensure the reliability and durability of the materials in your individual application case? Verify your combination of media and materials on our website or in our resistApp.

Start chemical resistance check

4.2. Material specifications

Threaded body

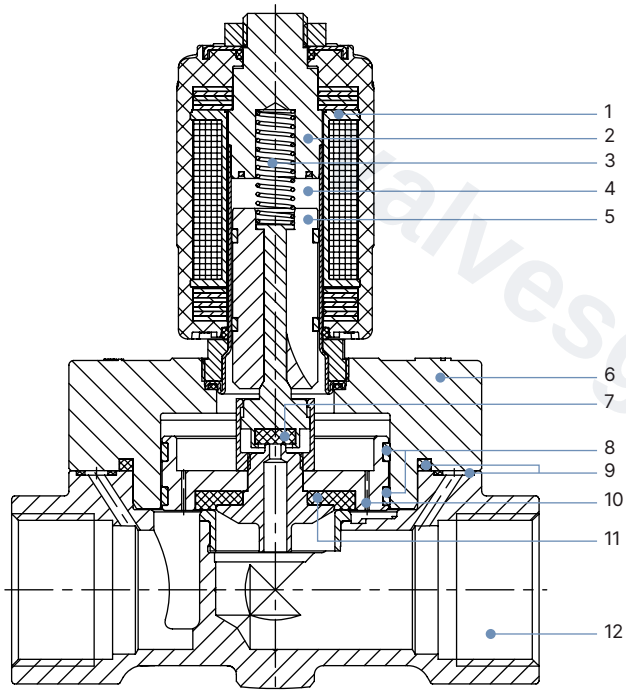

No.	Element	Material
1	Coil	Epoxy
2	Stopper	Stainless steel 1.4113/434 1.)
3	Spring	Stainless steel 1.4310/301 1.)
4	Armature guide tube	Stainless steel 1.4303/305 1.)/308 1.)
5	Core	Stainless steel 1.4113/434 1.)
6	Cover	Brass
7	Seal	PTFE
8	Piston ring	PTFE
9	Sealing ring	Graphite
10	Plunger	Brass
11	Piston seal	PTFE
12	Body	Brass

1.) Material designation according to AISI

DTS 1000348453 EN Version: L Status: RL (released | freigegeben | valide) printed: 16.01.2026

valvesgo.com

Flange body

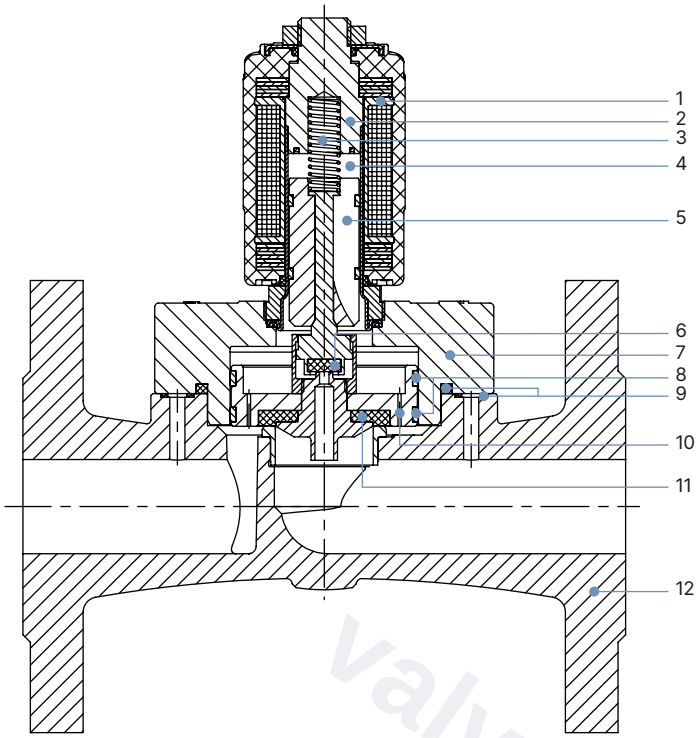

No.	Element	Material
1	Coil	Epoxy
2	Stopper	Stainless steel 1.4113/434 [1.)]
3	Spring	Stainless steel 1.4310/301 [1.)]
4	Armature guide tube	Stainless steel 1.4303/305 [1.)]/308 [1.)]
5	Core	Stainless steel 1.4113/434 [1.)]
6	Seal	PTFE
7	Cover	Brass
8	Piston ring	PTFE
9	Sealing ring	Graphite
10	Plunger	Brass
11	Piston seal	PTFE
12	Body	Stainless steel 1.4581/similar 316Ti [1.)]

1.) Material designation according to AISI

DTS 1000348453 EN Version: L Status: RL (released | freigegeben | valide) printed: 16.01.2026

valvesgo.com

valvesgo.com

5. Dimensions

5.1. Standard variant DN 13...DN 32

Note:

- Dimensions in mm
- The dimensions D1 and F1 apply to G thread.
- The dimensions D2 and F2 apply to NPT thread.
- The dimensions D3 and F3 apply to Rc thread.

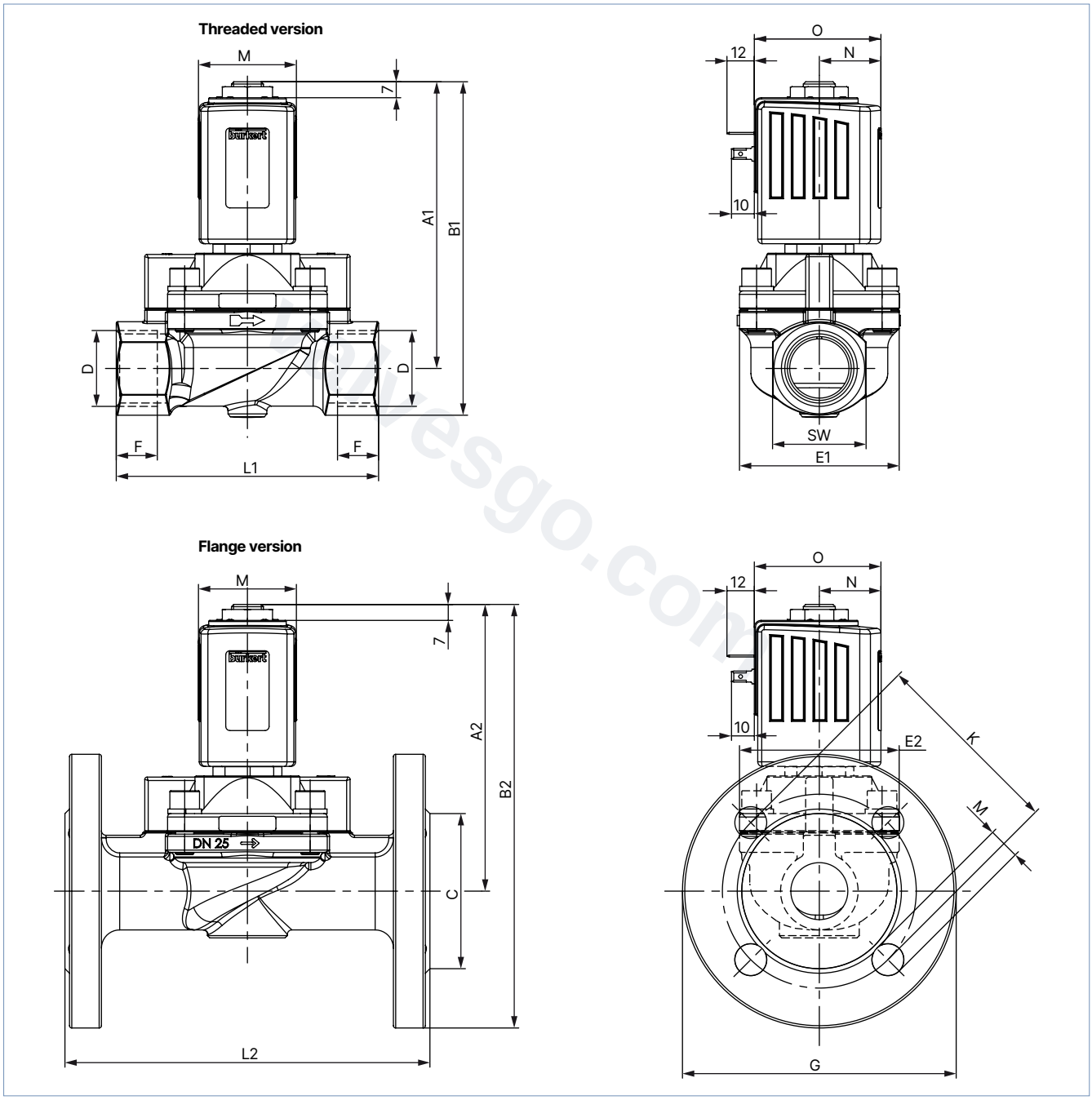

Coil size	M	N	O
K	42	27	55.5
L	65	37.5	72

DTS 1000348453 EN Version: L Status: RL (released | freigegeben | valide) printed: 16.01.2026

valvesgo.com

DN	Threaded variant in brass											Flange variant in stainless steel							
	A1	B1	G thread		NPT thread		Rc thread		E1	L1	SW	A2	B2	C	E2	G	L2	M	K
			D1	F1	D2	F2	D3	F3											
13	118.7	132.7	–	–	–	–	Rc ⅜	10.1	40	65	27	–	–	–	–	–	–	–	–
13			G ½	14	NPT ½	13.7	Rc ½	13.2						–	–	–	–	–	–
20	119.7	135.7	G ¾	16	NPT ¾	14.0	Rc ¾	14.5	60	100	32	–	–	–	–	–	–	–	–
25	125.7	146.2	G 1	18	NPT 1	16.8	Rc 1	16.8	70	115	41	129.7	189.7	68	73	120	160	14	85
32	142.7	167.7	G 1¼	20	NPT 1¼	17.3	Rc 1¼	19.1	85	126	50	142.7	212.7	78	85	140	180	18	100
32	146.7	176.7	G 1½	22	NPT 1½	17.3	Rc 1½	19.1	85	126	60	146.7	221.7	88	85	150	200	18	110

DTS 1000348453 EN Version: L Status: RL (released | freigegeben | valide) printed: 16.01.2026

valvesgo.com

valvesgo.com

5.2. Standard variant DN 50

Note:

- Dimensions in mm
- The dimensions D1 and F1 apply to G thread.
- The dimensions D2 and F2 apply to NPT thread.
- The dimensions D3 and F3 apply to Rc thread.

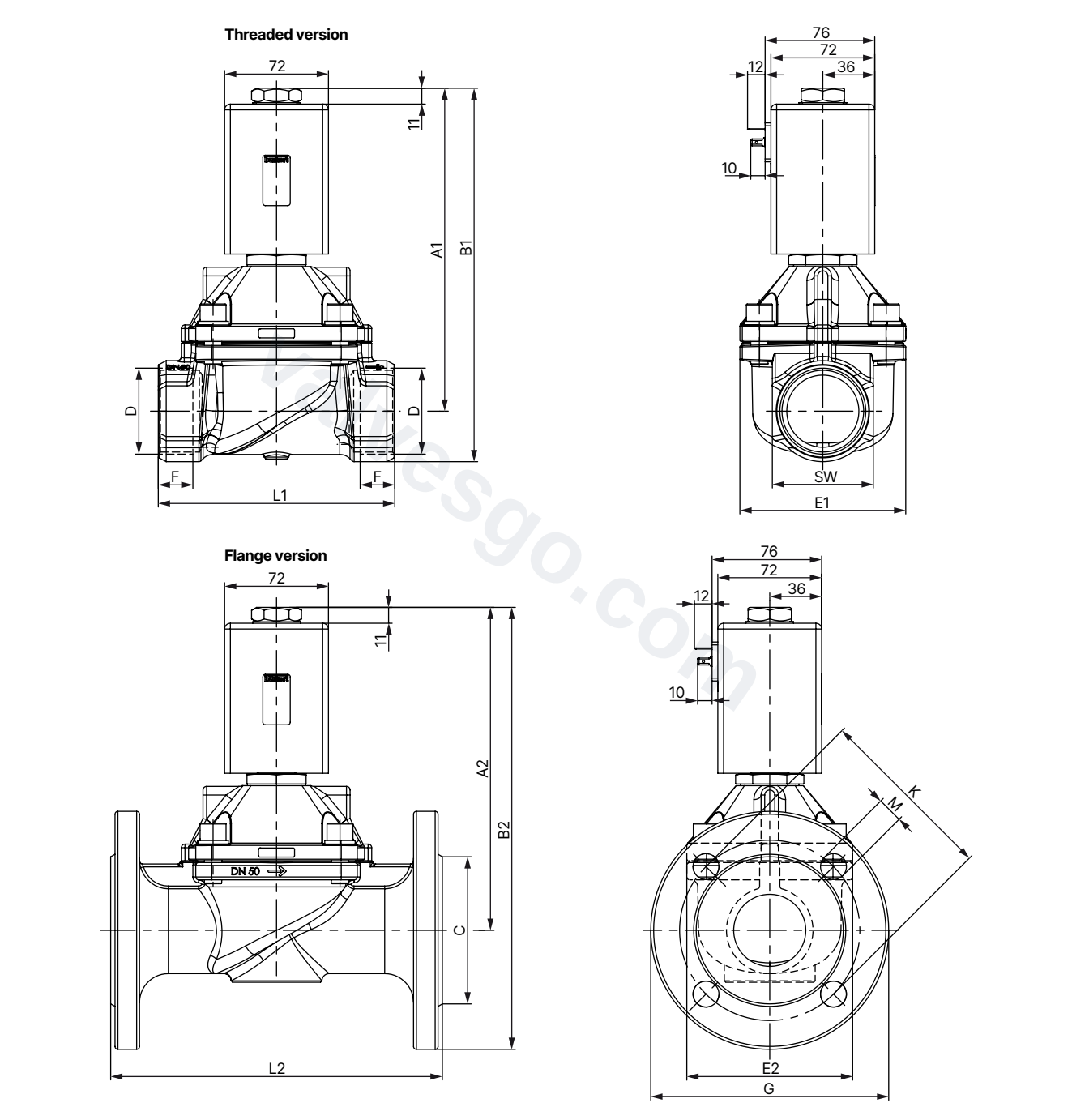

DN	Threaded variant in brass											Flange variant in stainless steel							
	A1	B1	G thread		NPT thread		Rc thread		E1	L1	SW	A2	B2	C	E2	G	L2	M	K
			D1	F1	D2	F2	D3	F3											
50	223.75	258.75	G 2	24	NPT 2	17.6	Rc 2	23.4	115	164	70	223.45	305.95	102	115	165	230	18	125
	223.45	223.45	G 2½	27	NPT 2½	23.6	–	13.2		179	85	–	–	–	–	–	–	–	–

DTS 1000348453 EN Version: L Status: RL (released | freigegeben | valide) printed: 16.01.2026

valvesgo.com

5.3. ATEX/IECEx variant

Note:

- Dimensions in mm
- The dimensions D1 and F1 apply to G thread.
- The dimensions D2 and F2 apply to NPT thread.
- The dimensions D3 and F3 apply to Rc thread.

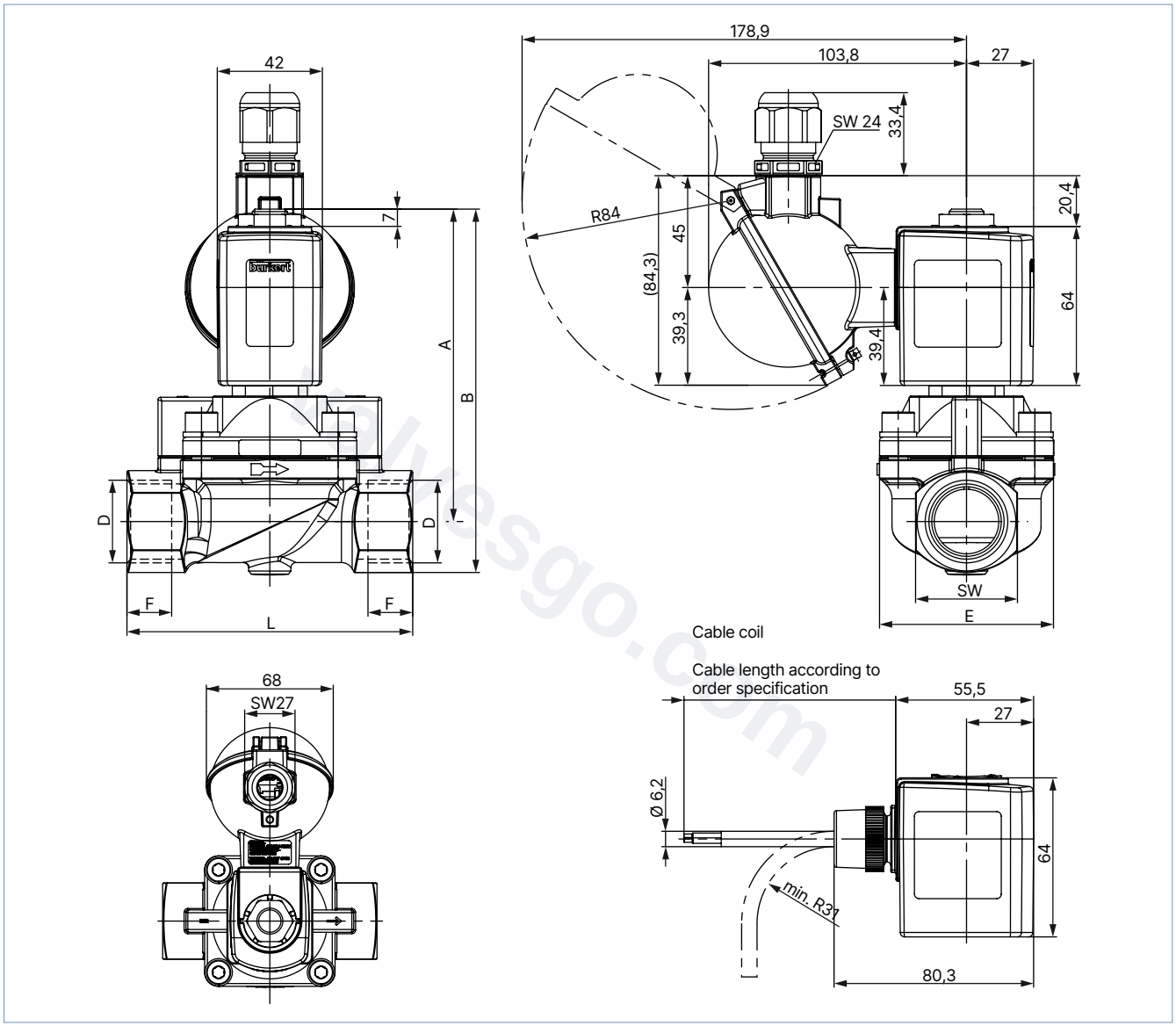

Coil size	M	N	O	P	R	S
K	42	27	55.5	80.3	104.8	179.8
L	65	37.5	72	97	110.8	185.8

DN	A	B	G thread		NPT thread		Rc thread		E	L	SW
			D1	F1	D2	F2	D3	F3			
13	118.7	132.7	–	–	–	–	Rc ⅜	10.1	40	65	27
13			G ½	14	NPT ½	13.7	Rc ½	13.2			
20	119.7	135.7	G ¾	16	NPT ¾	14.0	Rc ¾	14.5	60	100	32
25	125.7	146.2	G 1	18	NPT 1	16.8	Rc 1	16.8	70	115	41

DTS 1000348453 EN Version: L Status: RL (released | freigegeben | valide) printed: 16.01.2026

valvesgo.com

6. Performance specifications

6.1. Power consumption

Note:
The Kick and Drop coil (AC/DC) features integrated electronics for short-term power increase and decrease in double coil technology.

Orifice	Coil size	AC			DC		Kick and Drop coil (AC/DC)			AC with external rectifier
		Inrush power	Holding power		Cold power	Warm power	Cold power Inrush power	Cold power Holding power	Warm power Holding power	Nominal power
[mm]	[mm]	[VA]	[VA]	[W]	[W]	[W]	[W] 500 ms	[W]	[W]	[W]
13	42	140	41	16	21	16	85	8.5	7	–
13 ATEX	42	–	–	–	15	12	–	–	–	–
20	42	150	41	16	–	–	85	8.5	7	–
25	42	160	41	16	–	–	85	8.5	7	–
32	42	170	41	16	–	–	85	8.5	7	–
20...25 ATEX	42	–	–	–	–	–	44	6.5	5.5	–
20...32	65	–	–	–	28	21	–	–	–	–
50	72	–	–	–	39	30	–	–	–	45

7. Product accessories

7.1. Cable glands for ATEX/IECEx terminal box

Note:
A polyamide cable gland is included in the scope of delivery. A nickel-plated brass variant can be ordered for a surcharge, see **"Cable glands for ATEX/IECEX terminal box" on page 18**.

Description	Ex approval		Dimensions	
	Certification	Identification		
Ex cable gland, nickel-plated brass, 6...13 mm 	PTB 04 ATEX 1112 X, IECEx PTB 13.0027X	II 2 G Ex e IIC Gb, II 2 D Ex tb IIIC Db IP68	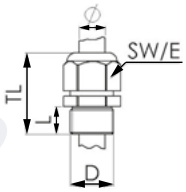	TL 29...37 mm L 6 mm D 20 mm SW 24 mm E 27 mm
Ex cable gland, polyamide, 7...13 mm 	PTB 13 ATEX 1015 X, IECEx PTB 13.0034X	II 2 G Ex e IIC Gb, II 2 D Ex tb IIIC Db IP68	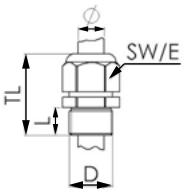	TL 36...45 mm L 10 mm D 20 mm SW 24 mm E 28 mm

DTS 1000348453 EN Version: L Status: RL (released | freigegeben | valide) printed: 16.01.2026

valvesgo.com

7.2. Special tool to turn the terminal box

Note:
This special tool is not included in the scope of delivery of the valve, see "Cable glands for ATEX/IECEX terminal box" on page 18.

Description	Components of the set
Set SC02-AC10 	• Special tool • Service manual

8. Ordering information

8.1. Bürkert eShop

Bürkert eShop – Easy ordering and quick delivery

You want to find your desired Bürkert product or spare part quickly and order directly? Our online shop is available for you 24/7. Sign up and enjoy all the benefits.

Order online now

8.2. Bürkert product filter

Bürkert product filter – Get quickly to the right product

You want to select products comfortably based on your technical requirements?
Use the Bürkert product filter and find suitable articles for your application quickly and easily.

Try out our product filter

8.3. Bürkert Product Enquiry Form

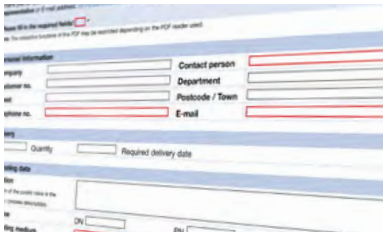

Bürkert Product Enquiry Form – Your enquiry quickly and compactly

Would you like to make a specific product enquiry based on your technical requirements? Use our Product Enquiry Form for this purpose. There you will find all the relevant information for your Bürkert contact. This will enable us to provide you with the best possible advice.

Fill out the form now

DTS 1000348453 EN Version: L Status: RL (released | freigegeben | valide) printed: 16.01.2026

valvesgo.com

8.4. Standard variant DN 13...DN 32

Standard variant

Circuit function	Port connection	Orifice	K_V value water 1.)	Pressure range 2.)	Max. medium temperature	Coil size	Article no.		
							024/DC	024/50	230/50
		[mm]	[m³/h]	[bar]	[°C]	[mm]	[V/Hz]	[V/Hz]	[V/Hz]
Brass body, seal material PTFE/graphite									
CF A 2/2-way solenoid valve Servo-controlled Normally closed 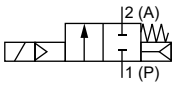	G ½	13	3.7	0...10	150	42	332166	332164	332165
	G ¾	20	5.6	0...10	150	42	–	332167	332168
						65	332169	–	–
	G 1	25	10.0	0...10	150	42	–	332170	332172
						65	332171	–	–
	G 1¼	32	16.0	0...10	150	42	–	332173	332174
						65	332176	–	–
	G 1½	32	16.0	0...10	150	42	–	332177	332178
						65	332179	–	–

– = not available
1.) Measurement at + 20 °C, 1 bar 2.) at the valve inlet and free outlet
2.) Pressure data: overpressure to atmospheric pressure

Steam variant with valve seat in stainless steel

Circuit function	Port connection	Orifice	K_V value water 1.)	Pressure range 2.)	Max. medium temperature	Coil size	Article no.		
							024/DC	024/50	230/50
		[mm]	[m³/h]	[bar]	[°C]	[mm]	[V/Hz]	[V/Hz]	[V/Hz]
Brass body, seal material PTFE/graphite									
CF A 2/2-way solenoid valve Servo-controlled Normally closed 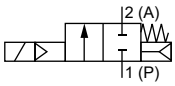	G ½	13	3.7	0...10	150	42	320877	320859	320856
					180	65	–	20032730	20015465
	G ¾	20	5.6	0...10	150	42	–	320861	320857
						65	320878	–	–
					180	65	–	20032731	20015466
	G 1	25	10.0	0...10	150	42	–	320862	320858
						65	320879	–	–
					180	65	–	20032732	20015467
	Flange acc. to DIN EN 1902 - 1	25	10.0	0...10	150	42	–	369641	357372
						65	379382	–	–
					180	65	–	20032733	20032736
	G 1¼	32	16.0	0...10	150	42	–	330406	330401
						65	330420	–	–
	Flange acc. to DIN EN 1902 - 1	32	16.0	0...10	150	42	–	363054	363047
						65	363048	–	–
	G 1½	32	16.0	0...10	150	42	–	330427	330429
						65	330435	–	–
	Flange acc. to DIN EN 1902 - 1 with DN 40	32	16.0	0...10	150	42	–	20032737	363049
						65	363050	–	–

– = not available
1.) Measurement at + 20 °C, 1 bar 2.) at the valve inlet and free outlet
2.) Pressure data: overpressure to atmospheric pressure

DTS 1000348453 EN Version: L Status: RL (released | freigegeben | valide) printed: 16.01.2026

valvesgo.com

Steam variant with Kick and Drop coil (AC/DC) cURus (UL Recognized) coil approval

Circuit function	Port connection	Orifice	K_V value water 1.)	Pressure range 2.)	Max. medium temperature	Coil size	Article no.		
							024 / AC/ DC	110...120/ AC 3.)	230...240/ AC 3.)
		[mm]	[m³/h]	[bar]	[°C]	[mm]	[V/Hz]	[V/Hz]	[V/Hz]
Brass body, seal material PTFE/graphite									
CF A 2/2-way solenoid valve Servo-controlled Normally closed 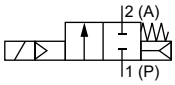	NPT ½	13	3.7	0...10	150	42	320874	320863	320866
	NPT ¾	20	5.6	0...10	150	42	320875	320864	320867
	NPT 1	25	10.0	0...10	150	42	320876	320865	320868
	NPT 1¼	32	16.0	0...10	150	42	330421	330425	330426
	NPT 1½	32	16.0	0...10	150	42	330442	330443	330444

1.) Measurement at + 20 °C, 1 bar 2.) at the valve inlet and free outlet
2.) Pressure data: overpressure to atmospheric pressure
3.) AC indicates 50 Hz or 60 Hz

Steam variant with DC-coil cURus (UL Recognized) coil approval

Circuit function	Port connection	Orifice	K_V value water 1.)	Pressure range 2.)	Max. medium temperature	Coil size	Article no.
							024/DC
		[mm]	[m³/h]	[bar]	[°C]	[mm]	[V/Hz]
Brass body, seal material PTFE/graphite							
CF A 2/2-way solenoid valve Servo-controlled Normally closed 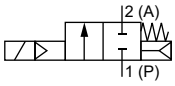	NPT ½	13	3.7	0...10	140	42	324978
	NPT ¾	20	5.6	0...10	140	65	324979
	NPT 1	25	10.0	0...10	140	65	324980
	NPT 1¼	32	16.0	0...10	140	65	332519
	NPT 1½	32	16.0	0...10	140	65	332520

1.) Measurement at + 20 °C, 1 bar 2.) at the valve inlet and free outlet
2.) Pressure data: overpressure to atmospheric pressure

8.5. Standard variant DN 50

Standard variant

Circuit function	Port connection	Orifice	K_V value water 1.)	Pressure range 2.)	Max. medium temperature	Coil size	Article no.	
							024/DC	230 / AC/DC 3.)
		[mm]	[m³/h]	[bar]	[°C]	[mm]	[V/Hz]	[V/Hz]
Brass body, seal material PTFE/graphite								
CF A 2/2-way solenoid valve Servo-controlled Normally closed 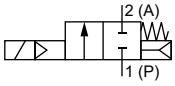	G 2	50	36.0	0...10	150	72	332162	332163
	G 2½	50	36.0	0...10	150	72	332160	332161

1.) Measurement at + 20 °C, 1 bar 2.) at the valve inlet and free outlet
2.) Pressure data: overpressure to atmospheric pressure
3.) A cable plug with rectifier is included in the scope of delivery.

DTS 1000348453 EN Version: L Status: RL (released | freigegeben | valide) printed: 16.01.2026

valvesgo.com

Steam variant with valve seat in stainless steel

Circuit function	Port connection	Orifice	K_v value water 1.)	Pressure range 2.)	Max. medium temperature	Coil size	Article no.	
							024/DC	230 / AC/DC 3.)
		[mm]	[m³/h]	[bar]	[°C]	[mm]	[V/Hz]	[V/Hz]
Brass body, seal material PTFE/graphite								
CF A 2/2-way solenoid valve Servo-controlled Normally closed 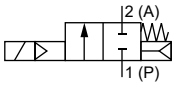	G 2	50	36.0	0...10	150	72	332149	332156

1.) Measurement at + 20 °C, 1 bar 2.) at the valve inlet and free outlet
2.) Pressure data: overpressure to atmospheric pressure
3.) A cable plug with rectifier is included in the scope of delivery.

8.6. ATEX/IECEx cable variant

Circuit function	Port connection	Orifice	K_v value water 1.)	Pressure range 2.)	Max. medium temperature	Coil size	Article no.	
							024 / AC/DC	230/AC
		[mm]	[m³/h]	[bar]	[°C]	[mm]	[V/Hz]	[V/Hz]
Brass body, seal material PTFE/FKM								
CF A 2/2-way solenoid valve Servo-controlled Normally closed 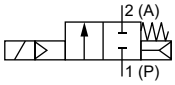	G ½	13	3.7	0...10	90	42	380853	380855
	G ¾	20	5.6	0...10	90	65	380857	380860
	G 1	25	10	0...10	90	65	380864	380866

1.) Measurement at + 20 °C, 1 bar 2.) at the valve inlet and free outlet
2.) Pressure data: overpressure to atmospheric pressure

8.7. ATEX/IECEx terminal box variant

Circuit function	Port connection	Orifice	K_v value water 1.)	Pressure range 2.)	Max. medium temperature	Coil size	Article no.	
							024 / AC/DC	230/AC
		[mm]	[m³/h]	[bar]	[°C]	[mm]	[V/Hz]	[V/Hz]
Brass body, seal material PTFE/FKM								
CF A 2/2-way solenoid valve Servo-controlled Normally closed 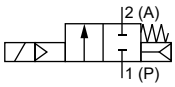	G ½	13	3.7	0...10	90	42	380852	380854
	G ¾	20	5.6	0...10	90	65	380856	380859
	G 1	25	10	0...10	90	65	380863	380865

1.) Measurement at + 20 °C, 1 bar 2.) at the valve inlet and free outlet
2.) Pressure data: overpressure to atmospheric pressure

DTS 1000348453 EN Version: L Status: RL (released | freigegeben | valide) printed: 16.01.2026

valvesgo.com

Further variants on request			
	Approval • UL Listed • UL Recognized • UL Listed for Hazardous Locations for USA and Canada • ATEX/IECEx		**Voltage** Further voltages on request
	Process connection • NPT • RC • Flange body acc. to DIN EN 1902 - 1		**Temperature** Special temperature ranges

8.8. Ordering chart accessories

Cable plug Type 2518, form A according to DIN EN 175301 - 803

Note:
- Dimensions in mm
- For further variants see data sheet **Type 2518** ▸.

Cable plug	Dimensions	Variant	Voltage	Article no.
	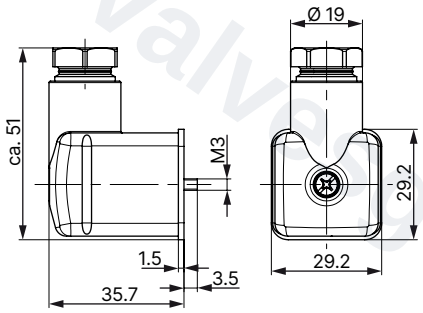	Without wiring (AC/DC)	0...250 V AC/DC	314802
		With LED (AC/DC)	12...24 V AC/DC	314812
		With LED and varistor (AC/DC)	12...24 V AC/DC	314820
		With rectifier, LED and varistor	12...24 V AC/DC	314816

Cable plug Type 2509, form A according to DIN EN 175301 - 803

Note:
- Dimensions in mm
- Without wiring (standard)
- The cable plug Type 2509 meets the requirements of ATEX Cat. 3 GD in assembly with a Bürkert solenoid valve.
- The cable plug Type 2509 meets the requirements of UL Listed (UL 429) in assembly with a Bürkert solenoid valve.
- Refer to data sheet **Type 2509** ▸ for more information about the cable plug.

Cable plug	Dimensions	Variant	Voltage	Article no.
	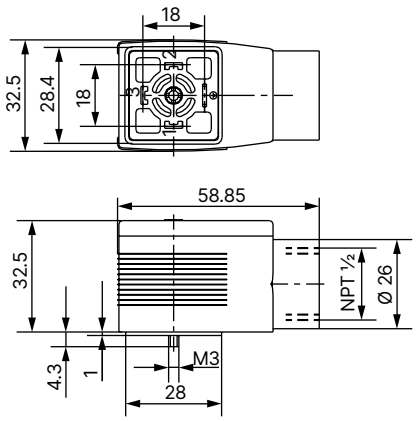	Without wiring	0...250 V AC/DC	137943

DTS 1000348453 EN Version: L Status: RL (released | freigegeben | valide) printed: 16.01.2026

valvesgo.com

Cable glands for ATEX/IECEX terminal box

Note:

- A polyamide cable gland is included in the scope of delivery. A nickel-plated brass variant can be ordered for a surcharge.
- Refer to "7.1. Cable glands for ATEX/IECEx terminal box" on page 12 for more information about Ex cable glands.
- Refer to "7.2. Special tool to turn the terminal box" on page 13 for more information about special tool.

Description	Article no.
Ex cable gland, nickel-plated brass, 6...13 mm [1.)]	773278
Ex cable gland, polyamide, 7...13 mm [1.)]	773277
Set SC02-AC10: special tool [2.)] incl. service manual	293488

1.) Cable diameter
2.) Not included in the scope of delivery of the valve

DTS 1000348453 EN Version: L Status: RL (released | freigegeben | valide) printed: 16.01.2026

valvesgo.com

valvesgo.com