bürkert
FLUID CONTROL SYSTEMS

Direct-acting 2/2-way plunger valve

- Direct-acting and compact valve up to DN 6.0
- Vibration-proof, bolted coil system
- Explosion-proof variants
- Energy-saving 'Kick and Drop' models available

Product variants described in the data sheet may differ from the product presentation and description.

Can be combined with

Type 1087
Timer,
form A according to
DIN EN 175301-803

Type 2518
Cable plug,
form A according to
DIN EN 175301-803

Type 2509
Cable plug,
form A according to
DIN EN 175301-803

Type description

Valve Type 6013 is a direct-acting plunger valve. The stopper and the core guide tube are welded together to increase pressure resistance and leak-tightness. A variety of seal material combinations are available to suit different applications. A Bürkert-specific flange variant (SFB) enables the space-saving arrangement of valves on a multiple manifold.Kick and drop coils are available to reduce electrical power consumption during operation.

valvesgo.com

DTS 1000010716 EN Version: - Status: RL (released | freigegeben | valide) printed: 01.10.2026

© Christian Bürkert GmbH & Co. KG, subject to change without notice

valvesgo.com

Table of contents

1. General technical data 4

1.1. Standard variant 4
1.2. Analytical variant 5
1.3. DVGW variant 5

2. Circuit functions 5

3. Approvals and conformities 6

3.1. General notes 6
3.2. Conformity 6
3.3. Standards 6
3.4. Explosion protection 6
3.5. North America (USA/Canada) 7
3.6. Drinking water 7
3.7. Foods and beverages/Hygiene 7
3.8. Others 8
Fuel gases 8

4. Materials 8

4.1. Bürkert resistApp 8
4.2. Material specifications 8
Standard variant 8
ATEX/IECEx cable variant 9
ATEX/IECEx terminal box variant 10

5. Dimensions 11

5.1. Standard variant 11
5.2. ATEX/IECEx cable variant 12
5.3. ATEX/IECEx terminal box variant 13
5.4. Single manifold 14
5.5. Multiple manifold 15
5.6. Manifolds for block mounting 15

6. Performance specifications 16

6.1. Power consumption 16
Circuit function A 16
Circuit function B 16

7. Product installation 17

7.1. Installation notes 17
Control for impulse variant with polarity reversal control 17

8. Product accessories 18

8.1. Cable glands for ATEX/IECEx terminal box 18
8.2. Special tool to turn the terminal box 18

DTS 1000010716 EN Version: - Status: RL (released | freigegeben | valide) printed: 01.10.2026

valvesgo.com

valvesgo.com

9. Ordering information 19

9.1. Bürkert eShop ... 19
9.2. Bürkert product filter ... 19
9.3. Bürkert Product Enquiry Form ... 19
9.4. Ordering chart ... 20
Standard variant ... 20
Impulse variant ... 21
Analytical variant ... 22
DVGW variant ... 22
ATEX/IECEx cable variant ... 23
ATEX/IECEx terminal box variant ... 23
9.5. Ordering chart accessories ... 24
Singel manifold ... 24
Multiple manifold ... 24
Cable plug Type 2518, form A according to DIN EN 175301 - 803 ... 24
Cable plug Type 2509, form A according to DIN EN 175301 - 803 ... 25
Cable glands for ATEX/IECEx terminal box ... 25

DTS 1000010716 EN Version: - Status: RL (released | freigegeben | valide) printed: 01.10.2026

valvesgo.com

valvesgo.com

1. General technical data

1.1. Standard variant

Product properties	
Dimensions	Further information can be found in chapter "5. Dimensions" on page 11.
Material	
Seal	FKM, PTFE/Graphite (EPDM on request)
Body	Brass, stainless steel 1.4305/303
Coil	Polyamide, epoxy
Orifice	DN 2.0...DN 6.0
Circuit function	A and B Further information can be found in chapter "2. Circuit functions" on page 5.
Thermal insulation class of solenoid coil	Polyamide coil class B Epoxy coil class H
Performance data	
Duty cycle/single valve with block assembly on manifold	100 % continuous operation Intermittent operation 60 % (30 min) or with 5 W coil (on request)
Electrical data	
Operating voltage	
Standard variant	24 V DC, 24 V 50 Hz, 24 V 60 Hz, 120 V 50 Hz, 230 V 50 Hz, 240 V 60 Hz
Analytical variant	24 V DC, 230 V 50 Hz (other voltages on request)
Power consumption	Further information can be found in chapter "6. Performance specifications" on page 16.
Voltage tolerance	± 10 %
Medium data	
Operating medium	
Standard variant	Technical vacuum, neutral gases and liquids (e.g. compressed air, water, hydraulic oil)
Analytical variant	Neutral medium which do not attack the body and seal materials Further information can be found in chapter "4.1. Bürkert resistApp" on page 8.
Medium temperature	
With FKM	- 10 °C...+ 100 °C (PA coil), - 10 °C...+ 120 °C (Epoxy coil), - 40 °C on request
With PTFE/Graphite	- 40 °C...+ 180 °C (further information can be found in chapter "4.1. Bürkert resistApp" on page 8)
With FKM, circuit function B	- 10 °C...+ 100 °C (AC), - 10 °C...+ 120 °C (DC)
Viscosity	Max. 21 mm²/s
Product connections	
Electrical connection	• Plug contacts according to DIN EN 175301 - 803 form A for cable plug **Type 2518** ▸. Further information can be found in chapter "Cable plug Type 2518, form A according to DIN EN 175301 - 803" on page 24. • Plug contacts according to DIN EN 175301 - 803 form A for cable plug **Type 2509** ▸. Further information can be found in chapter "Cable plug Type 2509, form A according to DIN EN 175301 - 803" on page 25. • ATEX/IECEx variant with 3 m moulded cable or terminal cable
Port connection	
Standard variant	G ⅛, G ¼, G ⅜, NPT ⅛, NPT ¼, NPT ⅜, manifold (SFB)
Analytical variant	G ⅛, G ¼, NPT ⅛, NPT ¼
Approvals and conformities	
Degree of protection	IP65 with cable plug
Explosion protection	Further information can be found in chapter "3.4. Explosion protection" on page 6.
North America (USA/Canada)	Further information can be found in chapter "3.5. North America (USA/Canada)" on page 7.
Environment and installation	
Installation position	As required, preferably with actuator upright
Ambient temperature	Max. + 55 °C (higher temperatures on request)

DTS 1000010716 EN Version: - Status: RL (released | freigegeben | valide) printed: 01.10.2026

valvesgo.com

1.2. Analytical variant

This variant is particularly suitable for switching from extremely pure gaseous medium. All medium-affected parts are submitted to additional purification processes, so that the medium is not contaminated under any circumstances.

The tightness test takes place at the Helium leak detector from a min. of 10^{-4} mbar l/sec.

Product properties	
Material	
Seal	Silicon, oil and fat free variant Tightness < 10^{-4} mbar l/s
Body	Brass, stainless steel 1.4305/303
Medium data	
Operating medium	Neutral medium, which does not attack the body and seal materials Further information can be found in chapter "4.1. Bürkert resistApp" on page 8.
Environment and installation	
Installation instructions	No oils, fats or silicone to be used during installation.

1.3. DVGW variant

The solenoid valve Type 6013 DVGW is primarily intended as an automatic safety shut-off valve for fuel gases. A strainer is installed in the inlet of the valve.

Product properties	
Material	
Seal	NBR
Body	Brass, stainless steel 1.4305/303
Circuit function	A Further information can be found in chapter "2. Circuit functions" on page 5.
Performance data	
Operating pressure	Max. 0...5 bar
Medium data	
Operating medium	Fuel gases (e.g. town gas, district gas, liquid gas) Further information can be found in chapter "4.1. Bürkert resistApp" on page 8.
Medium temperature	- 20 °C...+ 80 °C
Approvals and conformities	
Standards	DIN EN 161:2013, DIN EN 13611:2016
Environment and installation	
Ambient temperature	- 20 °C...+ 55 °C

2. Circuit functions

Symbol	Description
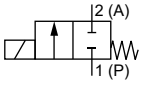	**Circuit function A (CF A)** 2/2-way solenoid valve Direct-acting Normally closed
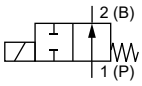	**Circuit function B (CF B)** 2/2-way solenoid valve Direct-acting Normally open

DTS 1000010716 EN Version: - Status: RL (released | freigegeben | valide) printed: 01.10.2026

valvesgo.com

3. Approvals and conformities

3.1. General notes

- The approvals and conformities listed below must be stated when making enquiries. This is the only way to ensure that the product complies with all required specifications.
- Not all available variants can be supplied with the below mentioned approvals or conformities.

3.2. Conformity

In accordance with the Declaration of Conformity, the product is compliant with the EU Directives.

3.3. Standards

The applied standards which are used to demonstrate compliance with the EU Directives are listed in the EU-Type Examination Certificate and/or the EU Declaration of Conformity.

3.4. Explosion protection

<table>
<tr><th>Approval</th><th>Description</th></tr>
<tr><td></td><td>
Optional: Explosion protection according to category 2 (zone 1/21)

Ex marking of the components according to the following table:
<table>
<tr><th colspan="2">Coil Type AC10</th></tr>
<tr><th>Coils with cable outlet</th><th>Coils with terminal box</th></tr>
<tr><td>ATEX:
EPS 18 ATEX 1232 X
II 2G Ex mb IIC T4 Gb
II 2D Ex mb IIIC T130 °C Db

IECEx:
IECEx EPS 18.0110 X
Ex mb IIC T4 Gb
Ex mb IIIC T130 °C Db</td><td>ATEX:
EPS 18 ATEX 1232 X
II 2G Ex eb mb IIC T4 Gb
II 2D Ex mb tb IIIC T130 °C Db

IECEx:
IECEx EPS 18.0110 X
Ex eb mb IIC T4 Gb
Ex mb tb IIIC T130 °C Db</td></tr>
</table>
Optional: Explosion protection according to category 3 (zone 2/22)

Ex marking of the components according to the following table:
<table>
<tr><th>Coil Type AC10</th></tr>
<tr><th>Coil with plug contacts form A and cable plug Type 2509</th></tr>
<tr><td>ATEX:
EPS 18 ATEX 1232 X
II 2G Ex mb IIC T4 Gb
II 2D Ex mb IIIC T130 °C Db

IECEx:
IECEx EPS 18.0110 X
Ex mb IIC T4 Gb
Ex mb IIIC T130 °C Db</td></tr>
</table>
</td></tr>
</table>

DTS 1000010716 EN Version: - Status: RL (released | freigegeben | valide) printed: 01.10.2026

valvesgo.com

3.5. North America (USA/Canada)

Approval	Description
UL LISTED	**Optional: UL Listed for the USA (valid for valves)** The valves are UL Listed for the USA according to: • UL 429 (electrically operated valves)
c UL us LISTED SOLENOID FOR USE IN HAZARDOUS LOCATIONS E504714	**Optional: UL Hazardous Locations – Explosion Protection (valid for coils)** UL Listed for Hazardous Locations for USA and Canada Class I, Zone 1 Class I, Division 2, Group A, B, C and D Class II + III, Division 2, Group F and G
	Optional: UL Recognized for the USA (valid for valves) The valves are UL Recognized for the USA according to: • UL 429 (electrically operated valves)
	Optional: CSA for Canada (valid for valves) The valves are CSA approved for Canada according to: • CSA 139 (electrically operated valves)
FM c us APPROVED	**Optional: FM (Factory Mutual) – Explosion Protection (valid for coils)** FM for Hazardous Locations for USA and Canada Class I, Zone 1 Class I, Division 1, Groups A, B, C and D Class II + III, Division 1, Groups E, F and G

3.6. Drinking water

Conformity	Description
H_2O	**Suitable for use in drinking water applications** The materials comply with the assessment principles (UBA) for materials in contact with drinking water (Trinkwasserv). **PA body:** PF36: Suitable for products with a maximum temperature of + 60 °C (warm water) **PPS/brass/stainless steel body:** PF39: Suitable for products with a maximum temperature of + 85 °C (hot water)

3.7. Foods and beverages/Hygiene

Conformity	Description
FDA	**FDA – Code of Federal Regulations (valid for the variable code PL02, PL03)** All wetted materials are compliant with the Code of Federal Regulations published by the FDA (Food and Drug Administration, USA) according to the manufacturer's declaration.
USP	**United States Pharmacopeial Convention (USP) (valid for the variable code PL04)** All wetted materials are biocompatible according to the manufacturer's declaration.
	EC Regulation 1935/2004 of the European Parliament and of the Council (valid for the variable code PL01, PL02) All wetted materials are compliant with EC Regulation 1935/2004/EC according to the manufacturer's declaration.

DTS 1000010716 EN Version: - Status: RL (released | freigegeben | valide) printed: 01.10.2026

valvesgo.com

3.8. Others

Fuel gases

Conformity	Description
CE	**Fuel gases (valid for the variable code PO16)** The products comply with: • Regulation (EU) 2016/426 – Appliances burning gaseous fuels and • DVGW DIN EN 161 (Automatic shut-off valves for gas burners and gas appliances) and
DVGW	**Optional: DIN EN 549:2023-07 certification** The wetted valve seals are compliant with DIN EN 549:2023-07 (Rubber materials for seals and diaphragms for gas appliances and gas equipment) for medium temperatures of - 20 °C...+ 80 °C, for catering appliances for medium temperatures from 0 °C...+ 135 °C.

4. Materials

4.1. Bürkert resistApp

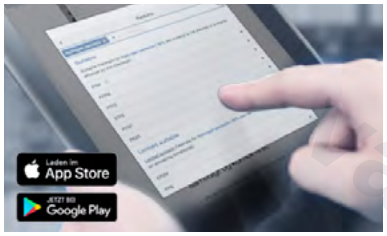

Bürkert resistApp – Chemical resistance chart

You want to ensure the reliability and durability of the materials in your individual application case? Verify your combination of media and materials on our website or in our resistApp.

Start chemical resistance check

4.2. Material specifications

Standard variant

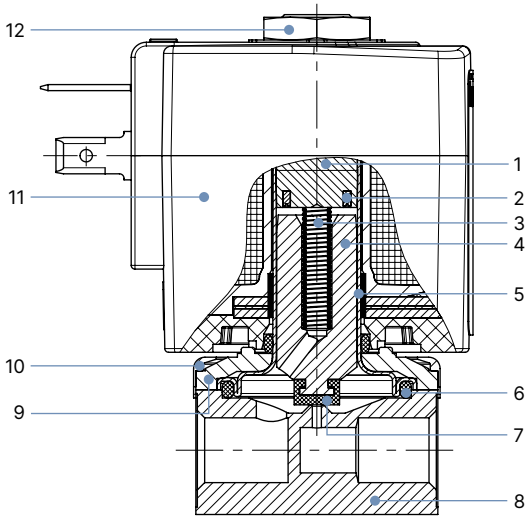

No.	Element	Material
1	Stopper	Stainless steel 1.4105/430F
2	Shading ring	Cu (brass variant) Ag (stainless steel variant)
3	Spring	Stainless steel 1.4310/301
4	Magnetic core	Stainless steel 1.4105/430F
5	Core guide tube	Stainless steel 1.4303/305/308
6	Seal	FKM Graphite (high temperature variant)
7	Armature seal	FKM PTFE
8	Valve body	Brass Stainless steel 1.4305/303
9	Sub-base	Steel, surface finish thick-film passivated (brass variant) Stainless steel 1.4301/304 (stainless steel variant)
10	Cover	Polyamide
11	Coil	PA (polyamide) Epoxy
12	Nut	Steel, surface finish thick-film passivated (brass variant) Stainless steel 1.4305/303 PTFE coated (stainless steel variant)

DTS 1000010716 EN Version: - Status: RL (released | freigegeben | valide) printed: 01.10.2026

valvesgo.com

ATEX/IECEx cable variant

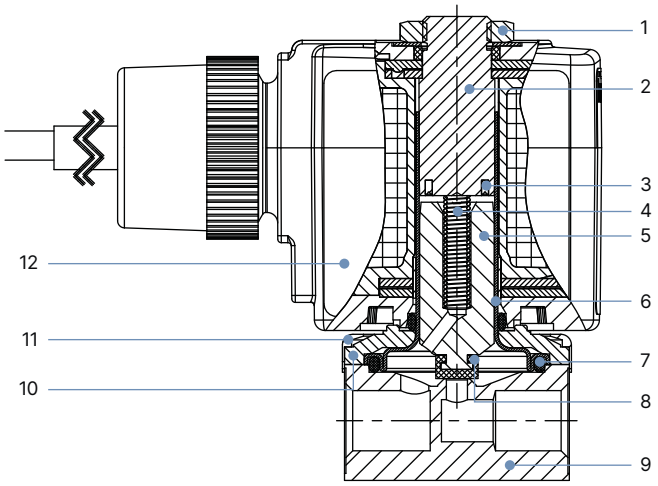

No.	Element	Material
1	Nut	Steel, surface finish thick-film passivated (brass variant) Stainless steel 1.4305/303 PTFE coated (stainless steel variant)
2	Stopper	Stainless steel 1.4105/430F
3	Shading ring	Cu (brass variant) Ag (stainless steel variant)
4	Spring	Stainless steel 1.4310/301
5	Magnetic core	Stainless steel 1.4105/430F
6	Core guide tube	Stainless steel 1.4303/305/308
7	Seal	FKM Graphite (high temperature variant)
8	Armature seal	FKM PTFE (high temperature variant)
9	Valve body	Brass Stainless steel 1.4305/303
10	Sub-base	Steel, surface finish thick-film passivated (brass variant) Stainless steel 1.4301/304 (stainless steel variant)
11	Cover	Polyamide
12	Coil	Epoxy

DTS 1000010716 EN Version: - Status: RL (released | freigegeben | valide) printed: 01.10.2026

valvesgo.com

valvesgo.com

ATEX/IECEx terminal box variant

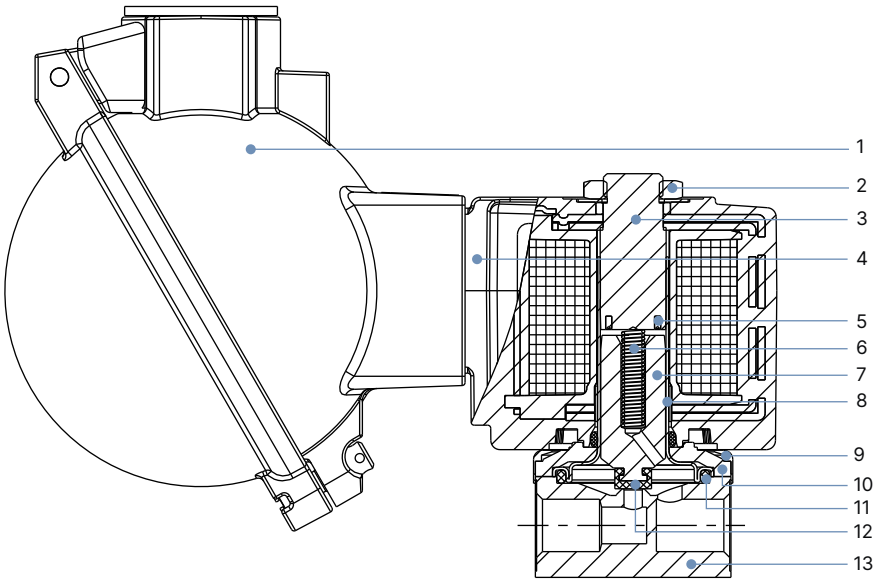

No.	Element	Material
1	Terminal box	Aluminium
2	Nut	Steel, surface finish thick-film passivated (brass variant) Stainless steel 1.4305/303 PTFE coated (stainless steel variant)
3	Stopper	Stainless steel 1.4105/430F
4	Coil	Epoxy
5	Shading ring	Cu (brass variant) Ag (stainless steel variant)
6	Spring	Stainless steel 1.4310/301
7	Magnetic core	Stainless steel 1.4105/430F
8	Core guide tube	Stainless steel 1.4303/305/308
9	Cover	Polyamide
10	Sub-base	Steel, surface finish thick-film passivated (brass variant) Stainless steel 1.4301/304 (stainless steel variant)
11	Seal	FKM Graphite (high temperature variant)
12	Armature seal	FKM PTFE (high temperature variant)
13	Valve body	Brass Stainless steel 1.4305/303

DTS 1000010716 EN Version: - Status: RL (released | freigegeben | valide) printed: 01.10.2026

valvesgo.com

5. Dimensions

5.1. Standard variant

Note:
Dimensions in mm

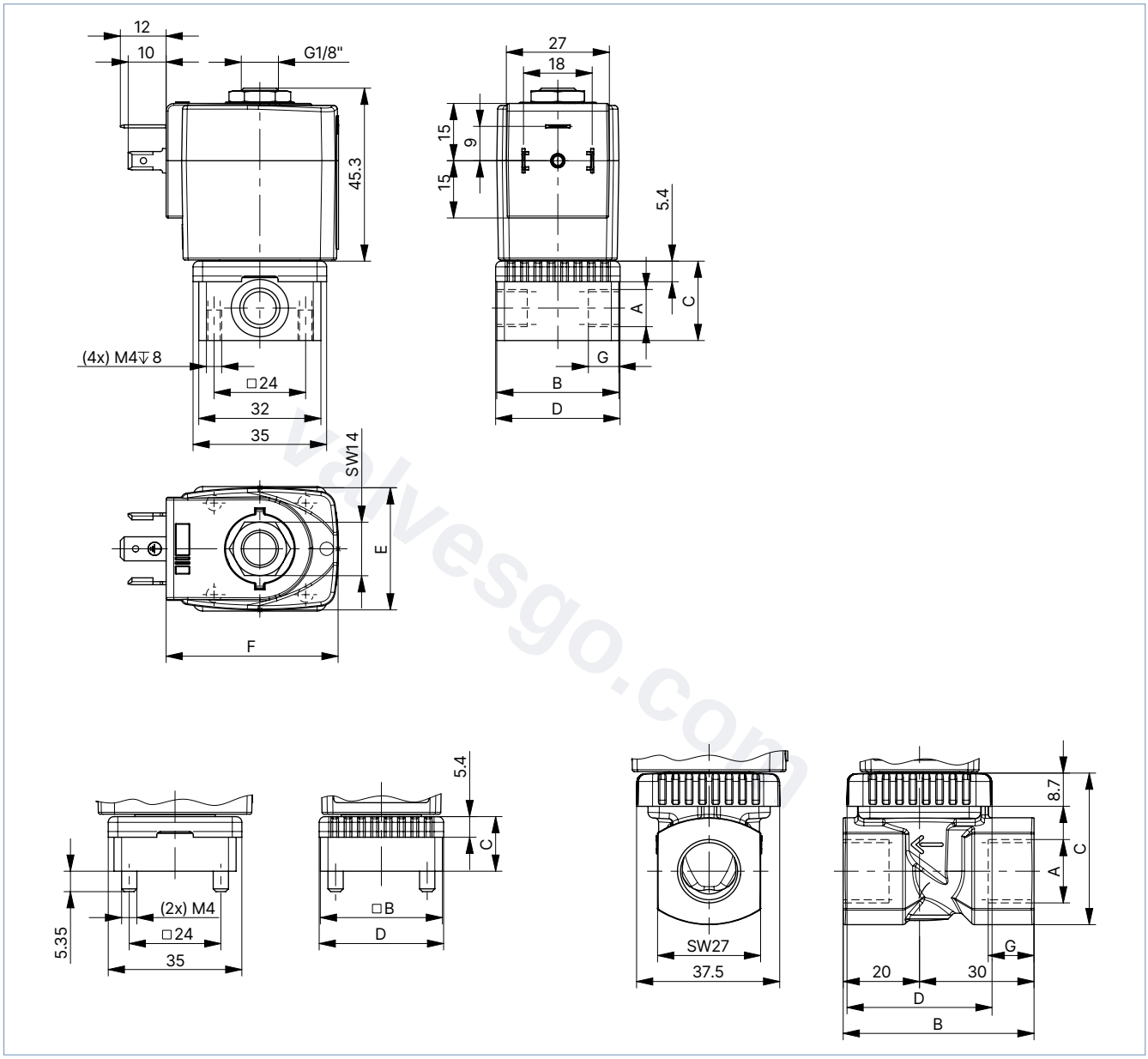

Port connection	A	B	C	D	G
	[inch]	[mm]	[mm]	[mm]	[mm]
Thread	G/NPT ⅛	32	20.8	32.6	8
	G/NPT ¼	46	26.8	49	12
	G/NPT ⅜	50	39.8	38	12
Flange	–	32	14.3	32.6	–

Coil size	E	F
	[mm]	[mm]
5	32	45
6	40	51

DTS 1000010716 EN Version: - Status: RL (released | freigegeben | valide) printed: 01.10.2026

valvesgo.com

5.2. ATEX/IECEx cable variant

Note:
Dimensions in mm

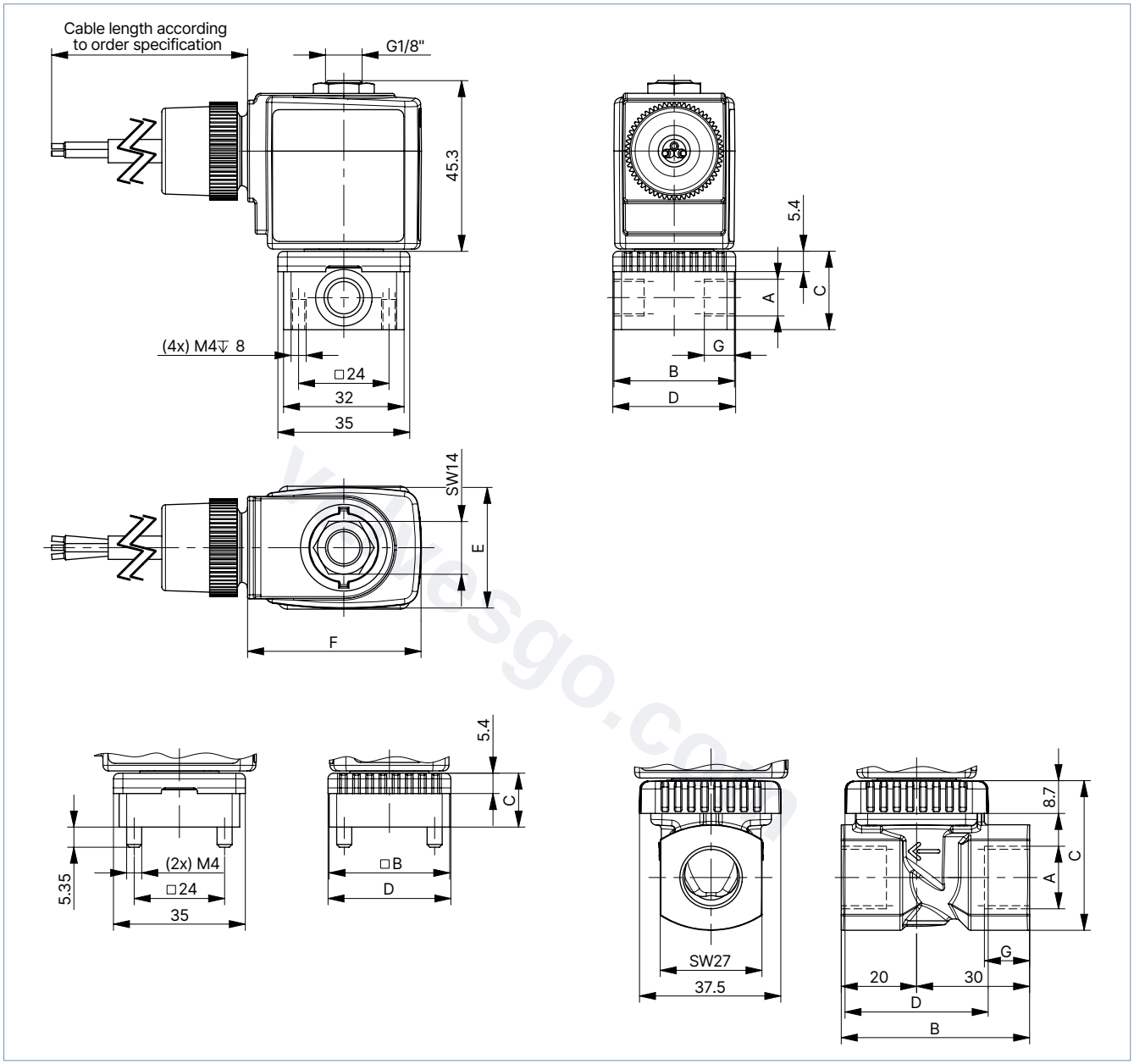

Port connection	A	B	C	D	G
	[inch]	[mm]	[mm]	[mm]	[mm]
Thread	G/NPT ⅛	32	20.8	32.6	8
	G/NPT ¼	46	26.8	49	12
	G/NPT ⅜	50	39.8	38	12
Flange	–	32	14.3	32.6	–

Coil size	E	F
	[mm]	[mm]
5	32	46
6	40	52

DTS 1000010716 EN Version: - Status: RL (released | freigegeben | valide) printed: 01.10.2026

valvesgo.com

5.3. ATEX/IECEx terminal box variant

Note:
Dimensions in mm

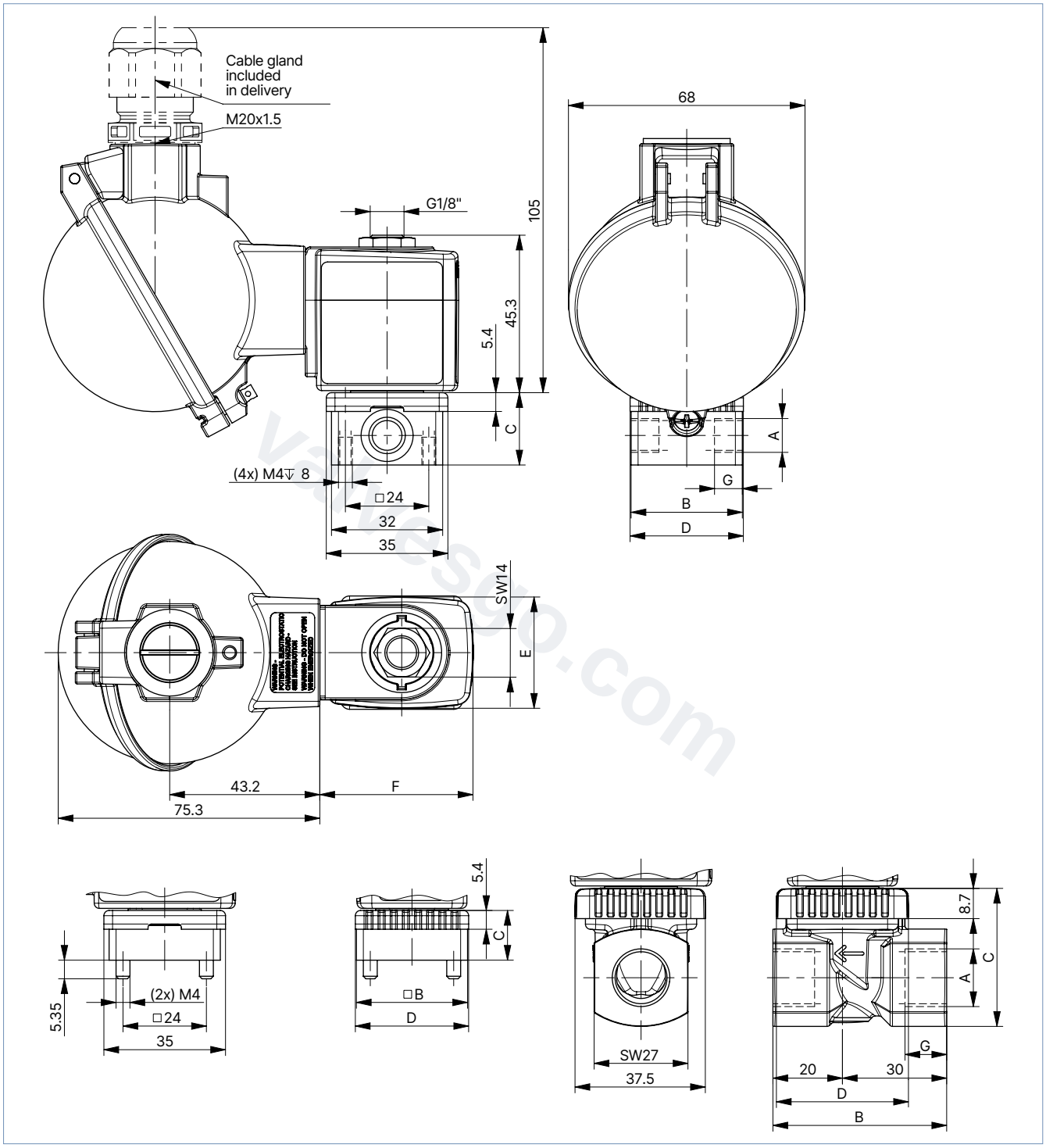

DTS 1000010716 EN Version: - Status: RL (released | freigegeben | valide) printed: 01.10.2026

valvesgo.com

Port Connection	A	B	C	D	H
	[inch]	[mm]	[mm]	[mm]	[mm]
Thread	G/NPT ⅛	32	20.8	32.6	8
	G/NPT ¼	46	26.8	49	12
	G/NPT ⅜	50	39.8	38	12
Flange	–	32	14.3	32.6	–

Coil size	E	F
	[mm]	[mm]
5	32	44
6	40	51

5.4. Single manifold

Note:

- Dimensions in mm
- Refer to "5.6. Manifolds for block mounting" on page 15 for more information about the installation of manifolds.

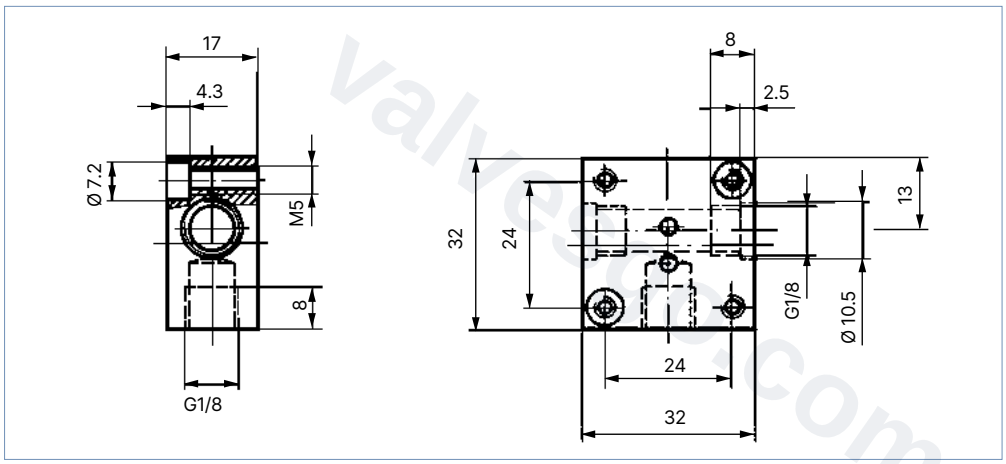

DTS 1000010716 EN Version: - Status: RL (released | freigegeben | valide) printed: 01.10.2026

valvesgo.com

5.5. Multiple manifold

Note:

- Dimensions in mm
- The manifold is only possible with coil size 5.
- Brass or stainless steel manifold is available on request.

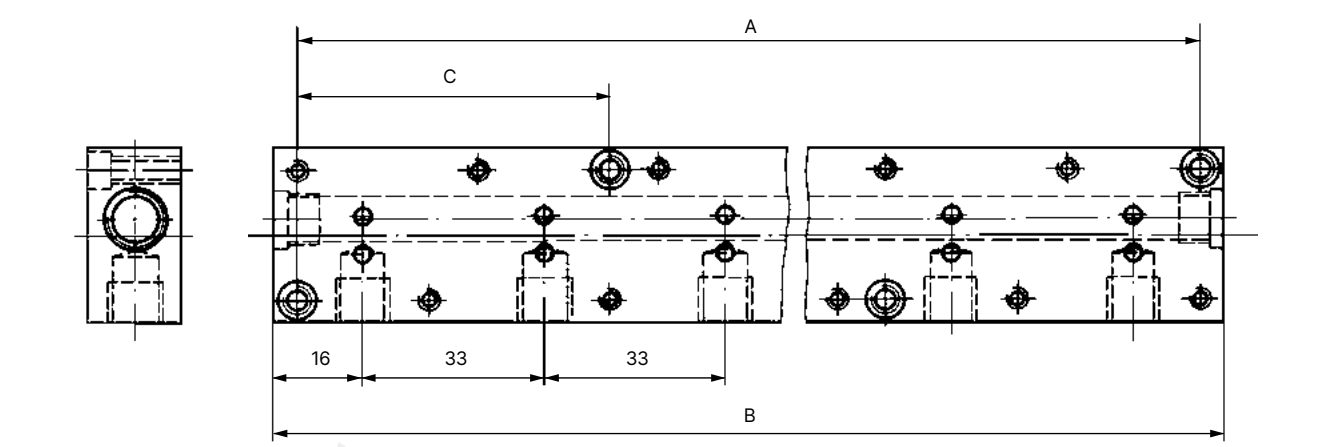

Accessory part	Quantity of valve places	Hole spacing A		Total length B		Hole spacing C		Article no.
		[mm]	[inch]	[mm]	[inch]	[mm]	[inch]	
Multiple manifold (in aluminium)	2	57	2.24	65	2.56	–	–	005023
	3	90	3.54	98	3.86	–	–	005286
	4	123	4.84	131	5.16	–	–	005287
	5	156	6.14	164	6.46	57	2.24	005035
	6	189	7.44	197	7.76	57	2.24	005038
	8	255	10.04	263	10.35	90	3.54	005386
	10	321	12.64	329	12.95	90	3.54	005764
Single manifold (in aluminium)								005020
Connector nipple with O-ring to connect from manifold								005040
Covering plate with screws and O-ring for locking unoccupied valve positions								005630

5.6. Manifolds for block mounting

Note:

- Close open ports for valves that are not required with cover plates (see accessories).
- Fasten the manifolds to a standard rail.
- Refer to chapter "5.5. Multiple manifold" on page 15 for more information about the dimensions.

With manifold mounting, please comply with the permissible duty cycle (5 W variants with 100 % continuous rating or standard 8 W model with 60 % duty cycle). The pressure port for the manifold is designated with P (R) and the outlet port with A (B). Only connect together ports with the same designation.

2/2-way valves of Type 6013 can be operated together on a manifold with 3/2-way valves of Type 6014, circuit function C (not D or T!) if the operating pressures matches according to the rating plates. The manifolds can also be expanded if the valve functions are taken into consideration. Connector nipples with O-rings are used to connect the P (R) ports.

DTS 1000010716 EN Version: - Status: RL (released | freigegeben | valide) printed: 01.10.2026

valvesgo.com

6. Performance specifications

6.1. Power consumption

Circuit function A

Orifice	Power consumption [1.)]	Electrical power		Coil size	Switching times	
		Inrush AC	Hold AC		Opening	Closing
[mm]	[W]	[VA]	[VA]		[ms]	[ms]
2.0	8 W AC or 8 W DC (9)	24	17	5 (32 mm)	20	30
2.5	8 W AC or 8 W DC (9)	24	17	5 (32 mm)	20	30
3.0	8 W AC or 8 W DC (9)	24	17	5 (32 mm)	20	30
3.0	10 W AC or 10 W DC (11)	30	22	6 (40 mm)	20	30
4.0	8 W AC or 8 W DC (9)	24	17	5 (32 mm)	20	30
4.0	10 W AC or 10 W DC (11)	30	22	6 (40 mm)	20	30
6.0	8 W AC or 8 W DC (9)	24	17	5 (32 mm)	20	30
6.0	10 W AC or 10 W DC (11)	30	22	6 (40 mm)	20	30

1.) The values in brackets correspond to a coil temperature of + 20 °C.

Circuit function B

Orifice	Power consumption [1.)]	Electrical power		Coil size	Switching times	
		Inrush AC	Hold AC		Opening	Closing
[mm]	[W]	[VA]	[VA]		[ms]	[ms]
2.00	7 W AC or 8 W DC (9)	24	17	5 (32 mm)	20	30
3.00	7 W AC or 8 W DC (9)	24	17	5 (32 mm)	20	30
4.00	7 W AC or 8 W DC (9)	24	17	5 (32 mm)	20	30
6.00	7 W AC or 8 W DC (9)	24	17	5 (32 mm)	20	30

1.) The values in brackets correspond to a coil temperature of + 20 °C.

DTS 1000010716 EN Version: - Status: RL (released | freigegeben | valide) printed: 01.10.2026

valvesgo.com

valvesgo.com

7. Product installation

7.1. Installation notes

Control for impulse variant with polarity reversal control

Note:

- Use cable plug without electrical wiring exclusively for impulse variant.
- Pulse duration min. 50 ms

Polarity (is marked on the coil with a label)	**Features**	**Terminal connections**
– switch ON +	valve open	(+) on terminal 2 and (–) on terminal 1 (see below)
+ switch OFF –	valve closed	(+) on terminal 1 and (–) on terminal 2 (see below)

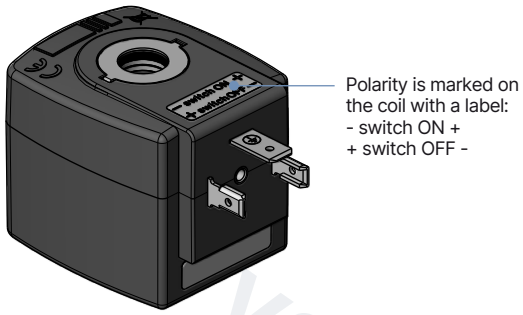

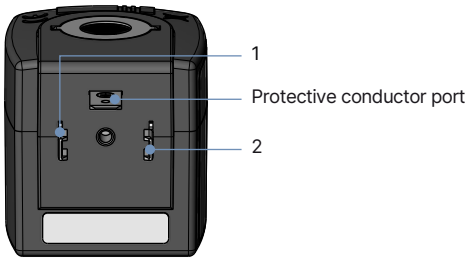

DTS 1000010716 EN Version: - Status: RL (released | freigegeben | valide) printed: 01.10.2026

valvesgo.com

valvesgo.com

8. Product accessories

8.1. Cable glands for ATEX/IECEx terminal box

Note:
A polyamide cable gland is included in the scope of delivery. A nickel-plated brass variant can be ordered for a surcharge, see "9.5. Ordering chart accessories" on page 24.

Description	Ex approval		Dimensions	
	Certification	Identification		
Ex cable gland, nickel-plated brass, 6...13 mm 	PTB 04 ATEX 1112 X, IECEx PTB 13.0027X	II 2 G Ex e IIC Gb, II 2 D Ex tb IIIC Db IP68	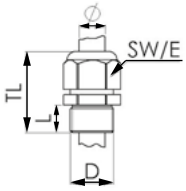	TL 29...37 mm L 6 mm D 20 mm SW 24 mm E 27 mm
Ex cable gland, polyamide, 7...13 mm 	PTB 13 ATEX 1015 X, IECEx PTB 13.0034X	II 2 G Ex e IIC Gb, II 2 D Ex tb IIIC Db IP68	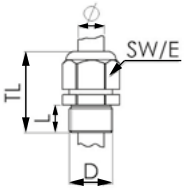	TL 36...45 mm L 10 mm D 20 mm SW 24 mm E 28 mm

8.2. Special tool to turn the terminal box

Note:
This special tool is not supplied with the valve, see "9.5. Ordering chart accessories" on page 24.

Description	Components of the set
Set SC02-AC10 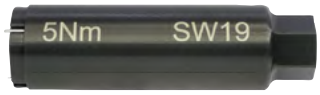	• Special tool • Service manual

DTS 1000010716 EN Version: - Status: RL (released | freigegeben | valide) printed: 01.10.2026

valvesgo.com

9. Ordering information

9.1. Bürkert eShop

Bürkert eShop – Easy ordering and quick delivery

You want to find your desired Bürkert product or spare part quickly and order directly? Our online shop is available for you 24/7. Sign up and enjoy all the benefits.

Order online now

9.2. Bürkert product filter

Bürkert product filter – Get quickly to the right product

You want to select products comfortably based on your technical requirements?
Use the Bürkert product filter and find suitable articles for your application quickly and easily.

Try out our product filter

9.3. Bürkert Product Enquiry Form

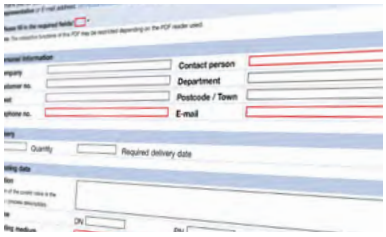

Bürkert Product Enquiry Form – Your enquiry quickly and compactly

Would you like to make a specific product enquiry based on your technical requirements? Use our Product Enquiry Form for this purpose. There you will find all the relevant information for your Bürkert contact. This will enable us to provide you with the best possible advice.

Fill out the form now

DTS 1000010716 EN Version: - Status: RL (released | freigegeben | valide) printed: 01.10.2026

valvesgo.com

9.4. Ordering chart

Standard variant

Note:
Please note that the cable plug must be ordered separately, see **"Cable plug Type 2518, form A according to DIN EN 175301 - 803" on page 24** or separate data sheet **Type 2518** ▶.

Circuit function	Port connection	Orifice	K_V value water [1.)]	Voltage/ Frequency	Coil power	Pressure range [2.)]	Article no. Brass body	Article no. Stainless steel body
		[mm]	[m³/h]	[V/Hz]	[W]	[bar]	FKM seal	
With FKM seal, brass or stainless steel body (class B)								
CF A 2/2-way solenoid valve Direct-acting Normally closed 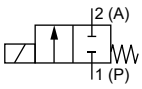 	G ⅛	2.0	0.12	024/DC	8	0...12	134237	134233
				024/50		0...25	132865	134234
				230/50		0...25	134239	134236
	G ¼		0.12	024/DC	8	0...12	137537	137533
				024/50		0...25	137538	137534
				230/50		0...25	137540	137536
	Flange (SFB)		0.12	024/DC	8	0...12	134244	145954
				024/50		0...25	134245	–
				230/50		0...25	20022979	–
	G ⅛	2.5	0.16	024/DC	8	0...10	134240	437352
				024/50		0...16	134241	–
				230/50		0...16	134243	–
	G ⅛	3.0	0.23	024/DC	8	0...6	126091	126078
				024/50		0...10	126092	126079
				230/50		0...10	126094	126081
	G ¼		0.23	024/DC	8	0...6	125301	125317
				024/50		0...10	125302	126082
				230/50		0...10	125304	126084
	G ⅜		0.23	024/DC	10	0...8	134248	–
				024/50		0...14	134249	–
				230/50		0...14	134251	–
	G ¼	4.0	0.30	024/DC	8	0...1.5	125306	125318
				024/50		0...4	125307	125319
				230/50		0...4	125309	125320
	G ⅜		0.30	024/DC	10	0...2.5	134252	–
				024/50		0...6	134253	–
				230/50		0...6	134255	–
	G ¼	6.0	0.55	024/DC	8	0...0.5	125311	126086
				024/50		0...1.5	125312	126087
				230/50		0...1.5	125314	126089
	G ⅜		0.55	024/DC	10	0...0.75	134256	–
				024/50		0...2.5	134257	–
				230/50		0...2.5	134259	–

– = not available

DTS 1000010716 EN Version: - Status: RL (released | freigegeben | valide) printed: 01.10.2026

valvesgo.com

Circuit function	Port connection	Orifice	K_V value water 1.)	Voltage/ Frequency	Coil power	Pressure range 2.)	Article no.
		[mm]	[m³/h]	[V/Hz]	[W]	[bar]	
For high temperature applications (- 40 °C...+ 180 °C), PTFE seat seal, brass body (class H)							
CF A 2/2-way solenoid valve Direct-acting Normally closed 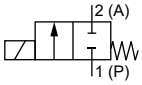	G ¼	2.0	0.12	024/DC	8	0...12	136015
				024/50		0...25	136016
				230/50		0...25	136018
	G ¼	3.0	0.23	024/DC	10	0...6	136019
				024/50		0...10	136020
				230/50		0...10	136022
	G ⅜		0.23	024/DC	10	0...8	136023
				024/50		0...14	136024
				230/50		0...14	136026

1.) Measurement at + 20 °C, 1 bar 2.) at the valve inlet and free outlet
2.) Pressure data: overpressure to atmospheric pressure

Circuit function	Port connection	Orifice	K_V value water 1.)	Voltage/ Frequency	Coil power	Pressure range 2.)	Article no.
		[mm]	[m³/h]	[V/Hz]	[W]	[bar]	
With FKM seal and brass body (class H)							
CF B 2/2-way solenoid valve Direct-acting Normally open 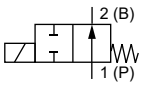	G ⅛	2.0	0.12	024/DC	8	0...16	213543
				230/50	7		213550
	G ⅛	3.0	0.23	024/DC	8	0...8	213545
				230/50	7		213551
	G ¼		0.23	024/DC	8	0...8	213546
				230/50	7		213552
	G ¼	4.0	0.3	0024/DC	8	0...4	213548
				230/50	7		213553
	G ¼	6.0	0.55	0024/DC	8	0...2	213549
				230/50	7		213554

1.) Measurement at + 20 °C, 1 bar 2.) at the valve inlet and free outlet
2.) Pressure data: overpressure to atmospheric pressure

Impulse variant

Note:
Please note that the cable plug must be ordered separately, see **"Cable plug Type 2518, form A according to DIN EN 175301 - 803" on page 24** or separate data sheet **Type 2518** ▶.

Circuit function	Port connection	Orifice	K_V value water 1.)	Pressure range 2.)	Power consumption DC (warm/cold coil)	Article no.	
						012/DC	024/DC
		[mm]	[m³/h]	[bar]	[W]	[V/Hz]	[V/Hz]
With FKM seal and brass body (class H)							
CF A 2/2-way solenoid valve Direct-acting Normally closed 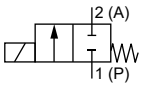	Flange (SFB)	2.0	0.12	0...16	7	209266	209272
		2.5	0.16	0...10	7	209267	209273
		3.0	0.23	0...6	7	209268	209274
	G ⅛	2.0	0.12	0...16	7	209269	209275
		2.5	0.16	0...10	7	209270	209276
		3.0	0.23	0...6	7	209271	209277

1.) Measurement at + 20 °C, 1 bar 2.) at the valve inlet and free outlet
2.) Pressure data: overpressure to atmospheric pressure

DTS 1000010716 EN Version: - Status: RL (released | freigegeben | valide) printed: 01.10.2026

valvesgo.com

Analytical variant

Note:
Please note that the cable plug must be ordered separately, see **"Cable plug Type 2518, form A according to DIN EN 175301 - 803" on page 24** or separate data sheet **Type 2518** ▶.

Circuit function	Port connection	Orifice	K_V value water 1.)	Voltage/ Frequency	Coil power	Pressure range 2.)	Article no.
		[mm]	[m³/h]	[V/Hz]	[W]	[bar]	
With FKM seal and brass body (class B)							
CF A 2/2-way solenoid valve Direct-acting Normally closed 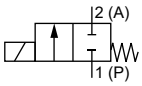	G ⅛	2.0	0.12	024/DC	8	0...12	137826
				230/50		0...25	137827
	G ⅛	2.5	0.16	024/DC	8	0...10	137828
				230/50		0...16	137829
	G ¼	3.0	0.23	024/DC	8	0...6	137830
				230/50		0...10	137831
	G ¼	4.0	0.30	024/DC	8	0...1.5	137832
				230/50		0...4	137833
With FKM seal and stainless steel body (class B)							
CF A 2/2-way solenoid valve Direct-acting Normally closed 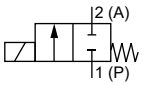	G ⅛	2.0	0.12	024/DC	8	0...12	137818
				230/50		0...25	137819
	G ¼	2.0	0.12	024/DC	8	0...12	137820
				230/50		0...25	137821
	G ¼	3.0	0.23	024/DC	8	0...6	137822
				230/50		0...10	137823
	G ¼	4.0	0.30	024/DC	8	0...1.5	137824
				230/50		0...4	137825

1.) Measurement at + 20 °C, 1 bar 2.) at the valve inlet and free outlet
2.) Pressure data: overpressure to atmospheric pressure

DVGW variant

Circuit function	Port connection	Orifice	K_V value water 1.)	Voltage/ Frequency	Coil power	Pressure range 2.)	Article no.
		[mm]	[m³/h]	[V/Hz]	[W]	[bar]	
With NBR seal, brass body (class B)							
CF A 2/2-way solenoid valve Direct-acting Normally closed 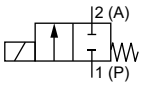	G ¼	3.0	0.23	024/DC	8	0...5	258362
				230/50		0...5	296548
	G ¼	4.0	0.3	024/DC	8	0...1.5	258361
				230/50		0...4	296549
	G ¼	6.0	0.55	024/DC	8	0...0.15	266293
				230/50		0...1.5	301072

1.) Measurement at + 20 °C, 1 bar 2.) at the valve inlet and free outlet
2.) Pressure data: overpressure to atmospheric pressure

DTS 1000010716 EN Version: - Status: RL (released | freigegeben | valide) printed: 01.10.2026

valvesgo.com

ATEX/IECEx cable variant

Note:

- The maximum medium temperature must never exceed the permitted temperature class (T4: + 135 °C, T5: + 100 °C, T6: + 85 °C) minus 5 K.
- With 3 m cable as standard. Other lengths are available on request.

Circuit function	Port connection	Orifice	K_V value water 1.)	Voltage/ Frequency	Coil power	Pressure range 2.)	Article no.	
		[mm]	[m³/h]	[V/Hz]	[W]	[bar]	Brass body	Stainless steel body
Ex m T4 approved, with FKM seal and molded cable (3 m), single mounting only								
CF A 2/2-way solenoid valve Direct-acting Normally closed 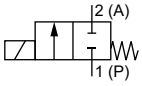 	manifold (SFB)	2.0	0.11	024 / AC/DC	7	0...6	351923	351915
				230 / AC/DC			364417	o. r.
	G ⅛		0.12	024 / AC/DC	9	0...10	351895	351900
				230 / AC/DC			o. r.	351926
	G ¼		0.12	024 / AC/DC	9	0...10	351909	351901
				230 / AC/DC			351920	351914
	G ⅛	2.5	0.16	024 / AC/DC	9	0...8	364430	o. r.
				230 / AC/DC			o. r.	o. r.
	G ⅛	3.0	0.23	024 / AC/DC	9	0...5	o. r.	351933
				230 / AC/DC			o. r.	o. r.
	G ¼		0.23	024 / AC/DC	9	0...5	351896	351899
				230 / AC/DC			351925	351936
	G ¼	4.0	0.30	024 / AC/DC	9	0...1.2	351921	364523
				230 / AC/DC			o. r.	364528
	G ¼	6.0	0.55	024 / AC/DC	9	0...0.4	351902	351948
				230 / AC/DC			364517	o. r.

o. r. = on request

ATEX/IECEx terminal box variant

Note:
The maximum medium temperature must never exceed the permitted temperature class (T4: + 135 °C, T5: + 100 °C, T6: + 85 °C) minus 5 K.

Circuit function	Port connection	Orifice	K_V value water 1.)	Voltage/ Frequency	Coil power	Pressure range 2.)	Article no.	
		[mm]	[m³/h]	[V/Hz]	[W]	[bar]	Brass body	Stainless steel body
Ex m T4 approved, with FKM seal and molded cable (3 m), single mounting only								
CF A 2/2-way solenoid valve Direct-acting Normally closed 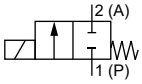 	manifold (SFB)	1.5	0.08	024 / AC/DC	9	0...16	364529	o. r.
	G ⅛	2	0.12	024 / AC/DC		0...10	351938	351953
				230 / AC/DC			364533	364537
	G ¼			024 / AC/DC			351944	351917
				230 / AC/DC			364538	351929

DTS 1000010716 EN Version: - Status: RL (released | freigegeben | valide) printed: 01.10.2026

valvesgo.com

Circuit function	Port connection	Orifice	K_V value water 1.)	Voltage/ Frequency	Coil power	Pressure range 2.)	Article no.	
		[mm]	[m³/h]	[V/Hz]	[W]	[bar]	Brass body	Stainless steel body
CF A 2/2-way solenoid valve Direct-acting Normally closed 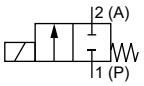	G ⅛	3	0.23	024 / AC/DC	9	0...5	364540	o. r.
				230 / AC/DC			o. r.	o. r.
	G ¼			024 / AC/DC			o. r.	351906
				230 / AC/DC			o. r.	364541
		4	0.3	024 / AC/DC		0...1.2	351941	364544
				230 / AC/DC			o. r.	364548
		6	0.55	024 / AC/DC		0...0.4	364551	364554
				230 / AC/DC			364555	364556

o. r. = on request

Further variants on request

Approval Further information can be found in chapter "3. Approvals and conformities" on page 6.	**Pressure** Variants with increased coil power for higher medium pressure
Material Seal material EPDM	**Process connection** Threaded port NPT, Rc
Voltage Further voltages on request	

9.5. Ordering chart accessories

Singel manifold

Note:
Refer to chapter "5.4. Single manifold" on page 14 for more order information.

Multiple manifold

Note:
Refer to chapter "5.5. Multiple manifold" on page 15 for more order information.

Cable plug Type 2518, form A according to DIN EN 175301 - 803

Note:
- Dimensions in mm
- For further variants see data sheet **Type 2518** ▶.

Cable plug	Dimensions	Variant	Voltage	Article no.
	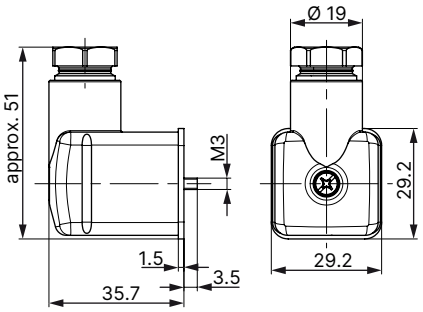	Without wiring (AC/DC)	0...250 V AC/DC	314802
		With LED (AC/DC)	12...24 V AC/DC	314812
		With LED and varistor (AC/DC)	12...24 V AC/DC	314820
		With rectifier, LED and varistor	12...24 V AC/DC	314816
		Without wiring (AC/DC) with silicone seal for higher ambient temperature, e.g. steam variant (NA07)	0...250 V AC/DC	361687

DTS 1000010716 EN Version: - Status: RL (released | freigegeben | valide) printed: 01.10.2026

valvesgo.com

valvesgo.com

Cable plug Type 2509, form A according to DIN EN 175301 - 803

Note:

- Dimensions in mm
- Without wiring (Standard)
- Refer to data sheet **Type 2509** ▶ for more information about the cable plug.

Cable plug	Dimensions	Variant	Voltage	Article no.
	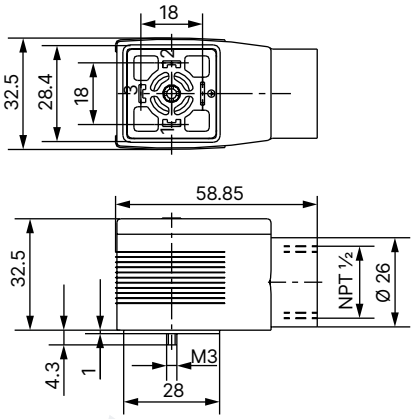	Without wiring	0...250 V AC/DC	137943

Cable glands for ATEX/IECEx terminal box

Note:

- A polyamide cable gland is included in the scope of delivery. A nickel-plated brass variant can be ordered for a surcharge.
- Refer to **"8.1. Cable glands for ATEX/IECEx terminal box" on page 18** for more information about Ex cable glands.
- Refer to **"8.2. Special tool to turn the terminal box" on page 18** for more information about special tool.

Description	Article no.
Ex cable gland, nickel-plated brass, 6...13 mm [1.)]	773278
Ex cable gland, polyamide, 7...13 mm [1.)]	773277
Set SC02-AC10: special tool [2.)] incl. service manual	293488

1.) Cable diameter
2.) Not included in the scope of delivery of the valve

DTS 1000010716 EN Version: - Status: RL (released | freigegeben | valide) printed: 01.10.2026

valvesgo.com