Servo-assisted 2/2-way piston valve

- Servo-assisted piston valve with an orifice up to DN 50
- Explosion proof variant for Cat. 2
- Suitable for gas and steam applications up to + 180 °C
- Relief valves for compressors
- Energy-saving double coil technology with kick and drop variant

Product variants described in the data sheet may differ from the product presentation and description.

Can be combined with

Type 2518
Cable plug,
form A according to
DIN EN 175301 - 803

Type 2509
Cable plug,
form A according to
DIN EN 175301 - 803

Type description

The 5404 valve is a servo-assisted piston valve available in NC and NO variant. A minimum differential pressure is required for the valve switching function. The solenoid coils are moulded with high-quality epoxy resin. To reduce power consumption in operation, coils with "Kick and Drop" (KD) electronics assembly (double coil technology) are available. In combination with a plug to DIN EN 175301 - 803 Form A, the valves satisfy degree of protection IP65. The cable plug is not included and must be ordered separately.

DTS 1000011017 EN Version: AE Status: RL (released | freigegeben | valide) printed: 15.01.2026

© Christian Bürkert GmbH & Co. KG, Subject to alteration

valvesgo.com

Table of contents

1. General technical data 4

2. Circuit functions 5

3. Approvals and conformities 5

3.1. General notes 5
3.2. Conformity 5
3.3. Standards 5
3.4. Explosion protection 6
3.5. North America (USA/Canada) 6
3.6. Others 7
Oxygen 7

4. Materials 7

4.1. Bürkert resistApp 7
4.2. Material specifications standard variant 7
DN 12, circuit function A 7
DN 25, circuit function B 8
DN 32, circuit function A 8
4.3. Material specifications steam variant NA07 9
DN 13, circuit function A 9
DN 32, circuit function A, flange body 9
4.4. Material specifications high pressure variant PN 08 10
DN 12, circuit function A 10
4.5. Material specifications discharge valve for compressor systems CF05 10
DN 12, circuit function B 10

5. Dimensions 11

5.1. Standard variant 11
Threaded variant DN 12 11
Threaded variant DN 20 and DN 25 12
Threaded variant DN 32 and DN 50 13
5.2. Steam variant NA07 14
Threaded variant DN 13 14
Threaded variant DN 20 and DN 25 14
Flange variant DN 25 15
Threaded variant DN 32 and DN 40 15
Flange variant DN 32 and DN 40 16
5.3. High pressure variant PN 08 17
5.4. Discharge valve for compressor systems CF05 17
Plug variant with ventilation 17
5.5. ATEX/IECEx variant 18
Cable variant 18
Terminal box variant 18

6. Performance specifications 19

6.1. Temperature/duty cycle derating diagram for steam variant NA07 19
6.2. Characteristic values of intermittent operation 19

7. Product accessories 19

7.1. Cable glands for ATEX/IECEx terminal box 19
7.2. Special tool to turn the terminal box 20

DTS 1000011017 EN Version: AE Status: RL (released | freigegeben | valide) printed: 15.01.2026

valvesgo.com

8. Ordering information 20

8.1. Bürkert eShop 20
8.2. Bürkert product filter 20
8.3. Bürkert Product Enquiry Form 20
8.4. Ordering chart 21
Standard variant DN 12...DN 25 21
Standard variant DN 32...DN 50 21
Steam variant NA07, DN 13...DN 25 22
Steam variant NA07, DN 32...DN 40 22
High pressure variant PN 08 23
Discharge valve for compressor systems CF05 23
ATEX/IECEx cable variant 24
ATEX/IECEx terminal box variant 24
8.5. Ordering chart accessories 25
Cable plug Type 2518, form A according to DIN EN 175301 - 803 25
Cable plug Type 2509, form A according to DIN EN 175301 - 803 25
Cable glands for ATEX/IECEx terminal box 25

DTS 1000011017 EN Version: AE Status: RL (released | freigegeben | valide) printed: 15.01.2026

valvesgo.com

valvesgo.com

1. General technical data

Product properties	
Dimensions	Further information can be found in chapter "5. Dimensions" on page 11.
Material	
Seal	PTFE seat seal and FKM PTFE seat seal and Graphite (steam variant) PTFE seat seal and EPDM (on request)
Body	Brass
Coil	Epoxy resin (polyamide on request)
Valve inner parts	Stainless steel, brass
Orifice	DN 12...DN 50
Circuit function	A and B Further information can be found in chapter "2. Circuit functions" on page 5.
Thermal insulation class of solenoid coil	Epoxy resin coil class H (class B on request)
Performance data	
Duty cycle	100 % continuous operation
Switching time	
DN 12...DN 25	Opening: 20...400 ms Closing: 100...1500 ms
DN 32...DN 50	Opening: 200...1500 ms Closing: 1000...3000 ms
Electrical data	
Operating voltage	24 V DC, 24 V 50 Hz, 24 V 60 Hz, 110 V 50 Hz, 120 V 60 Hz, 230 V 50 Hz, 240 V 60 Hz (further voltages on request)
Power consumption	
Circuit function A, DN 12...DN 25 (not in combination with high pressure PN 08)	Inrush AC: 24 VA Hold AC (warm coil): 14 VA/8 W Hold DC (warm/cold coil): 8/9.5 W
Circuit function B, DN 12...DN 25	Inrush AC: 24 VA Hold AC (warm coil): 14 VA/8 W Hold DC (warm/cold coil): 8/9.5 W
Explosion-proof variant	Inrush AC: 9 VA Hold AC (warm coil): 9 VA Hold DC (warm/cold coil): 9 W
Circuit function A, DN 32...DN 50 and DN 12 as high pressure PN 08	Inrush AC: 24 VA Hold AC (warm coil): 16 VA/10 W Hold DC (warm/cold coil): 12/13 W
Voltage tolerance	± 10 %
Medium data	
Operating medium	Neutral gases and liquids (e.g. compressed air, water, hydraulic oil and steam)
Medium temperature	
Standard variant	- 10 °C...+ 120 °C
Steam variant	Up to + 160 °C, see "6.1. Temperature/duty cycle derating diagram for steam variant NA07" on page 19 (from - 40 °C on request) Up to + 180 °C for AC 6 Watt
Viscosity	Max. 21 mm²/s (21 cSt)
Product connections	
Electrical connection	• Plug contacts according to DIN EN 175 301 - 803 form A for cable plug **Type 2518** ▸. Further information can be found in chapter "Cable plug Type 2518, form A according to DIN EN 175301 - 803" on page 25. • Plug contacts according to DIN EN 175 301 - 803 form A for cable plug **Type 2509** ▸. Further information can be found in chapter "Cable plug Type 2509, form A according to DIN EN 175301 - 803" on page 25.
Port connection	G ½, G ¾, G 1, G 1 ¼, G 1 ½, G 2 NPT ½, NPT ¾, NPT 1, NPT 1 ¼, NPT 1 ½, NPT 2

DTS 1000011017 EN Version: AE Status: RL (released | freigegeben | valide) printed: 15.01.2026

valvesgo.com

Approvals and conformities		
Degree of protection	IP65 with cable plug **Type 2518** ▶ (IP67 on request) NEMA 4X with cable plug **Type 2509** ▶ with stainless steel screws and epoxy coil	
Explosion protection	Further information can be found in chapter **"3.4. Explosion protection" on page 6**.	
North America (USA/Canada)	Further information can be found in chapter **"3.5. North America (USA/Canada)" on page 6**.	
Others	Further information can be found in chapter **"3.6. Others" on page 7**.	
Environment and installation		
Installation position	As required, preferably with actuator upright	
Ambient temperature		
Standard variant	- 10 °C...+ 55 °C (- 40 °C on request)	
Variant with Kick and Drop coil	**30 switching cycles/min**	**1 switching cycle/min**
12/0.6 W	Max. + 70 °C	Max. + 85 °C
20/2.0 W	Max. + 70 °C	Max. + 85 °C
65/7.0 W	Max. + 55 °C	Max. + 70 °C

2. Circuit functions

Symbol	Description
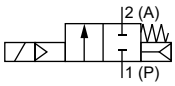	**Circuit function A (CF A)** 2/2-way solenoid valve Servo-controlled Normally closed
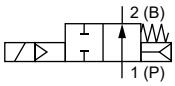	**Circuit function B (CF B)** 2/2-way solenoid valve Servo-controlled Normally open

3. Approvals and conformities

3.1. General notes

- The approvals and conformities listed below must be stated when making enquiries. This is the only way to ensure that the product complies with all required specifications.
- Not all available verions can be supplied with the below mentioned approvals or conformities.

3.2. Conformity

In accordance with the Declaration of Conformity, the product is compliant with the EU Directives.

3.3. Standards

The applied standards which are used to demonstrate compliance with the EU Directives are listed in the EU-Type Examination Certificate and/or the EU Declaration of Conformity.

DTS 1000011017 EN Version: AE Status: RL (released | freigegeben | valide) printed: 15.01.2026

valvesgo.com

3.4. Explosion protection

Approval	Description
	Optional: Explosion protection according to category 2 (zone 1/21) Ex marking of the components according to the following table:

Coil Type AC10	
Coils with cable outlet	**Coils with terminal box**
ATEX: EPS 18 ATEX 1232 X II 2G Ex mb IIC T4 Gb II 2D Ex mb IIIC T130 °C Db **IECEx:** IECEx EPS 18.0110 X Ex mb IIC T4 Gb Ex mb IIIC T130 °C Db	**ATEX:** EPS 18 ATEX 1232 X II 2G Ex eb mb IIC T4 Gb II 2D Ex mb tb IIIC T130 °C Db **IECEx:** IECEx EPS 18.0110 X Ex eb mb IIC T4 Gb Ex mb tb IIIC T130 °C Db

Optional: Explosion protection according to category 3 (zone 2/22)

Ex marking of the components according to the following table:

Coil Type AC10
Coil with plug contacts form A and cable plug Type 2509
ATEX: EPS 18 ATEX 1232 X II 2G Ex mb IIC T4 Gb II 2D Ex mb IIIC T130 °C Db **IECEx:** IECEx EPS 18.0110 X Ex mb IIC T4 Gb Ex mb IIIC T130 °C Db

3.5. North America (USA/Canada)

Approval	Description
	Optional: UL Listed for the USA (valid for valves) The valves are UL Listed for the USA according to: • UL 429 (electrically operated valves) and UL 429 A (Electrically Operated Valves for Fire Protection Service)
	Optional: UL Hazardous Locations – Explosion Protection (valid for coils) UL Listed for Hazardous Locations for USA and Canada Class I, Zone 1 Class I, Division 2, Group A, B, C and D Class II + III, Division 2, Group F and G
	Optional: UL Recognized for the USA (valid for valves) The valves are UL Recognized for the USA according to: • UL 429 (electrically operated valves) and UL 429 A (Electrically Operated Valves for Fire Protection Service)
	Optional: CSA for Canada (valid for valves) The valves are CSA approved for Canada according to: • CSA 139 (electrically operated valves)
	Optional: FM (Factory Mutual) – Explosion Protection (valid for coils) FM for Hazardous Locations for USA and Canada Class I, Zone 1 Class I, Division 1, Groups A, B, C and D Class II + III, Division 1, Groups E, F and G

DTS 1000011017 EN Version: AE Status: RL (released | freigegeben | valide) printed: 15.01.2026

valvesgo.com

3.6. Others

Oxygen

Conformity	Description
O_2	**Optional: Suitability for oxygen (valid for the variable code NL02)** The products are suitable for use with gaseous oxygen, according to the manufacturer's declaration.

4. Materials

4.1. Bürkert resistApp

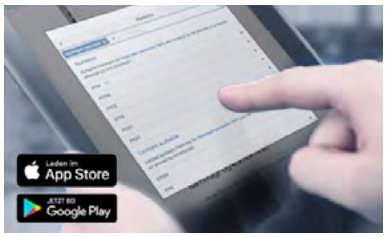

Bürkert resistApp – Chemical resistance chart

You want to ensure the reliability and durability of the materials in your individual application case? Verify your combination of media and materials on our website or in our resistApp.

Start chemical resistance check

4.2. Material specifications standard variant

DN 12, circuit function A

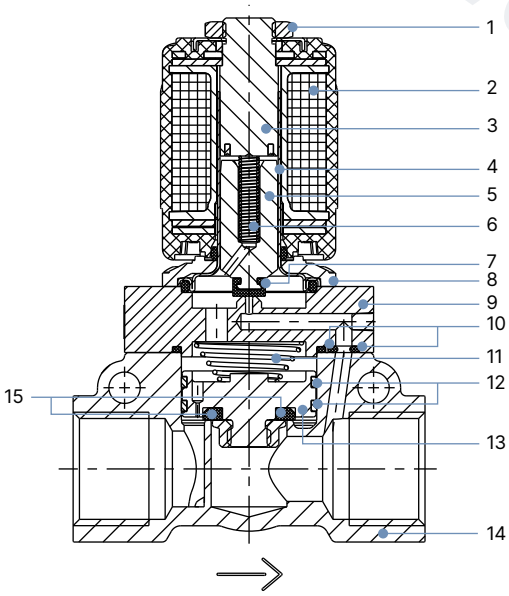

No.	Element	Material
1	Nut	Steel (thick-film passivated according to RoHS)
2	Coil	Epoxy (polyamide optional)
3	Stopper	Stainless steel 1.4105/303 [1.)]
4	Armature guide tube	Stainless steel 1.4303/305 [1.)]/308 [1.)]
5	Plunger	Stainless steel 1.4105/430F [1.)]
6	Spring	Stainless steel 1.4310/301 [1.)]
7	Plunger seal	FKM (EPDM optional)
8	Flange	Steel (thick-film passivated according to RoHS)
9	Cover	Brass
10	O-ring	FKM (EPDM optional)
11	Spring	Stainless steel 1.4310/301 [1.)]
12	Piston ring	PTFE
13	Piston	Brass
14	Valve body	Brass
15	Piston seal	PTFE

1.) Material designation according to AISI

DTS 1000011017 EN Version: AE Status: RL (released | freigegeben | valide) printed: 15.01.2026

valvesgo.com

DN 25, circuit function B

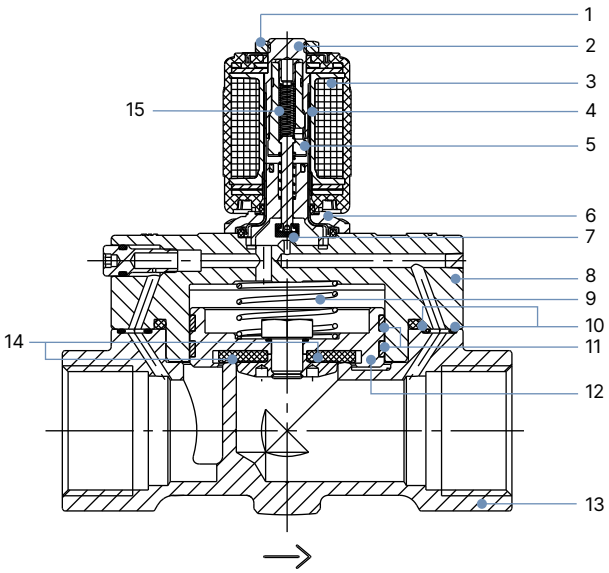

No.	Element	Material
1	Nut	Steel (thick-film passivated according to RoHS)
2	Stopper	Stainless steel 1.4113/434 [1.)]
3	Coil	Epoxy
4	Armature guide tube	Stainless steel 1.4303/305 [1.)]/308 [1.)]
5	Plunger	Stainless steel 1.4113/434 [1.)]/1.4305/303 [1.)]
6	Flange	Steel (thick-film passivated according to RoHS)
7	Plunger seal	FKM (EPDM optional)
8	Cover	Brass
9	Spring	Stainless steel 1.4310/301 [1.)]
10	O-ring	FKM (EPDM optional)
11	Piston ring	PTFE
12	Piston	Brass
13	Valve body	Brass
14	Piston seal	PTFE
15	Spring	Stainless steel 1.4310/301 [1.)]

1.) Material designation according to AISI

DN 32, circuit function A

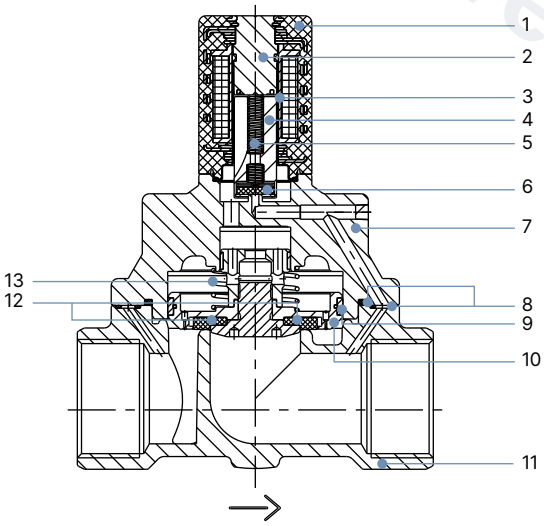

No.	Element	Material
1	Coil	Epoxy
2	Stopper	Stainless steel 1.4105/430F [1.)]
3	Armature guide tube	Stainless steel 1.4303/305 [1.)]/308 [1.)]
4	Plunger	Stainless steel 1.4105/430F [1.)]
5	Spring	Stainless steel 1.4310/301 [1.)]
6	Plunger seal	FKM
7	Cover	Brass
8	O-ring	FKM
9	Piston ring	PTFE
10	Piston	Brass
11	Valve body	Brass
12	Piston seal	PTFE
13	Spring	Stainless steel 1.4310/301 [1.)]

1.) Material designation according to AISI

DTS 1000011017 EN Version: AE Status: RL (released | freigegeben | valide) printed: 15.01.2026

valvesgo.com

4.3. Material specifications steam variant NA07

DN 13, circuit function A

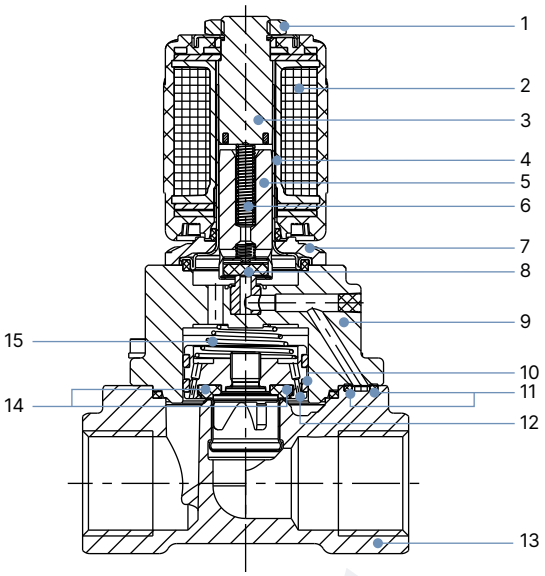

No.	Element	Material
1	Nut	Steel (thick-film passivated according to RoHS)
2	Coil	Epoxy
3	Stopper	Stainless steel 1.4113/434 [1.)]
4	Armature guide tube	Stainless steel 1.4303/305 [1.)]
5	Plunger	Stainless steel 1.4113/434 [1.)]
6	Spring	Stainless steel 1.4310/301 [1.)]
7	Flange	Steel (thick-film passivated according to RoHS)
8	Plunger seal	PTFE
9	Cover	Brass
10	Piston ring	PTFE
11	O-ring	Graphite
12	Piston	Brass
13	Valve body	Brass
14	Piston seal	PTFE
15	Spring	Stainless steel 1.4310/301 [1.)]

1.) Material designation according to AISI

DN 32, circuit function A, flange body

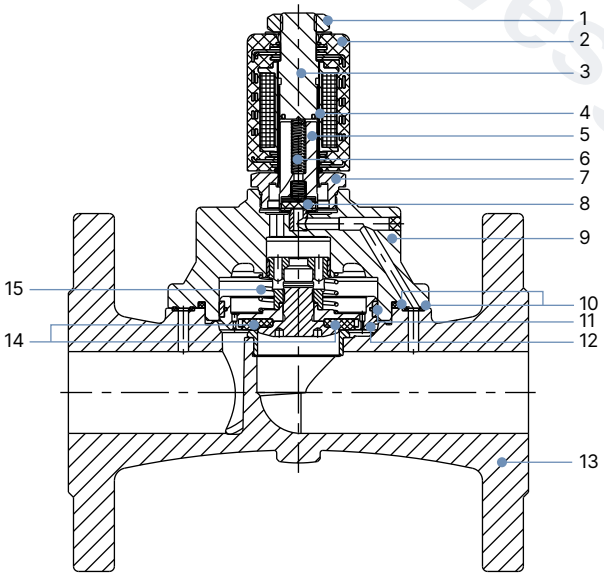

No.	Element	Material
1	Nut	Steel (thick-film passivated according to RoHS)
2	Coil	Epoxy
3	Stopper	Stainless steel 1.4113/434 [1.)]
4	Armature guide tube	Stainless steel 1.4571/316Ti [1.)]
5	Plunger	Stainless steel 1.4113/434 [1.)]
6	Spring	Stainless steel 1.4310/301 [1.)]
7	Threaded tube	Stainless steel 1.4401/316 [1.)] or 1.4571/316Ti [1.)]
8	Plunger seal	PTFE
9	Cover	Brass
10	O-ring	Graphite
11	Piston ring	PTFE
12	Piston	Brass
13	Valve body	Stainless steel 1.4581/similar 316Ti [1.)]
14	Piston seal	PTFE
15	Spring	Stainless steel 1.4310/301 [1.)]

1.) Material designation according to AISI

DTS 1000011017 EN Version: AE Status: RL (released | freigegeben | valide) printed: 15.01.2026

valvesgo.com

4.4. Material specifications high pressure variant PN 08

DN 12, circuit function A

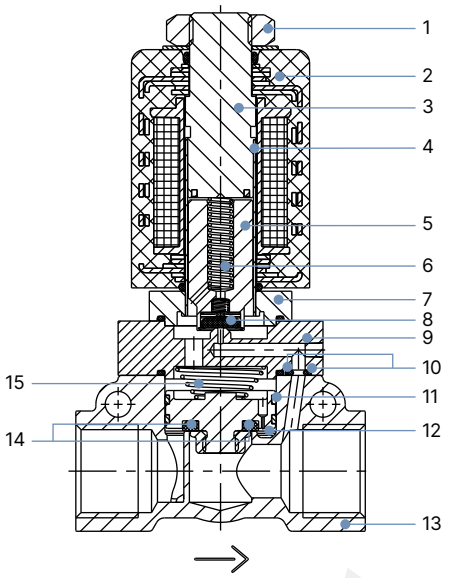

No.	Element	Material
1	Nut	Steel (thick-film passivated according to RoHS)
2	Coil	Epoxy (polyamide)
3	Stopper	Stainless steel 1.4113/434 [1.)]
4	Armature guide tube	Stainless steel 1.4571/316Ti [1.)]
5	Plunger	Stainless steel 1.4113/434 [1.)]
6	Spring	Stainless steel 1.4310/301 [1.)]
7	Flange	Stainless steel 1.4401/316 [1.)]
8	Plunger seal	PTFE
9	Cover	Brass
10	O-ring	FKM
11	Piston ring	PTFE
12	Piston	Brass
13	Valve body	Brass
14	Piston seal	PTFE
15	Spring	Stainless steel 1.4310/301 [1.)]

1.) Material designation according to AISI

4.5. Material specifications discharge valve for compressor systems CF05

DN 12, circuit function B

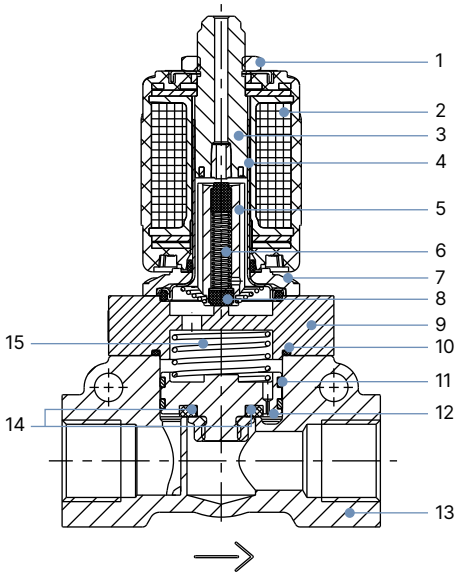

No.	Element	Material
1	Nut	Steel (thick-film passivated according to RoHS)
2	Coil	Epoxy (polyamide optional)
3	Stopper	Stainless steel 1.4105/430F [1.)]
4	Armature guide tube	Stainless steel 1.4303/305 [1.)]
5	Plunger	Stainless steel 1.4105/430F [1.)]
6	Spring	Stainless steel 1.4310/301 [1.)]
7	Flange	Steel (thick-film passivated according to RoHS)
8	Plunger seal	FKM
9	Cover	Brass
10	O-ring	FKM
11	Piston ring	PTFE
12	Piston	Brass
13	Valve body	Brass
14	Piston seal	PTFE
15	Spring	Stainless steel 1.4310/301 [1.)]

1.) Material designation according to AISI

DTS 1000011017 EN Version: AE Status: RL (released | freigegeben | valide) printed: 15.01.2026

valvesgo.com

valvesgo.com

5. Dimensions

5.1. Standard variant

Threaded variant DN 12

Note:

- Dimensions in mm
- The dimensions D1 and F1 apply to G thread.
- The dimensions D2 and F2 apply to NPT thread.
- The dimensions D3 and F3 apply to Rc thread.

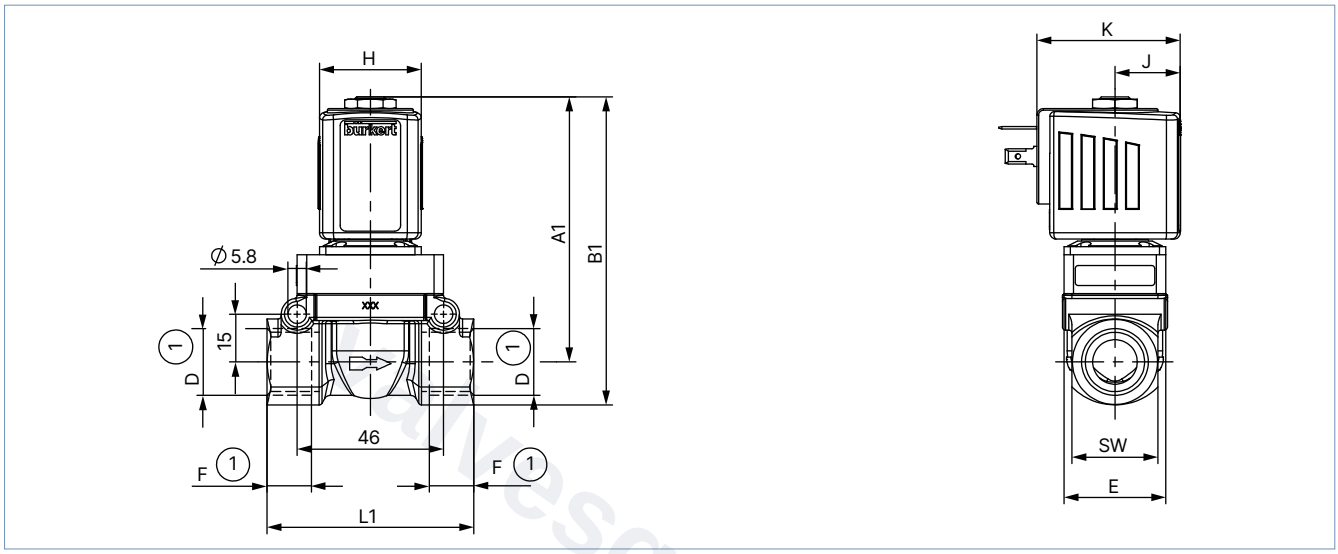

Coil size	DN	CF A		CF B		G thread		NPT thread		Rc thread		E	L1	SW	H	J	K
		A1	B1	A1	B1	D1	F1	D2	F2	D3	F3						
5	12.0	83	96.5	90.5	104	G ½	14	NPT ½	13.7	Rc ½	13.2	33	65	27	32	20.5	45
6	12.0	83	96.5	90.5	104	G ½	14	NPT ½	13.7	Rc ½	13.2	33	65	27	40	23.5	51

DTS 1000011017 EN Version: AE Status: RL (released | freigegeben | valide) printed: 15.01.2026

valvesgo.com

Threaded variant DN 20 and DN 25

Note:

- Dimensions in mm
- The dimensions D1 and F1 apply to G thread.
- The dimensions D2 and F2 apply to NPT thread.
- The dimensions D3 and F3 apply to Rc thread.

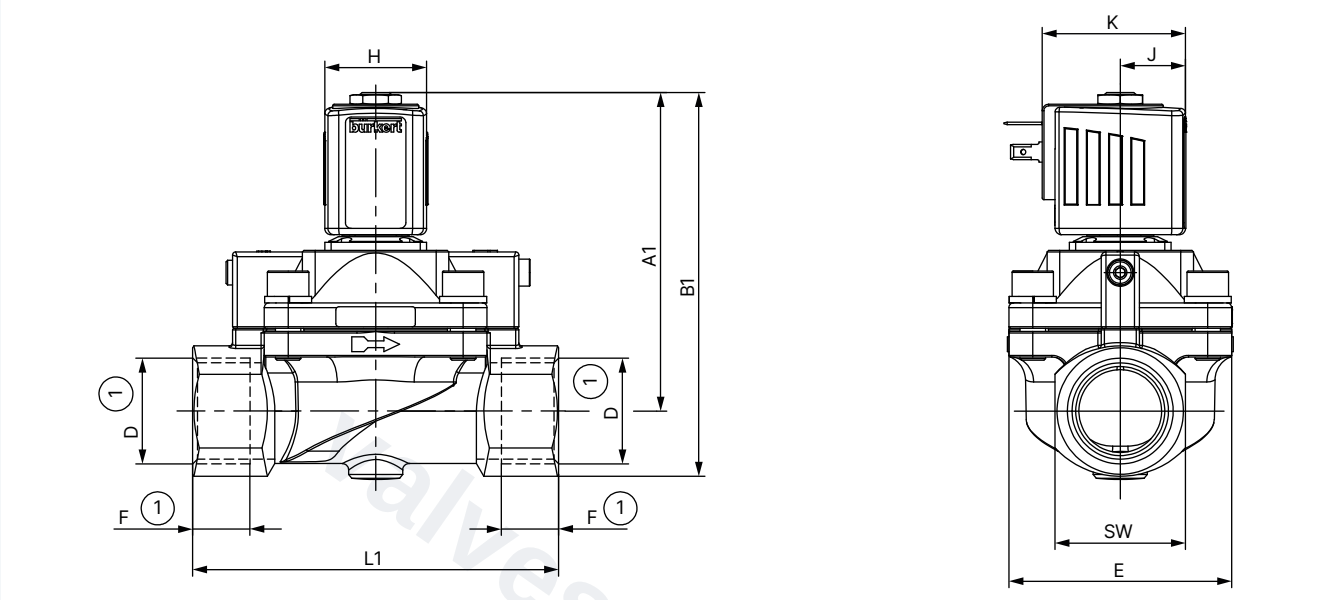

Coil size	DN	CF A		CF B		G thread		NPT thread		Rc thread		E	L1	SW	H	J	K
		A1	B1	A1	B1	D1	F1	D2	F2	D3	F3						
5	20.0	93	109	90.5	104	G ¾	16	NPT ¾	14	Rc ¾	14.5	60	100	32	32	20.5	45
	25.0	99.5	119			G 1	18	NPT 1	16.8	Rc 1	16.8	70	115	41			
6	20.0	93	109			G ¾	16	NPT ¾	14	Rc ¾	14.5	60	100	32	40	23.5	51
	25.0	99.5	119			G 1	18	NPT 1	16.8	Rc 1	16.8	70	115	41			

DTS 1000011017 EN Version: AE Status: RL (released | freigegeben | valide) printed: 15.01.2026

valvesgo.com

Threaded variant DN 32 and DN 50

Note:

- Dimensions in mm
- The dimensions D1 and F1 apply to G thread.
- The dimensions D2 and F2 apply to NPT thread.

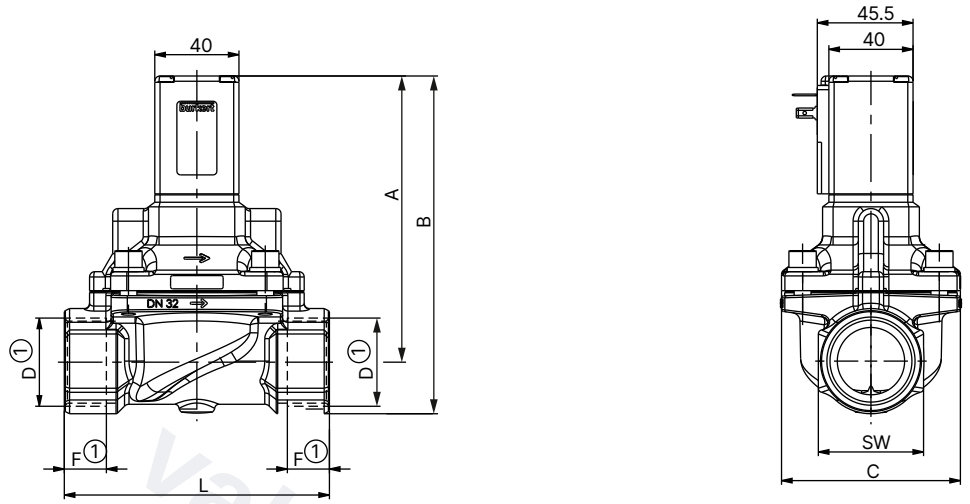

DN	A	B	G thread		NPT thread		C	L	SW
			D1	F1	D2	F2			
32	136	161	G 1¼	20	NPT 1¼	17.3	85	126	50
32	140	170	G 1½	22	NPT 1½	17.3	85	126	60
50	163	198	G 2	24	NPT 2	17.6	115	164	70

DTS 1000011017 EN Version: AE Status: RL (released | freigegeben | valide) printed: 15.01.2026

valvesgo.com

5.2. Steam variant NA07

Threaded variant DN 13

Note:

- Dimensions in mm
- The dimensions D1 and F1 apply to G thread.
- The dimensions D2 and F2 apply to NPT thread.
- The dimensions D3 and F3 apply to Rc thread.

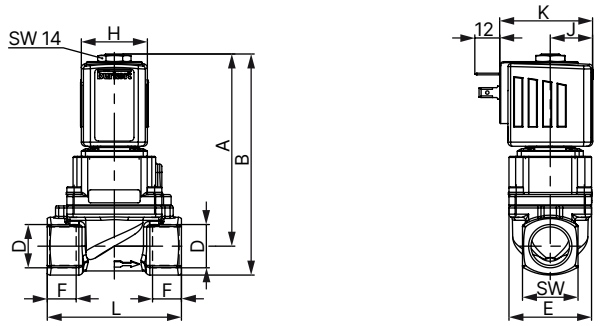

Coil size	DN	A	B	G thread		NPT thread		Rc thread		E	L	SW	H	J	K
				D1	F1	D2	F2	D3	F3						
5	13	93.1	107.1	G ½	14	NPT ½	13.7	Rc ½	13.2	40	65	27	32	20.5	45
6	13	93.1	107.1	G ½	14	NPT ½	13.7	Rc ½	13.2	40	65	27	40	23.5	51

Threaded variant DN 20 and DN 25

Note:

- Dimensions in mm
- The dimensions D1 and F1 apply to G thread.
- The dimensions D2 and F2 apply to NPT thread.
- The dimensions D3 and F3 apply to Rc thread.

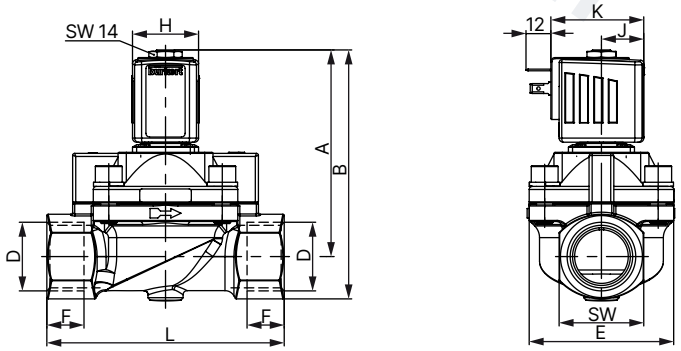

Coil size	DN	A	B	G thread		NPT thread		Rc thread		E	L	SW	H	J	K
				D1	F1	D2	F2	D3	F3						
5	20	96.1	112.1	G ¾	16	NPT ¾	14	Rc ¾	14.5	60	100	32	32	20.5	45
	25	100.1	120.6	G 1	18	NPT 1	16.8	Rc 1	16.8	70	115	41			
6	20	96.1	112.1	G ¾	16	NPT ¾	14	Rc ¾	14.5	60	100	32	40	23.5	51
	25	100.1	120.6	G 1	18	NPT 1	16.8	Rc 1	16.8	70	115	41			

DTS 1000011017 EN Version: AE Status: RL (released | freigegeben | valide) printed: 15.01.2026

valvesgo.com

Flange variant DN 25

Note:
Dimensions in mm

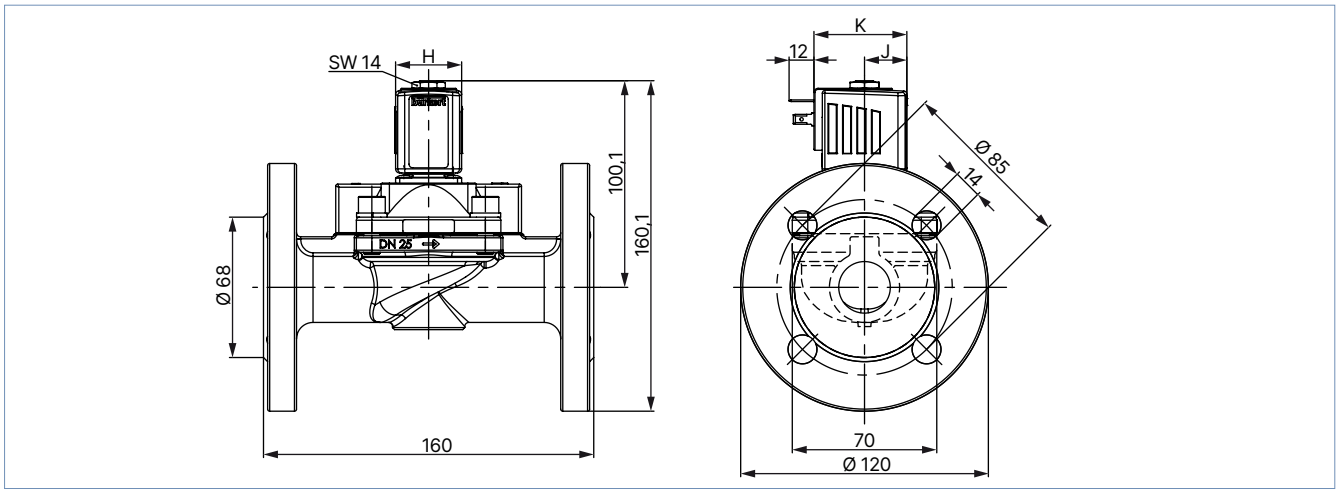

Coil size	DN	E	H	J	K
5	25	70	32	20.5	45
6	25	70	40	23.5	51

Threaded variant DN 32 and DN 40

- Dimensions in mm
- The dimensions D1 and F1 apply to G thread.
- The dimensions D2 and F2 apply to NPT thread.

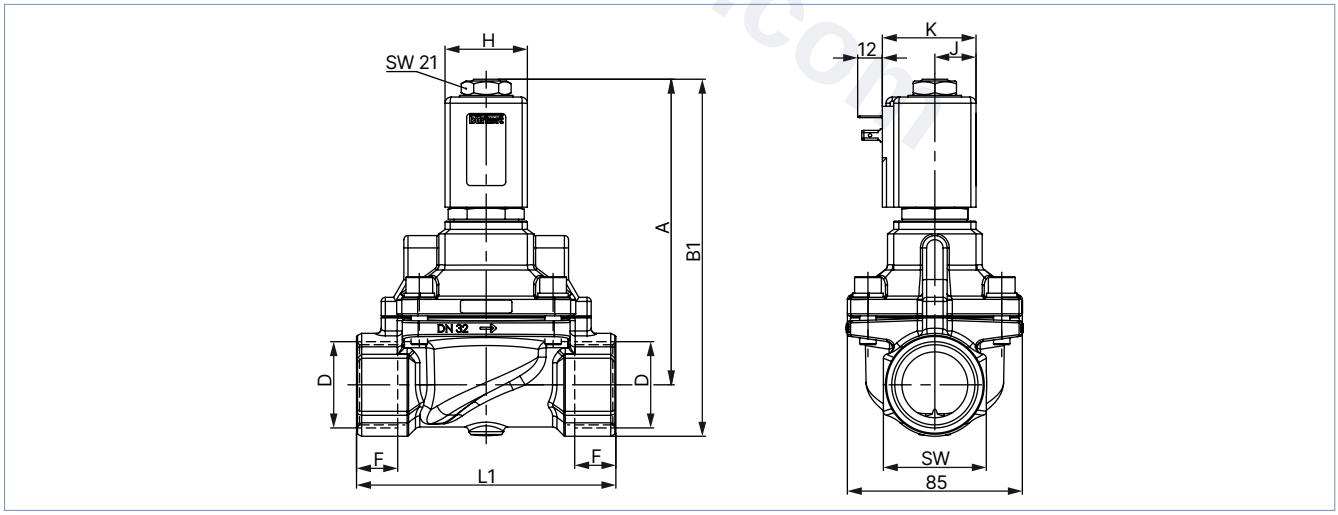

Coil size	DN	A	B1	G thread		NPT thread		L	B2	C	G	L2	M	SW	H	J	K
				D1	F1	D2	F2										
C	32	148	173	G 1¼	20	NPT 1¼	17.3	126	218	78	140	180	100	50	40	20	45
	40	153	181	G 1½	22	NPT 1½	17.3	126	227	88	150	200	110	60			

DTS 1000011017 EN Version: AE Status: RL (released | freigegeben | valide) printed: 15.01.2026

valvesgo.com

Flange variant DN 32 and DN 40

Note:
Dimensions in mm

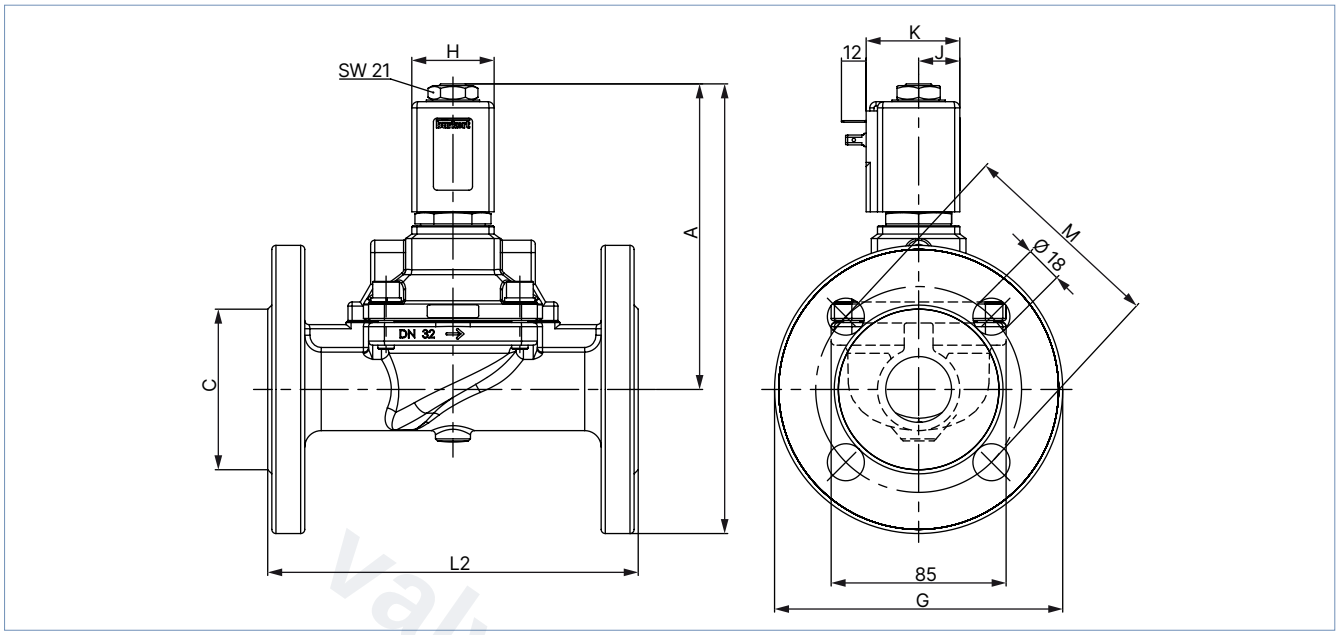

Coil size	DN	A	B1	C	G	L2	M	H	J	K
C	32	148	173	78	140	180	100	40	20	45
	40	153	181	88	150	200	110			

DTS 1000011017 EN Version: AE Status: RL (released | freigegeben | valide) printed: 15.01.2026

valvesgo.com

valvesgo.com

5.3. High pressure variant PN 08

Note:
Dimensions in mm

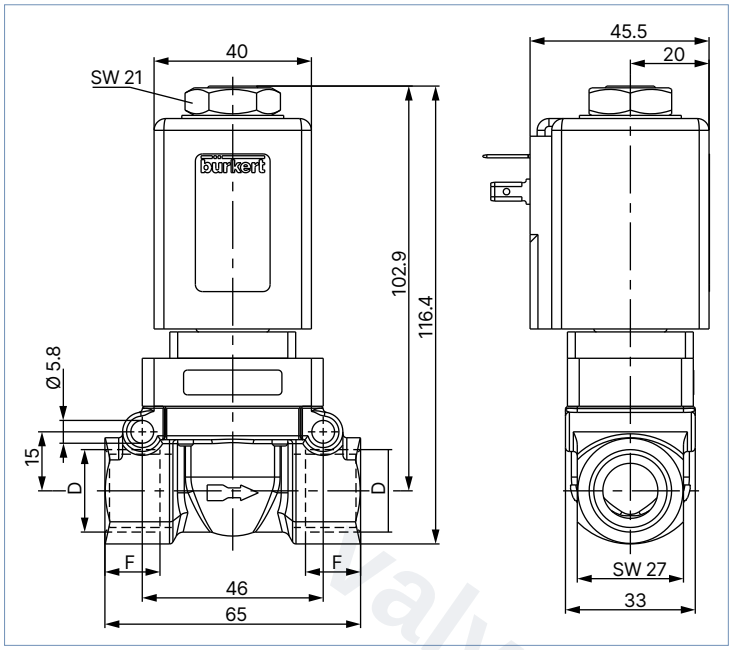

D	F
G ½	14
NPT ½	13.7

5.4. Discharge valve for compressor systems CF05

Plug variant with ventilation

Note:
Dimensions in mm

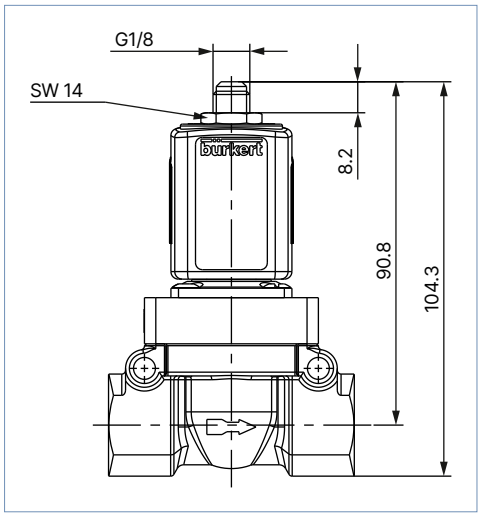

DTS 1000011017 EN Version: AE Status: RL (released | freigegeben | valide) printed: 15.01.2026

valvesgo.com

5.5. ATEX/IECEx variant

Cable variant

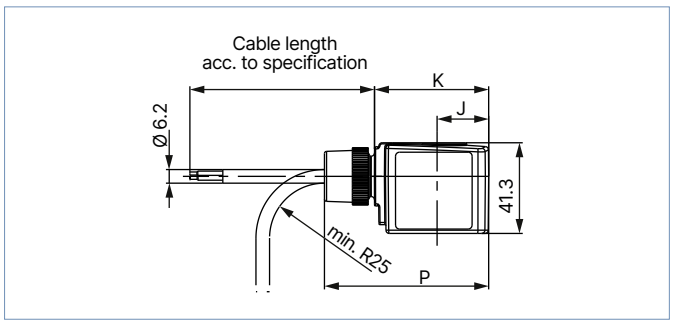

Terminal box variant

Note:

- Dimensions in mm
- The dimensions D1 and F1 apply to G thread.
- The dimensions D2 and F2 apply to NPT thread.
- The dimensions D3 and F3 apply to Rc thread.

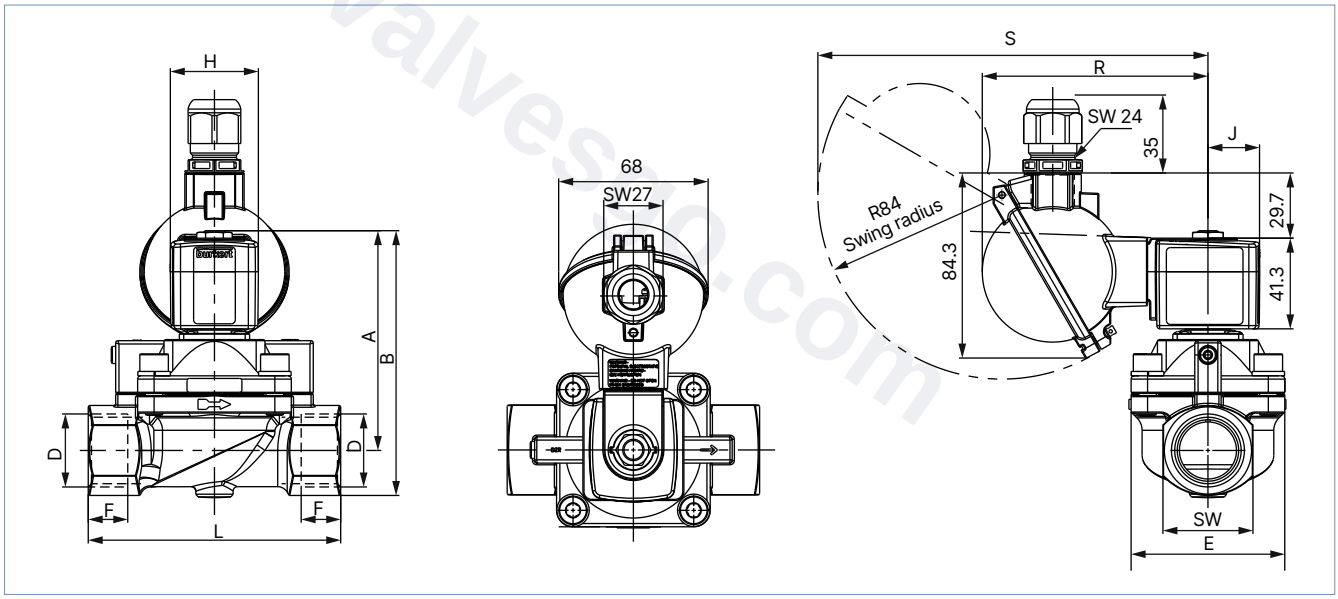

Coil size	DN	CF A		CF B		G thread		NPT thread		Rc thread		E	L	SW	H	J	K	P	R	S
		A	B	A	B	D1	F1	D2	F2	D3	F3									
5	12	83	96.5	90.8	104.3	G ½	14	NPT ½	13.7	Rc ½	13.2	33	65	27	32	20.5	46	68.8	99.8	174.7
	20	93	109			G ¾	16	NPT ¾	14	Rc ¾	14.5	60	100	32						
	25	99.5	119			G 1	18	NPT 1	16.8	Rc 1	16.8	70	115	41						
6	12	83	96.5	90.8	104.3	G ½	14	NPT ½	13.7	Rc ½	13.2	33	65	27	40	23.5	52	74.8	102.8	177.7
	20	93	109			G ¾	16	NPT ¾	14	Rc ¾	14.5	60	100	32						
	25	99.5	119			G 1	18	NPT 1	16.8	Rc 1	16.8	70	115	41						

DTS 1000011017 EN Version: AE Status: RL (released | freigegeben | valide) printed: 15.01.2026

valvesgo.com

6. Performance specifications

6.1. Temperature/duty cycle derating diagram for steam variant NA07

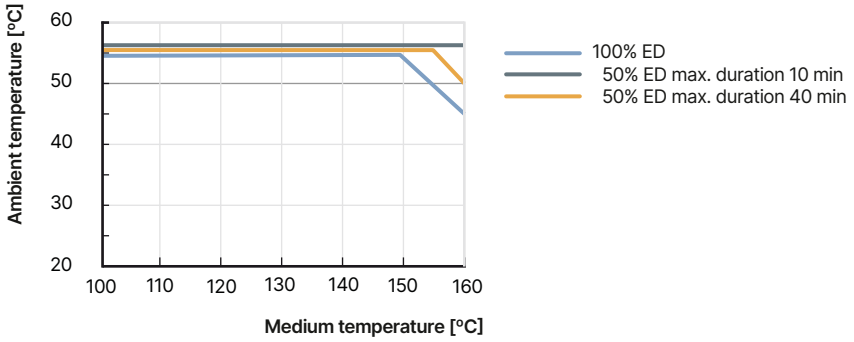

6.2. Characteristic values of intermittent operation

t_{SD} [s] = $\frac{60}{SH\left[\frac{1}{min}\right]}$

t_{ED} [s] = $\frac{ED[\%]}{100} \times t_{SD}$ [s]

t_{SP} [s] = t_{SD} [s] - t_{ED} [s]

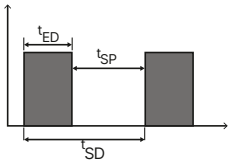

t_{SD} – Cycle time

t_{ED} – Duty cycle

t_{SP} – De-energized pause

ED – Relative duty cycle relative

SH – Switching frequency

7. Product accessories

7.1. Cable glands for ATEX/IECEx terminal box

Note:
A polyamide cable gland is included in the scope of delivery. A nickel-plated brass variant can be ordered for a surcharge, see **"Cable glands for ATEX/IECEx terminal box" on page 25**.

Description	Ex approval		Dimensions	
	Certification	Identification		
Ex cable gland, nickel-plated brass, 6...13 mm 	PTB 04 ATEX 1112 X, IECEx PTB 13.0027X	II 2 G Ex e IIC Gb, II 2 D Ex tb IIIC Db IP68	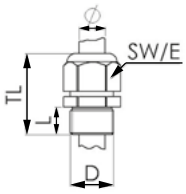	TL 29...37 mm L 6 mm D 20 mm SW 24 mm E 27 mm
Ex cable gland, polyamide, 7...13 mm 	PTB 13 ATEX 1015 X, IECEx PTB 13.0034X	II 2 G Ex e IIC Gb, II 2 D Ex tb IIIC Db IP68	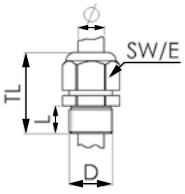	TL 36...45 mm L 10 mm D 20 mm SW 24 mm E 28 mm

DTS 1000011017 EN Version: AE Status: RL (released | freigegeben | valide) printed: 15.01.2026

valvesgo.com

7.2. Special tool to turn the terminal box

Note:
This special tool is not included in the scope of delivery of the valve, see "Cable glands for ATEX/IECEx terminal box" on page 25.

Description	Components of the set
Set SC02-AC10 	• Special tool • Service manual

8. Ordering information

8.1. Bürkert eShop

Bürkert eShop – Easy ordering and quick delivery

You want to find your desired Bürkert product or spare part quickly and order directly? Our online shop is available for you 24/7. Sign up and enjoy all the benefits.

Order online now

8.2. Bürkert product filter

Bürkert product filter – Get quickly to the right product

You want to select products comfortably based on your technical requirements?
Use the Bürkert product filter and find suitable articles for your application quickly and easily.

Try out our product filter

8.3. Bürkert Product Enquiry Form

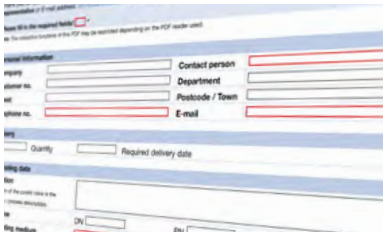

Bürkert Product Enquiry Form – Your enquiry quickly and compactly

Would you like to make a specific product enquiry based on your technical requirements? Use our Product Enquiry Form for this purpose. There you will find all the relevant information for your Bürkert contact. This will enable us to provide you with the best possible advice.

Fill out the form now

DTS 1000011017 EN Version: AE Status: RL (released | freigegeben | valide) printed: 15.01.2026

valvesgo.com

8.4. Ordering chart

Standard variant DN 12...DN 25

Note:

- Other variants are available on request.
- Please note that the cable plug must be ordered separately, see "8.5. Ordering chart accessories" on page 25 or separate data sheet **Type 2518** ▶.

Circuit function	Port connection	Orifice	K_V value water	Pressure range		Article no.		
				Liquids	Gases	024/DC	024/50	230/50
		[mm]	[m³/h]	[bar]	[bar]	[V/Hz]	[V/Hz]	[V/Hz]
Seal material PTFE/FKM								
CF A 2/2-way solenoid valve Servo-controlled Normally closed 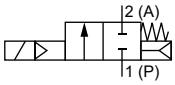	G ½	12	2.0	1...50	1...50	308501	177853	308502
	G ¾	20	7.0	1...25	1...32	308503	–	–
				1...25	1...40	–	308504	308505
	G 1	25	10.0	1...25	1...32	308506	–	–
				1...25	1...40	–	308507	308508
CF B 2/2-way solenoid valve Servo-controlled Normally open 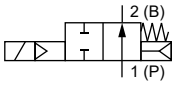	G ½	12	2.0	1...32	1...32	309022	301170	295636
	G ¾	20	7.0	1...25	1...25	303209	295276	295651
	G 1	25	10.0	1...25	1...25	295660	308120	301740

– = not available

Standard variant DN 32...DN 50

Circuit function	Port connection	Orifice	K_V value water	Pressure range		Article no.		
				Liquids	Gases	024/DC	024/50	230/50
		[mm]	[m³/h]	[bar]	[bar]	[V/Hz]	[V/Hz]	[V/Hz]
Seal material PTFE/FKM								
CF A 2/2-way solenoid valve Servo-controlled Normally closed 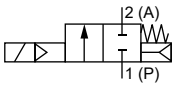	G 1¼	32	18.0	1...16	1...16	122579	–	–
				1...25	1...25	–	085337	085340
	G 1½	40	18.0	1...16	1...16	085343	–	–
				1...25	1...25	–	085342	085345
	G 2	50	36.0	1...8	1...8	307475	–	–
				1...20	1...20	–	307476	085350

– = not available

DTS 1000011017 EN Version: AE Status: RL (released | freigegeben | valide) printed: 15.01.2026

valvesgo.com

Steam variant NA07, DN 13...DN 25

Note:

- Please note that the cable plug must be ordered separately, see "8.5. Ordering chart accessories" on page 25 or separate data sheet **Type 2518** ▶.
- Due to the temperature range, the cable plug with silicone seal is provided for steam variants NA07.
- Please also note the derating diagram, see "6.1. Temperature/duty cycle derating diagram for steam variant NA07" on page 19.

Circuit function	Port connection	Orifice	K_V value water	Pressure range	Max. medium temperature	Body material	Article no.		
							024/DC	024/50	230/50
		[mm]	[m³/h]	[bar]	[°C]		[V/Hz]	[V/Hz]	[V/Hz]
Seal material PTFE/graphite									
CF A 2/2-way solenoid valve Servo-controlled Normally closed 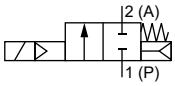	G ½	13	3.7	1...5	150	Brass	307267	–	–
				1...12		Brass	–	307269	307276
				1...12	180	Brass	–	20004404	20004405
	G ¾	20	7.0	1...5	150	Brass	307286	–	–
				1...12		Brass	–	307284	307326
				1...12	180	Brass	–	20004406	20004407
	G 1	25	10.0	1...5	150	Brass	307342	–	–
				1...12		Brass	–	307343	307351
				1...12	180	Brass	–	20004409	20004410
	Flange acc. to DIN EN 1902 - 1	25	10.0	1...5	150	Stainless steel	354392	–	–
				1...12		Stainless steel	–	20004413	354392
				1...12	180	Stainless steel	–	20004411	20004412

– = not available

Steam variant NA07, DN 32...DN 40

Note:

- Please note that the cable plug must be ordered separately, see "8.5. Ordering chart accessories" on page 25 or separate data sheet **Type 2518** ▶.
- Due to the temperature range, the cable plug with silicone seal is provided for steam variants NA07.
- Please also note the derating diagram, see "6.1. Temperature/duty cycle derating diagram for steam variant NA07" on page 19.

Circuit function	Port connection	Orifice	K_V value water	Pressure range	Body material	Article no.		
						024/DC	024/50	230/50
		[mm]	[m³/h]	[bar]		[V/Hz]	[V/Hz]	[V/Hz]
Seal material PTFE/graphite								
CF A 2/2-way solenoid valve Servo-controlled Normally closed 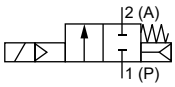	G 1¼	32	18.0	1...4	Brass	316584	–	–
				1...12	Brass	–	316580	316579
	Flange acc. to DIN EN 1902 - 1	32	18.0	1...4	Stainless steel	o. r.	–	–
				1...12	Stainless steel	–	o. r.	363040
	G 1½	40	18.0	1...4	Brass	316592	–	–
				1...12	Brass	–	316586	316588
	Flange acc. to DIN EN 1902 - 1	40	18.0	1...4	Stainless steel	o. r.	–	–
				1...12	Stainless steel	–	370111	363041

– = not available
o. r. = on request

DTS 1000011017 EN Version: AE Status: RL (released | freigegeben | valide) printed: 15.01.2026

valvesgo.com

High pressure variant PN 08

Note:

- Please note that the cable plug must be ordered separately, see "8.5. Ordering chart accessories" on page 25 or separate data sheet **Type 2518** ▶.
- High shut off levels may occur with liquids and high differential pressure!
- Please note: fluids and high differential pressure may cause high pressure surges.

Circuit function	Port connection	Orifice	K_v value water	Pressure range		Article no.		
				Liquids	Gases	024/DC	024/50	230/50
		[mm]	[m³/h]	[bar]	[bar]	[V/Hz]	[V/Hz]	[V/Hz]
Seal material PTFE/FKM								
CF A 2/2-way solenoid valve Servo-controlled Normally closed 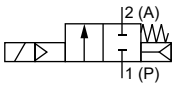	G ½	12	2.0	1...80	1...80	304191	304193	304194

Discharge valve for compressor systems CF05

Circuit function	Port connection	Orifice	K_v value water	Pressure range		Article no.		
				Liquids	Gases	024/DC	024/50	230/50
		[mm]	[m³/h]	[bar]	[bar]	[V/Hz]	[V/Hz]	[V/Hz]
CF B 2/2-way solenoid valve Servo-controlled Normally open 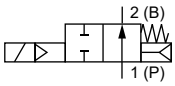	G ½	12	2.0	1...40	1...40	301723	308781	308783

valvesgo.com

DTS 1000011017 EN Version: AE Status: RL (released | freigegeben | valide) printed: 15.01.2026

valvesgo.com

ATEX/IECEx cable variant

Note:
The pressure values for liquid media are shown on the rating plate.

Circuit function	Port connection	Orifice	K_V value water	Pressure range		Article no.	
				Liquids	Gases	24 / AC/DC	230 / AC/DC
		[mm]	[m³/h]	[bar]	[bar]	[V/Hz]	[V/Hz]
Seal material PTFE/FKM							
CF A 2/2-way solenoid valve Servo-controlled Normally closed 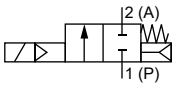	G ½	12	2.0	1...50	1...50	349290	349292
	G ¾	20	7.0	1...25	1...32	349294	349296
	G 1	25	10.0	1...25	1...32	349300	349301
CF B 2/2-way solenoid valve Servo-controlled Normally open 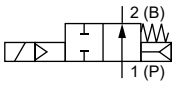	G ½	12	2.0	1...32	1...32	349302	349304
	G ¾	20	7.0	1...25	1...25	349307	349309
	G 1	25	10.0	1...25	1...25	349310	349313

ATEX/IECEx terminal box variant

Note:
- Please note that the cable plug must be ordered separately, see "8.5. Ordering chart accessories" on page 25 or separate data sheet **Type 2509** ▶.
- The pressure values for liquid media are shown on the rating plate.

Circuit function	Port connection	Orifice	K_V value water	Pressure range		Article no.	
				Liquids	Gases	24 / AC/DC	230 / AC/DC
		[mm]	[m³/h]	[bar]	[bar]	[V/Hz]	[V/Hz]
Seal material PTFE/FKM							
CF A 2/2-way solenoid valve Servo-controlled Normally closed 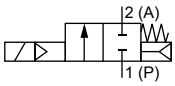	G ½	12	2.0	1...50	1...50	349289	349293
	G ¾	20	7.0	1...25	1...32	349295	349297
	G 1	25	10.0	1...25	1...32	349299	349297
CF B 2/2-way solenoid valve Servo-controlled Normally open 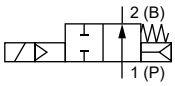	G ½	12	2.0	1...32	1...32	349303	349305
	G ¾	20	7.0	1...25	1...25	349306	349308
	G 1	25	10.0	1...25	1...25	349311	349312

Further variants on request

	Approval Further information can be found in chapter "3. Approvals and conformities" on page 5.		**Temperature** Special temperature ranges
	Process connection • NPT • UN		**Voltage** 110/50, further voltages on request

valvesgo.com

DTS 1000011017 EN Version: AE Status: RL (released | freigegeben | valide) printed: 15.01.2026

8.5. Ordering chart accessories

Cable plug Type 2518, form A according to DIN EN 175301 - 803

Note:

- Dimensions in mm
- For further variants see data sheet **Type 2518** ▶.

Cable plug	Dimensions	Variant	Voltage	Article no.
	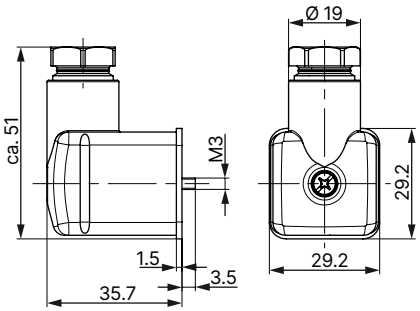	Without wiring (AC/DC)	0...250 V AC/DC	314802
		With LED (AC/DC)	12...24 V AC/DC	314812
		With LED and varistor (AC/DC)	12...24 V AC/DC	314820
		With rectifier, LED and varistor	12...24 V AC/DC	314816
		Without wiring (AC/DC) with silicone seal for higher ambient temperature, e.g. steam variant (NA07)	0...250 V AC/DC	361687

Cable plug Type 2509, form A according to DIN EN 175301 - 803

Note:

- Dimensions in mm
- Without wiring (standard)
- The cable plug Type 2509 meets the requirements of ATEX Cat. 3 GD in assembly with a Bürkert solenoid valve.
- The cable plug Type 2509 meets the requirements of UL Listed (UL 429) in assembly with a Bürkert solenoid valve.
- Refer to data sheet **Type 2509** ▶ for more information about the cable plug.

Cable plug	Dimensions	Variant	Voltage	Article no.
	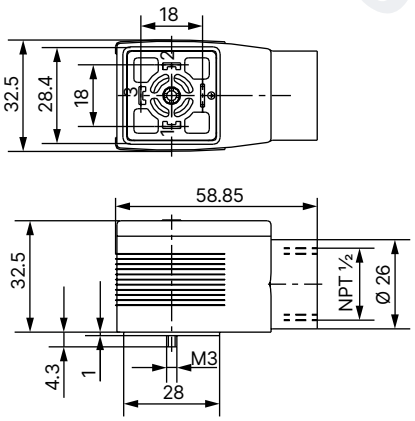	Without wiring	0...250 V AC/DC	137943

Cable glands for ATEX/IECEx terminal box

Note:

- A polyamide cable gland is included in the scope of delivery. A nickel-plated brass variant can be ordered for a surcharge.
- Refer to "7.1. Cable glands for ATEX/IECEx terminal box" on page 19 for more information about Ex cable glands.
- Refer to "7.2. Special tool to turn the terminal box" on page 20 for more information about special tool.

Description	Article no.
Ex cable gland, nickel-plated brass, 6...13 mm [1.)]	773278
Ex cable gland, polyamide, 7...13 mm [1.)]	773277
Set SC02-AC10: special tool [2.)] incl. service manual	293488

1.) Cable diameter
2.) Not included in the scope of delivery of the valve

DTS 1000011017 EN Version: AE Status: RL (released | freigegeben | valide) printed: 15.01.2026

valvesgo.com