bürkert
FLUID CONTROL SYSTEMS

MAN 1000334460 EN Version: F Status: RL (released | freigegeben) printed: 03.08.2026

Type 5404

2/2-way solenoid valve

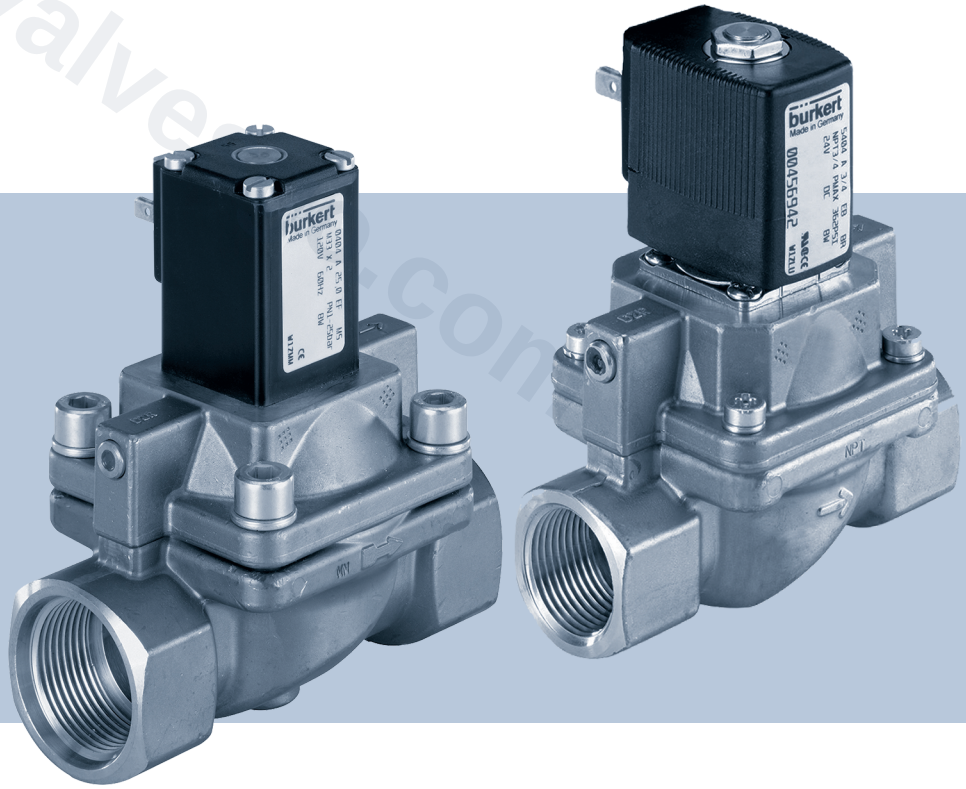

Operating Instructions

valvesgo.com

MAN 1000334460 EN Version: F Status: RL (released | freigegeben) printed: 03.08.2026

valvesgo.com

We reserve the right to make technical changes without notice.
© Bürkert Werke GmbH & Co. KG 2017-2025
Technical documentation 2512/05_GBen_00810634_1010780811_9007200265672075 / Original DE

Table of contents

1 About this document 4
1.1 Symbols 4
1.2 Terms and abbreviations 5
1.3 Manufacturer 5

2 Safety 6
2.1 Intended use 6
2.2 Basic safety instructions 6

3 Technical data 8
3.1 Standards and directives 8
3.2 Operating conditions 8
3.3 Usage conditions 9
3.4 Type label 12

4 Installation 13
4.1 Safety instructions 13
4.2 Before installation 13
4.3 Installation 13
4.4 Electrical connection of cable plug 14

5 Maintenance, troubleshooting 15
5.1 Safety instructions 15
5.2 Solenoid installation 15
5.3 Troubleshooting 16

6 Spare parts 17
6.1 Ordering spare parts 17
6.2 Tightening torques 18

7 Logistics 19
7.1 Transport and storage 19
7.2 Return 19
7.3 Disposal 19

MAN 1000334460 EN Version: F Status: RL (released | freigegeben) printed: 03.08.2026

valvesgo.com

valvesgo.com

1 About this document

The document is an important part of the product and guides the user to safe installation and operation. The information and instructions in this document are binding for the use of the product.

- Before using the product for the first time, read and observe the whole safety chapter.
- Before starting any work on the product, read and observe the respective sections of the document.
- Keep the document available for reference and give it to the next user.
- Contact the Bürkert sales office for any questions.

Further information concerning the product at Products.

- Enter the article number from the type label in the search bar.

The illustrations in these instructions may vary depending on the product variant.

1.1 Symbols

DANGER!

Warns of a danger that leads to death or serious injuries.

WARNING!

Warns of a danger that can lead to death or serious injuries.

CAUTION!

Warns of a danger that can lead to minor injuries.

NOTICE!

Warns of property damage on the product or the installation.

Indicates important additional information, tips and recommendations.

Refers to information in this document or in other documents.

- Indicates a step to be carried out.

✓ Indicates a result.

Menu Indicates a software user-interface text.

MAN 1000334460 EN Version: F Status: RL (released | freigegeben) printed: 03.08.2026

valvesgo.com

1.2 Terms and abbreviations

The terms and abbreviations are used in this document to refer to following definitions.

Product	Solenoid valve Type 5404

1.3 Manufacturer

Bürkert Fluid Control Systems

Christian-Bürkert-Str. 13–17

74653 Ingelfingen

GERMANY

The contact addresses are available at Contact.

Need more information or additional products?

- Explore the full range of products on our eShop.

valvesgo.com

MAN 1000334460 EN Version: F Status: RL (released | freigegeben) printed: 03.08.2026

valvesgo.com

2 Safety

2.1 Intended use

Improper use of the Type 5404 solenoid valve may be dangerous to people, nearby equipment and the environment.

- The device is designed for controlling, shutting off and dosing neutral media with a viscosity of up to 21 mm2/s.
- In the potentially explosive atmosphere, only use devices that are approved for this purpose. These devices are identified by a separate Ex type label. Before use, note the information on the separate Ex type label and the Ex additional instructions or the separate Ex operating Instructions.
- With a properly connected and assembled cable plug, the device complies with degree of protection IP65 in accordance with DIN EN 60529 / IEC 60529.
- When using the device, observe the authorised data, and the operating and usage conditions specified in the contract documents and in the operating instructions.
- Prerequisites for safe and trouble-free operation are correct transport, storage and installation as well as careful operation and maintenance.
- Use the device only as intended.

2.2 Basic safety instructions

These safety instructions do not take into account any unforeseen circumstances or events that occur during installation, operation or maintenance. The operator is responsible for observing the location-specific safety regulations, also with reference to personnel.

Risk of injury from high pressure

- Before working on the system or device, switch off the pressure and ventilate or empty the lines.

Risk of injury from electric shock

- Before working on the system or device, switch off the power supply and secure against reactivation.
- Observe the applicable accident prevention and safety regulations for electrical devices.

Risk of burns/fire due to hot device surface if device operated continuously

- Keep the device away from highly flammable substances and media and do not touch with bare hands.

Risk of injury from malfunctioning valves with alternating current (AC)

A seized core will cause the solenoid to overheat, which leads to functional failure.

- Monitor the working process for proper function.

Risk of short circuit/escape of medium due to leaking fittings

- Make sure seats are properly seated.
- Screw valve and connection lines together carefully.

MAN 1000334460 EN Version: F Status: RL (released | freigegeben) printed: 03.08.2026

valvesgo.com

General dangerous situations

To prevent injuries, observe the following:

- Use the device only when it is in perfect condition and in accordance with the operating instructions.
- Do not make any modifications to the device and do not subject it to mechanical stress.
- Secure device or system to prevent unintentional activation.
- Ensure that only trained technicians carry out installation and maintenance work.
- Install the device according to the regulations applicable in the respective country.
- After an interruption in the power supply, ensure that the process is restarted in a controlled manner.
- Comply with the generally accepted engineering standards.

MAN 1000334460 EN Version: F Status: RL (released | freigegeben) printed: 03.08.2026

valvesgo.com

3 Technical data

3.1 Standards and directives

This product complies with the legal requirements applicable at the time of placing on the market and has been developed and tested in accordance with the relevant European directives/regulations and harmonized standards. The conformity is documented and, if necessary, supported by evidence. The EU Declaration of Conformity can be found behind the respective type on the home page country.burkert.com

3.2 Operating conditions

The following values are indicated on the type label (see Type label):

- Voltage (tolerance ± 10%) / current type
- Solenoid power (active power in W at operating temperature)
- Pressure range
- Body material
  Brass (MS), grey cast iron (GG)
- Seal material: PTFE + FKM (EF), PTFE + EPDM (EA), PTFE + graphite (EG), EPDM + graphite (AG)

Ambient temperature	max. +55°C
Storage temperature	-40...+80 °C
Degree of protection	IP65 in accordance with DIN EN 60529/IEC 60529 with cable plug, e.g. Bürkert Type 2518
A (NC)	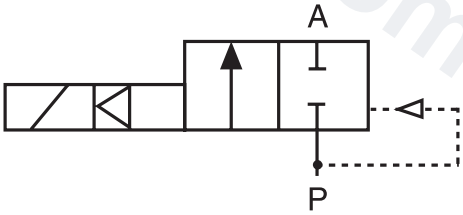
B (NO)	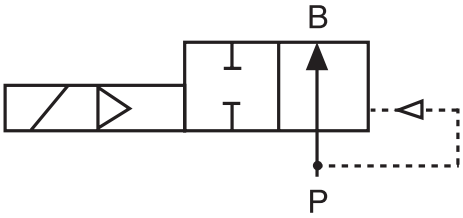

MAN 1000334460 EN Version: F Status: RL (released | freigegeben) printed: 03.08.2026

valvesgo.com

Special instructions for valves circuit function B (NO) with exhaust port G1/8 on the solenoid (CF05):

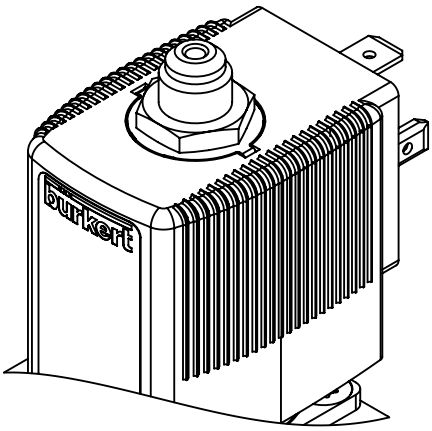

The valve is open when there is no power. The medium also flows out via the exhaust port on the solenoid .
Valves of this type are therefore only suitable for compressor relief.

3.3 Usage conditions

Solenoid material	Type	Seal material	Medium temperature
Epoxide	5404 NA38	PTFE/FKM	–10...+120 °C
Epoxide	5404 NA38	PTFE + EPDM	–30...+130 °C
Epoxide	5404 NA07 + NA38	PTFE + graphite	-40...+160°C [1]
Epoxide	5404 NA07 + NA38	PTFE + graphite	-30...+135 °C
Polyamide	5404	PTFE/FKM	–10...+100 °C

Tab. 1: Permissible medium temperature depending on solenoid material and seal material:

NA38: solenoid for higher temperatures
NA07: steam version

[1] Observe temperature derating for steam variant NA07.

MAN 1000334460 EN Version: F Status: RL (released | freigegeben) printed: 03.08.2026

valvesgo.com

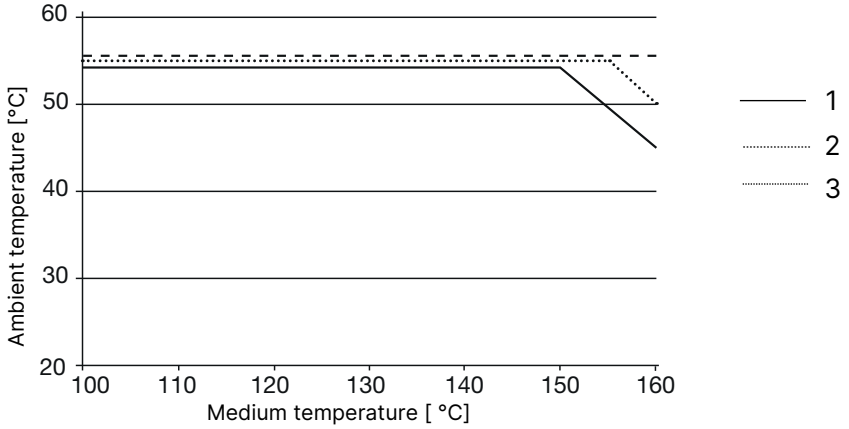

1	100% duty cycle	2	50% duty cycle max. cycle time 40 min
3	50% duty cycle max. cycle time 10 min		

Intermittent operation parameters

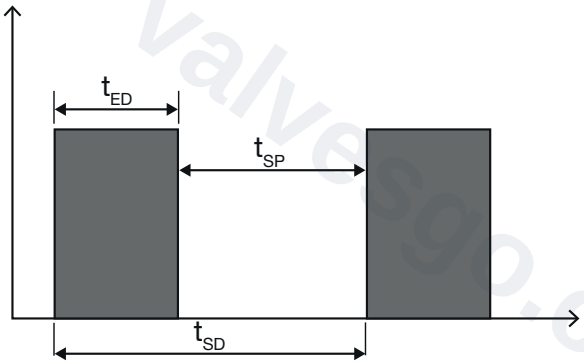

$$t_{SD}[s] = \frac{60}{SH\left[\frac{1}{min}\right]}$$

$$t_{ED}[s] = \frac{ED[\%]}{100} \times t_{SD}[s]$$

$$t_{SP}[s] = t_{SD}[s] - t_{ED}[s]$$

t_{SD} – cycle time
t_{ED} – duty cycle
t_{SP} – currentless break
ED – relative duty cycle
SH – switching frequency

MAN 1000334460 EN Version: F Status: RL (released | freigegeben) printed: 03.08.2026

valvesgo.com

For valves with UL/UR approval, please also note:

Media	Seal material description	Medium temperature	Ambient temperature
Air, inert gas	EF (PTFE + FKM)	–10...+110 °C	–10...+55 °C
Water		0...+100 °C	0...+55 °C
Water (fire protection service valve, var. code PE48)		+5...+90 °C	+5...+55 °C
Air, inert gas	EG (PTFE/graphite)	–40...+160 °C	–40...+45 °C
		–40...+150 °C	–40...+55 °C
water, steam (var. code NA07)	EG (PTFE/graphite)	0...+160 °C	0...+45 °C
		0...+150 °C	0...+55 °C
Oxygen (var. code NL02)	EF (PTFE + FKM)	–10...+60 °C	–10...+55 °C
No. 2 fuel oil		–10...+110 °C	–10...+55 °C

Unless otherwise specified on the type label, the solenoid actuator is suitable for continuous operation. Observe temperature derating for NA07 steam variants.

Important information to ensure functional reliability during continuous operation:
During long downtimes we recommend actuating at least 1–2 switching operations per day.

Service life: high switching frequency and high pressure will reduce overall service life.

Seal material	Permitted media
PTFE/FKM	Neutral media such as compressed air, water, hydraulic oil, oxygen, hot air[2], hot oils, oils with additives, per solutions
PTFE + EPDM	Cold and hot water, oil and grease-free media
PTFE + graphite	Hot water and steam

Tab. 2: Permissible media depending on the seal material

Fluids and high differential pressure may cause high pressure surges.

2) Only special version NL02

MAN 1000334460 EN Version: F Status: RL (released | freigegeben) printed: 03.08.2026

valvesgo.com

3.4 Type label

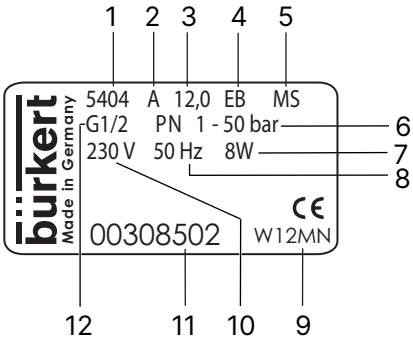

1	Type	2	Control function
3	Orifice	4	Sealing material
5	Body material	6	PN
7	Power	8	Frequency
9	Manufacture code	10	Voltage
11	Article number	12	Port connection

MAN 1000334460 EN Version: F Status: RL (released | freigegeben) printed: 03.08.2026

valvesgo.com

valvesgo.com

4 Installation

4.1 Safety instructions

DANGER!

Risk of injury due to high pressure and escaping medium

- Switch off the pressure before working on the device or system. Vent or drain the lines.

DANGER!

Risk of injury from electric shock

- Switch off the power supply before working on the device or system.
  Secure against reactivation.
- Observe the applicable accident prevention and safety regulations for electrical devices.

WARNING!

Risk of injury due to improper installation

- Installation must always be carried out by trained technicians with the appropriate tools.
- Secure the system against unintentional activation.
- Ensure a controlled restart after installation.

valvesgo.com

4.2 Before installation

Installation position: any, preferably actuator facing up.

- Clean pipes of dirt.
- Install a dirt trap upstream of the valve inlet (≤ 500 µm).

4.3 Installation

NOTICE!

Breaking hazard

- Do not use the solenoid as a lever arm.

- Hold the device on the body using an appropriate tool (e.g. open-end wrench) and screw into the pipeline.

The valve body must not be installed under tension. Seal material must not get into the device.

- Pay attention to flow direction:
  The arrow on the body indicates the flow direction.

MAN 1000334460 EN Version: F Status: RL (released | freigegeben) printed: 03.08.2026

4.4 Electrical connection of cable plug

DANGER!

Risk of injury from electric shock

Risk of electric shock if protective conductor not connected

- Before reaching into the device or the system, switch off the power supply and secure it against reactivation.
- Observe the applicable accident prevention and safety regulations for electrical devices.
- Always connect protective conductor and check electrical continuity between solenoid and body.

- Screw on the cable plug (see data sheet for approved types), observing the maximum tightening torque of 1 Nm.
- Check that the seal is properly fitted.
- Connect protective conductor and check electrical continuity between solenoid and body.

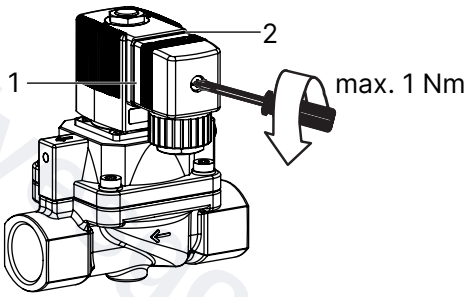

1	Approved cable plug, e.g. Type 2518 or other suitable cable plug in accordance with DIN EN 175301-803, form A	2	Seal

MAN 1000334460 EN Version: F Status: RL (released | freigegeben) printed: 03.08.2026

valvesgo.com

5 Maintenance, troubleshooting

5.1 Safety instructions

DANGER!

Risk of injury due to high pressure and escaping medium

- Switch off the pressure before working on the device or system. Vent or drain the lines.

WARNING!

Risk of injury due to improper maintenance work

- Maintenance may be carried out only by trained specialist technicians and with the appropriate tools.
- Secure the system against unintentional activation.
- Ensure a controlled restart after maintenance is completed.

5.2 Solenoid installation

WARNING!

Risk of injury from electric shock

If the protective conductor is not connected and the solenoid is incorrectly installed, there is a risk of electric shock.

- Before reaching into the device or the system, switch off the power supply and secure it against reactivation.
- After installing the solenoid, check the protective conductor.
- When installing, make sure that the solenoid is firmly seated on the housing lid so the protective conductor connection of the solenoid is connected to the valve body.

WARNING!

Risk of injury due to escaping medium

Medium may escape when a firmly fastened nut is loosened.

- Do not continue to rotate firmly fastened nuts.

WARNING!

Overheating, risk of fire.

Connecting the solenoid without first installing the valve will lead to overheating and will destroy the solenoid.

- Only connect the solenoid after the valve has been installed.

- Position the solenoid on the core guide tube.
- Screw on the solenoid with the nut. Observe the tightening torques in the following table.
- Check the protective conductor.

MAN 1000334460 EN Version: F Status: RL (released | freigegeben) printed: 03.08.2026

valvesgo.com

NOTICE!

Device damage due to incorrect tools

Using the wrong tools (such as pliers) can damage the device.

- Always screw on the nut with an open-end wrench.

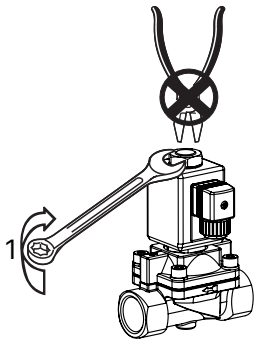

1 Note the tightening torque for the fixing nut (see table)

Type	DN	Tightening torques	Fixing the solenoid
5404	12...25	+4.5...+5.5	Nut
5404 MX13	12	15...16	Nut
5404	32...40	+1.3...+1.7	M4 screw
5404 NA07	32...40	15...16	Nut

5.3 Troubleshooting

If faults occur, check whether:

- the device is installed according to regulations,
- the electrical and fluid connections have been properly set up,
- the device is not damaged,
- all screws have been tightened,
- voltage and pressure have been applied,
- the pipelines are clean,
- the power supply is strong enough.

Possible causes when the valve does not switch:

- Short circuit or solenoid interrupted.
- Inadequate power supply,
- Core or core area contaminated,
- Medium pressure outside the permitted pressure range.

Possible cause if the valve does not close:

- Interior of the valve contaminated.

MAN 1000334460 EN Version: F Status: RL (released | freigegeben) printed: 03.08.2026

valvesgo.com

6 Spare parts

6.1 Ordering spare parts

CAUTION!

Risk of injury and/or damage to property due to incorrect parts

Incorrect accessories and unsuitable spare parts may cause injuries and damage the device and the surrounding area.

- Use only original accessories and original spare parts from Bürkert.

The following spare parts for the solenoid valve Type 5404 are available:

- Solenoid set; (item 1)
- pilot control wearing part set (item. 2)
- Armature wearing part set (item. 3)
- Order the spare parts sets, specifying the items and the identification number of the device.

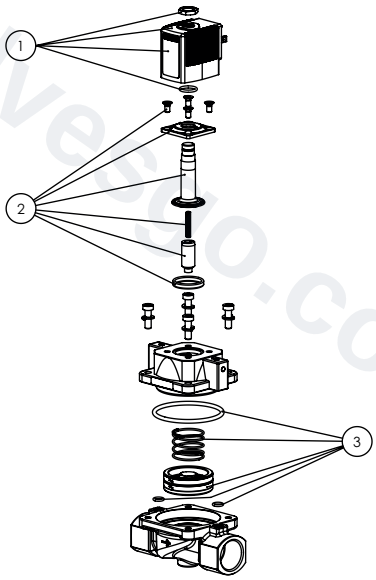

Fig. 1: Type 5404, DN12 to DN25

MAN 1000334460 EN Version: F Status: RL (released | freigegeben) printed: 03.08.2026

valvesgo.com

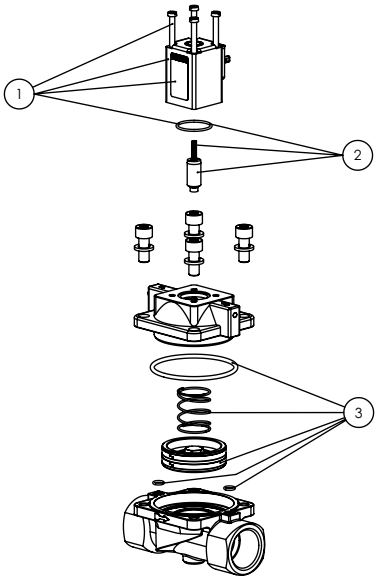

Fig. 2: Type 5404, DN32 to DN50

6.2 Tightening torques

Type	DN	Cover screw [Nm]	Flange screw
5404	12	2.1...2.3	2.1...2.3
5404 MX13	12	1.5...2.0	1.5...2.0
5404 NA07	13	3...4	1.5...2.0
5404	20	6...7	1.5...2.0
5404	25	9...11	1.5...2.0

Type	DN	Cover screw [Nm]	Block-screwed solenoid	Stopper with tube [Nm]
5404	32	9...11	+1.3...+1.7	-
5404 NA07	32	9...11	-	80...85
5404	40	9...11	+1.3...+1.7	-
5404 NA07	40	9...11	-	80...85

MAN 1000334460 EN Version: F Status: RL (released | freigegeben) printed: 03.08.2026

valvesgo.com

7 Logistics

7.1 Transport and storage

- Protect the device against moisture and dirt in the original packaging during transportation and storage.
- Avoid UV radiation and direct sunlight.
- Protect connections, if present, from damage with protective caps.
- Observe the permitted storage temperature.

7.2 Return

No work or tests will be carried out on the device until a valid Contamination Declaration has been received.

- To return a used device to Bürkert, contact the Bürkert sales office. A return number is required.

7.3 Disposal

Environmentally friendly disposal

- Follow national regulations regarding disposal and the environment.
- Collect electrical and electronic devices separately and dispose of them as special waste.

Further information at country.burkert.com

MAN 1000334460 EN Version: F Status: RL (released | freigegeben) printed: 03.08.2026

valvesgo.com

valvesgo.com